(50)

No. 00-1543-CFX Title: Festo Corporation, Petitioner
v.
Shoketsu Kinzoku Kogyo Kabushiki Co., Ltd., et al.

Docketed: April 9, 2001 Court: United States Court of Appeals for the Federal Circuit

Entry	Date	Proceedings and Orders
	Feb 9 2001	Application (00A698) to extend the time to file a petition for a writ of certiorari from February 27, 2001 to March 29, 2001, submitted to The Chief Justice.
	Feb 13 2001	Application (00A698) granted by the Chief Justice extending the time to file until March 29, 2001.
	Mar 16 2001	Application (00A698) to extend further the time to file a petition for a writ of certiorari from March 29, 2001 to April 28, 2001, submitted to The Chief Justice.
	Mar 20 2001	Application (00A698) granted by the Chief Justice extending the time to file until April 9, 2001.
	Apr 9 2001	Petition for writ of certiorari filed. (Response due May 9, 2001)
	Apr 9 2001	Appendix of petitioner Festo Corp. filed.
	Apr 27 2001	Brief amicus curiae of Association of Patent Law Firms filed.
	May 8 2001	Brief amicus curiae of Federation Internatl.Des Conseils En Propriete Industrielle filed.
	May 8 2001	Brief amicus curiae of Intellectual Property Law Association of Chicago filed.
	May 9 2001	Brief of respondent Shoketsu Kinzoku Kogyo Kabushiki Co.,Ltd. in opposition filed.
	May 9 2001	Brief amici curiae of International Business Machines Corporation, et al. filed.
	May 9 2001	Brief amicus curiae of Federal Circuit Bar Association filed.
	May 9 2001	Brief amicus curiae of American Intellectual Property Law Association filed.
	May 9 2001	Brief amicus curiae of Intellectual Property Creators filed.
	May 9 2001	Brief amicus curiae of Chamber of Commerce of the United States filed.
	May 9 2001	Brief amici curiae of Minnesota Mining and Manufacturing Company, et al. filed.
	May 9 2001	Brief amici curiae of Chiron Corporation, et al. filed.
	May 9 2001	Brief amici curiae of Massachusetts Institute of Technology, et al. filed.
	May 9 2001	Brief amicus curiae of Applera Corporation filed.
	May 21 2001	Reply brief of petitioner Festo Corporation filed.
	May 22 2001	DISTRIBUTED for Conference of June 7, 2001
	Jun 11 2001	REDISTRIBUTED for Conference of June 14, 2001
	Jun 18 2001	Petition GRANTED. SET FOR ARGUMENT January 8, 2002. **********
	Jul 5 2001	Order extending time to file the joint appendix and petitioner's brief on the merits to and including August 31, 2001.
	Aug 28 2001	Brief amicus curiae of Vincent P. Tassinari filed.

3 pp

Entry	Date	Proceedings and Orders
	Aug 29 2001	Brief amicus curiae of Sean Patrick Suiter filed.
	Aug 30 2001	Brief amicus curiae of Federation Internatl.Des Conseils En Propriete Industrielle filed.
	Aug 31 2001	Brief amicus curiae of Litton Systems, Inc. filed.
	Aug 31 2001	Brief amicus curiae of United States filed.
	Aug 31 2001	Brief of petitioner Festo Corp. filed.
	Aug 31 2001	Brief amici curiae of Intellectual Property Creators, et al. filed.
	Aug 31 2001	Brief amicus curiae of Houston Intectual Property Law Association filed.
	Aug 31 2001	Brief amicus curiae of American Intellectual Property Law Association filed.
	Aug 31 2001	Brief amicus curiae of Federal Circuit Bar Association filed.
	Aug 31 2001	Brief amicus curiae of ASTA Medic Aktiengesellschaft filed.
	Aug 31 2001	Brief amicus curiae of American Bar Association filed.
	Aug 31 2001	Brief amici curiae of Wisconsin Alumni Research Foundation, et al. filed.
	Aug 31 2001	Brief amicus curiae of National Bar Association filed.
	Aug 31 2001	Brief amicus curiae of Patent, Trademark, & Copyright Section of Bar Assoc. of D.C. filed.
	Aug 31 2001	Joint appendix filed.
	Aug 31 2001	Joint appendix filed in two volumes (vol.2 is an 8 1/2 x11 size booklet).
	Aug 31 2001	Brief amicus curiae of National Intellectual Property Law Institute filed.
	Aug 31 2001	Brief amicus curiae of Institute of Electrical and Electronic Engineers filed.
	Aug 31 2001	Brief amicus curiae of Chiron Corporation filed.
	Aug 31 2001	Brief amicus curiae of Bose Corporation filed.
	Aug 31 2001	Brief amici curiae of Minnesota Mining And Manufacturing Company, et al. filed.
	Aug 31 2001	Brief amicus curiae of Celltech Group PLC. filed.
	Aug 31 2001	Brief amicus curiae of Philadelphia Intellectual Property Law Association filed.
	Aug 31 2001	LODGING consisting of twenty sets of nine documents submitted by counsel for amicus ASTA Medica Aktiengesellschaft.
	Sep 14 2001	Order extending time to file respondents' brief on the merits to and including October 31, 2001.
	Oct 31 2001	Brief of respondents Shoketsu Kinzoku Kogyo Kabushiki Co., et al. filed.
	Oct 31 2001	Brief amicus curiae of Consumer Project on Technology filed.
	Oct 31 2001	Brief amici curiae of International Business Machines Corporation, et al. filed.
	Oct 31 2001	Brief amicus curiae of Applera Corporation filed.
	Oct 31 2001	Brief amicus curiae of Genentech, Inc. filed.
	Oct 31 2001	Brief amici curiae of Intel Corporation, et al. filed.
	Oct 31 2001	Brief amicus curiae of Medimmune, Inc. filed.
	Nov 6 2001	Motion of the Solicitor General for leave to participate in oral argument as amicus curiae and for divided argument filed.
	Nov 8 2001	CIRCULATED.
	Nov 30 2001	Motion of the Solicitor General for leave to participate in oral argument as amicus curiae and for divided argument DISTRIBUTED.
	Nov 30 2001	Reply brief of petitioner Festo Corp. filed.
	Dec 3 2001	Motion of the Solicitor General for leave to participate in oral argument as amicus curiae and for divided argument GRANTED.
	Jan 8 2002	ARGUED.

FILED

001543 APR 9 2001

OFFICE OF THE CLERK

-No. 00-

IN THE

Supreme Court of the United States

OCTOBER TERM, 2000

FESTO CORPORATION,

Petitioner,

v.

SHOKETSU KINZOKU KOGYO KABUSHIKI CO., LTD., A/K/A SMC CORPORATION AND SMC PNEUMATICS, INC.,

Respondents.

Petition for Writ of Certiorari to the United States Court of Appeals for the Federal Circuit

PETITION FOR WRIT OF CERTIORARI

CHARLES R. HOFFMANN
HOFFMANN & BARON, LLP
6900 Jericho Turnpike
Syosset, New York 11791
(516) 822-3550

ROBERT H. BORK
Counsel of Record
Suite 1000
1150 17th Street, N.W.
Washington, D.C. 20036
(202) 862-5851

Counsel for Petitioner Festo Corporation

April 9, 2001

QUESTIONS PRESENTED

The doctrine of equivalents prevents a copyist from avoiding infringement by making unimportant and insubstantial changes to a patented invention. This Court unanimously affirmed this well-established doctrine four Terms ago in *Warner-Jenkinson Co. v. Hilton Davis Chemical Co.*, 520 U.S. 17 (1997).

The United States Court of Appeals for the Federal Circuit, in a fractured *en banc* decision, has now held that *any* amendment that narrows a patent claim and is related to any statutory requirement for patentability—regardless of the reason—gives rise to a prosecution history estoppel that generates an absolute bar to the doctrine of equivalents.

This is new law and works a drastic change in the American patent system.

The questions presented, therefore, are:

1) Whether every claim-narrowing amendment designed to comply with any provision of the Patent Act—including those provisions not related to prior art—automatically creates prosecution history estoppel regardless of the reason for the amendment; and

2) Whether the finding of prosecution history estoppel completely bars the application of the doctrine of equivalents.

PARTIES TO THE PROCEEDING

Petitioner, Festo Corporation, has no parent company.

There are no subsidiaries or affiliates of Festo Corporation that have issued shares to the public.

TABLE OF CONTENTS

Page

QUESTIONS PRESENTED i

PARTIES TO THE PROCEEDING ii

TABLE OF AUTHORITIES iv

OPINIONS BELOW 1

JURISDICTION 1

CONSTITUTIONAL AND STATUTORY PROVISIONS INVOLVED 1

STATEMENT OF THE CASE 2

REASONS FOR GRANTING THE WRIT 12

I. *Certiorari* Should Be Granted Because the Decision Below Conflicts Directly With Decisions of This Court. 13

II. *Certiorari* Should Be Granted Because the Decision Below Will Seriously Disrupt and Damage the Patent System. 24

III. *Certiorari* Should Be Granted Because the Decision Below Legislates New and Harmful Public Policy. 26

CONCLUSION 28

TABLE OF AUTHORITIES

Cases **Page**

Bayer AG v. Duphar Int'l Research B.V.,
738 F.2d 1237 (Fed. Cir. 1984) 22

Black & Decker, Inc. v. Hoover Serv. Ctr.,
886 F.2d 1285 (Fed. Cir. 1989) 16

Exhibit Supply Co. v. Ace Patents Corp.,
315 U.S. 126 (1942) 25

Goodyear Dental Vulcanite Co. v. Davis,
102 U.S. 222 (1880) 22, 23

Graver Tank & Mfg. Co. v. Linde Air Prods. Co.,
339 U.S. 605 (1950) 19, 20, 27

Gray v. James,
10 F. Cas. 1015 (C.C.D. Pa. 1817) 19

Hughes Aircraft Co. v. United States,
140 F.3d 1470 (Fed. Cir. 1998) 7

Hughes Aircraft Co. v. United States,
717 F.2d 1351 (Fed. Cir. 1983) 7

Hurlbut v. Schillinger,
130 U.S. 456 (1889) 23

Odiorne v. Winkley,
18 F. Cas. 581 (C.C.D. Mass. 1814) 19

Royal Typewriter Co. v. Remington Rand,
168 F.2d 691 (2d Cir. 1948) 20

Shepard v. Carrigan,
116 U.S. 593 (1886) 23

Union Paper-Bag Machine Co. v. Murphy,
97 U.S. 120 (1878) 21

Warner-Jenkinson Co. v. Hilton Davis Chem. Co.,
520 U.S. 17 (1997) ..... *passim*

Winans v. Denmead,
56 U.S. (15 How.) 330 (1853) 19

Statutes and Constitutional Provisions

28 U.S.C. § 1254(1) 1

35 U.S.C. § 112 ..... 3, 16

35 U.S.C. § 271(a) 1

U.S. CONST. ART. I, § 8, cl. 8 ..... 1, 24

Miscellaneous

Brief for United States as *Amicus Curiae*,
1996 WL 172221 (U.S. Apr. 11, 1996) 15

FEDERALIST NO. 43 (James Madison) 24

Festo Corporation hereby petitions for a writ of *certiorari* to review the *en banc* judgment of the United States Court of Appeals for the Federal Circuit in this case.

OPINIONS BELOW

The Federal Circuit's *en banc* decision entering judgment on rehearing in favor of respondents (collectively referred to as "SMC") (App. 1a-155a) is reported at 234 F.3d 558. Prior opinions include the Federal Circuit's opinion affirming the district court's judgment of infringement in favor of petitioner (App. 190a-207a), reported at 72 F.3d 857. This Court's order granting *certiorari*, vacating and remanding for further consideration is reported at 520 U.S. 1111. The Federal Circuit's decision after remand from this Court reinstating the judgment in favor of petitioner (App. 156a-189a) is reported at 172 F.3d 1361.

JURISDICTION

The Federal Circuit *en banc* entered its opinion and order on November 29, 2000. The Chief Justice granted an extension of time for filing this petition to and including March 29, 2001. The Chief Justice granted a second extension of time for filing this petition to and including April 9, 2001. This Court has jurisdiction under 28 U.S.C. § 1254(1).

CONSTITUTIONAL AND STATUTORY PROVISIONS INVOLVED

Article 1, section 8, clause 8 of the Constitution provides:

"Congress shall have the power . . . to promote the Progress of Science and useful Arts, by securing for limited Times to Authors and Inventors the exclusive Right to their Respective Writings and Discoveries."

35 U.S.C. § 271(a) provides:

"Except as otherwise provided in this title, whoever without authority makes, uses, offers to sell, or sells any patented invention, within the United States or imports into the United

States any patented invention during the term of the patent therefor, infringes the patent."

STATEMENT OF THE CASE

This case presents a fundamental change in patent law accomplished by the virtual abolition of the century-old "doctrine of equivalents." Under this well-established doctrine, "a product or process that does not literally infringe upon the express terms of a patent claim may nonetheless be found to infringe if there is 'equivalence' between the elements of the accused product or process and the claimed elements of the patented invention." *Warner-Jenkinson Co. v. Hilton Davis Chem. Co.*, 520 U.S. 17, 21 (1997). The principle has been consistently applied by this Court, in numerous cases, since the doctrine was first embraced in 1853. It is a frequently recurring issue in patent law and practice.

Petitioner Festo Corporation owns two U.S. Patents—the Stoll and Carroll patents. The district court found both to have been infringed by respondents under the doctrine of equivalents. On two occasions, a unanimous panel of the Federal Circuit affirmed. (App. 156a-189a; 190a-207a). After rehearing *en banc*, however, the Federal Circuit held that the doctrine of equivalents did not apply. In so doing, the Federal Circuit severely restricted the doctrine by holding (i) that prosecution history estoppel applies if an amendment was made to a patent claim for *any* reason relating to the statutory requirements for a patent, including matters of form that are not in any way related to overcoming or avoiding prior art; and (ii) that prosecution history estoppel creates an "absolute bar" to reliance upon *any* range of equivalents to prevent near-identical copying of the patented product.

Since most patent claims are amended in the application process, including the vast majority of the 1.2 million patents now in force, the *en banc* majority has given a free hand to copyists and severely undercut the protection provided by patents already issued and those to be issued in the future.

1. *Prosecution History of Festo's Patents.* The Stoll and Carroll patents are directed to linear actuators known as "magnetic rodless cylinders." Briefly stated, these devices are employed in a wide range of industrial applications to transport articles from one point to another. The cylinders include three basic components: a piston, a cylinder, and a sleeve. The piston sits inside the cylinder and is driven by pressurized fluid. The sleeve sits outside the cylinder and is magnetically coupled to the piston. Accordingly, movement of the piston back and forth within the cylinder tube causes the sleeve likewise to move back and forth along the cylinder without the need for any mechanical linkage between the piston and sleeve. This allows the device to move articles or machinery as desired. (App. 33a).

The U.S. Patent and Trademark Office ("PTO") initially rejected the pending claims in the Stoll patent application under 35 U.S.C. § 112 ¶ 1, which requires that the patent contain "a written description of the invention, and of the manner and process of making and using it, in such full, clear, concise, and exact terms as to enable any person skilled in the art to which it pertains, or with which it is most nearly connected, to make and use the same . . . ." The patent examiner concluded that the "exact method of operation [was] unclear" because he was unsure whether the device operated as "a true motor or magnetic clutch." (App. 40a). The examiner also objected to the claims under ¶ 2 of 35 U.S.C. § 112 because they were "improperly multiply dependent." (*Id.*). Dr. Stoll submitted new claims in order to *clarify* the nature of the device. (App. 40a-41a, 185a).[1] The claims were never rejected in view of prior art.

---

[1] Specifically, Dr. Stoll included within his broadest claim (independent claim 1) two limitations relevant here: (i) that there be two sealing rings disposed on the piston and (ii) that the outer sleeve of the device be made from magnetizable material. Both limitations had originally appeared in dependent claims when the application was first filed. (App. 40a, 185a).

The relevant amendments to the Carroll patent occurred after Festo voluntarily submitted that patent for re-examination in view of a German prior art reference that had not been considered during the original prosecution. During that proceeding, Carroll amended the claim without prompting from the examiner.[2]

The SMC devices that were found to infringe the Stoll and Carroll patents under the doctrine of equivalents are identical to the claimed inventions save in two insubstantial respects.[3]

2. *The Proceedings Below.* Festo sued SMC for infringing the Stoll and Carroll patents. The United States District Court for the District of Massachusetts granted summary judgment in favor of Festo, concluding that SMC's rodless cylinders infringed the Carroll patent under the doctrine of equivalents. Thereafter, a jury found that SMC infringed the Stoll patent under the doctrine of equivalents. (App. 157a).

On SMC's appeal, a Federal Circuit panel affirmed in full. (App. 190a-207a). After denial of rehearing, SMC petitioned for *certiorari*. This Court granted *certiorari*, vacated the judgment and remanded the case for further consideration in light of its then-recent decision in *Warner-Jenkinson*, in which the Court unanimously reaffirmed the vitality of the doctrine of equivalents.

This Court in *Warner-Jenkinson* "clarif[ied] the proper scope of the doctrine" in several respects, 520 U.S. at 21, including

---

[2] The claim was amended to include, among other things, two sealing rings, but Festo argued that what distinguished the amended claims was that the prior art did not "teach or render obvious the claimed combination which includes the plurality of magnets, end members, and cushion members in the claimed relationship." (App. 173a).

[3] *First*, rather than having a one-way sealing ring on each end of the piston, the SMC devices have a single two-way sealing ring located at one end of the piston. *Second*, the sleeve of the SMC device is made of an aluminum alloy, which is not generally considered to be a magnetizable material. (App. 38a-39a).

the role of "prosecution history estoppel." Prosecution history estoppel, this Court concluded, may limit the doctrine of equivalents in circumstances where the patent claim was amended during the application process, *depending on the reasons for the amendment and the purpose for which it was added. Id.* at 30-34. The *Warner-Jenkinson* Court rejected the argument that "any surrender of subject matter during patent prosecution, regardless of the reason for such surrender, precludes recapturing any part of that subject matter, even if it is equivalent to the matter expressly claimed." *Id.* at 30. The Court observed that "petitioner reaches too far in arguing that the reason for an amendment during patent prosecution is irrelevant to any subsequent estoppel." *Id.*

Commenting on more than one hundred years of precedent, the *Warner-Jenkinson* Court noted: "It is telling that in each case this Court probed the reasoning behind the Patent Office's insistence upon a change in the claims. In each instance, a change was demanded because the claim as otherwise written was viewed as not describing a patentable invention at all—typically because what it described was encompassed within the prior art." *Id.* at 31. Thus, rather than adopt a "rigid rule invoking an estoppel regardless of the reasons for a change," *id.* at 32, the Court held instead that "[w]here the reason for the change was not related to avoiding the prior art, the change may introduce a new element, but it does not necessarily preclude infringement by equivalents of that element." *Id.* at 33. To decide whether an estoppel applies, a court should "explore . . . the reason (right or wrong) for the objection and the manner in which the amendment addressed and avoided the objection." *Id.* at 33 n.7. Where the reason for an amendment is not established, however, the Court ruled that it would "presume that the patent applicant had a substantial reason related to patentability for including the limiting element added by amendment. In those circumstances, prosecution history estoppel would bar the application of the doctrine of equivalents as to that element." *Id.* at 33. The Court then

remanded for further consideration of whether the doctrine of equivalents would support the infringement claim. *Id.* at 34.[4]

In the case at hand, on remand in *Warner-Jenkinson*'s wake, another Federal Circuit panel reinstated the prior findings that SMC's devices contained no differences of substance from the patented inventions. The panel held, with respect to the Carroll patent, that because the amendment was made voluntarily and not in response to any objection by the patent examiner, prosecution history estoppel did not limit application of the doctrine of equivalents. (App. 174a-175a). With respect to the Stoll patent, the panel held that one amendment was likewise voluntary, not made to avoid the prior art, and thus prosecution history estoppel did not apply. (App. 188a). Because the other amendment in this patent presented an "unresolved issue," however, the Federal Circuit panel remanded to the district court to determine, *ab initio*, whether the *Warner-Jenkinson* presumption should apply and if so, whether it could be rebutted. (*Id.*).

3. *The En Banc Decision:* The Federal Circuit reheard the case *en banc* and, in a sharply divided 8 to 4 decision, reversed the finding of infringement under the doctrine of equivalents as to both patents. (App. 1a-156a). The court began by setting forth five "*En Banc* Questions" that it had requested the parties and *amici* to brief. (App. 2a-3a). The court then summarized its answers to those questions. Relevant to this petition are the court's answers to its Questions 1, 2 and 3.

On Question 1—whether "a substantial reason related to patentability" as used in *Warner-Jenkinson* is limited only to reasons relating to a prior art rejection—the *en banc* court held

---

[4] Justice Ginsburg, joined by Justice Kennedy, wrote separately to "add a cautionary note on the rebuttable presumption the Court announces regarding prosecution history estoppel." *Id.* at 41. Justice Ginsburg noted that "if applied woodenly," the new presumption might "unfairly discount the expectations of a patentee who had no notice at the time of patent prosecution that such a presumption would apply." *Id.*

that an amendment relating to *any* statutory requirement for patentability, even if unrelated to prior art, will trigger prosecution history estoppel. (App. 3a, 8a-11a). On Question 2—whether a "voluntary" claim amendment not made in response to any objection by the patent examiner can trigger an estoppel—the court answered yes. (App. 3a-4a, 11a-13a). On Question 3—whether if a claim amendment creates an estoppel, there is any range of equivalents available to the patent holder for the amended claim element—the court answered no. The *en banc* majority concluded, instead, that the estoppel acts as a "complete bar" to application of the doctrine of equivalents to that element. (App. 4a, 13a-30a).

The court was most badly fractured on the last question. The eight-member majority began with the premise that this Court had not ruled on this precise issue. (App. 13a-19a). The majority acknowledged that the regional courts had been split on this question prior to the Federal Circuit's formation (App. 19a-20a) and also discerned a split in the Federal Circuit's own lengthy line of pertinent cases. Most cases, the majority noted, had applied a "flexible bar" approach to prosecution history estoppel—in which the range of permissible equivalents required "a determination as to the exact 'subject matter the patentee actually surrendered,'" (App. 23a, *quoting Hughes Aircraft Co. v. United States*, 140 F.3d 1470, 1476-77 (Fed. Cir. 1998) ("*Hughes II*")),[5] whereas other cases "followed a strict approach, according to which a court refused to speculate whether a narrower amendment would have been allowed" and thus refused to allow any range of equivalents for amended elements. (App. 22a).

---

[5] *Hughes II* had reaffirmed the holding in *Hughes Aircraft Co. v. United States*, 717 F.2d 1351 (Fed. Cir. 1983) ("*Hughes I*"), which the majority identified as the progenitor of the Federal Circuit's "flexible bar" line of cases. (App. 19a). There, in an opinion authored by then-Chief Judge Howard Markey, *Hughes I* held that prosecution history estoppel "may have a limiting effect" on the doctrine of equivalents "within a spectrum ranging from great to small to zero." *Hughes I* at 1363.

The *en banc* majority "revisit[ed]" the issue and decided that when prosecution history estoppel applies, it operates as a "complete bar" to the doctrine of equivalents. (App 24a). The majority criticized the "flexible bar" approach as "unworkable" because of a perceived "difficulty . . . in predicting with any degree of certainty the scope of surrender that will be found when prosecution history estoppel applies." (App. 25a). The majority said its holding "promot[ed] certainty in patent law." (App. 26a). The *en banc* majority read some of the cases cited by this Court in *Warner-Jenkinson* as not supporting a flexible rule, but rather as "suggesting a strict measurement of the scope of equivalents" (App. 26a-27a), and cited the rebuttable presumption erected in *Warner-Jenkinson* as further justification for a "complete bar." (App. 27a). Public policy also justified its result, the majority said, because "under the complete bar approach, technological advances that would have lain in the unknown, undefined zone around the literal terms of a narrowed claim under the flexible bar approach will not go wasted and undeveloped due to fear of litigation." (App. 30a).

Having resolved each of the "*En Banc* Questions" against Festo, the majority reversed the district court's finding of infringement solely on the basis of estoppel. (*Id.*). Left intact, as the law of this case, were the findings that SMC's devices embodied no substantial differences from Festo's patented inventions.

Judge Plager, a member of the majority, wrote separately to note that the new approach represents "a second-best solution to an unsatisfactory situation." (App. 56a). He explained that the majority "attempts to limit some of the indeterminacy of the doctrine [of equivalents] with a set of bright-line rules, trading off areas of uncertainty for a degree of rigidity." (App. 58a). He concluded that the effort to create certainty "contains the potential for unintended consequences, consequences that may do nothing but exacerbate the problem." (*Id.*).

The *en banc* decision provoked several vigorous dissents. Reviewing more than a century of precedent, Judge Michel,

concurring and dissenting, joined by Judge Rader, maintained that the majority's complete bar "contradicts Supreme Court precedent and policy." (App. 69a). He addressed the enormous impact that the majority's new rule would have on the patent system: "[B]ecause most patents contain claims that were amended during prosecution, the majority's holding effectively strips most patentees of their rights to assert infringement under the doctrine of equivalents, despite the Supreme Court's unanimous adherence to the doctrine in *Warner-Jenkinson*." (*Id.*). Judge Michel said the majority provided a road-map for patent pirates:

> Would-be copyists, of course, will exploit the majority's bar. Unwittingly, the majority has severely limited the protection previously available to patentees. Indeed, it may nullify the doctrine of equivalents. Under the majority's approach, anyone who wants to steal a patentee's technology need only review the prosecution history to identify patentability-related amendments, and then make a trivial modification to that part of its product corresponding to an amended claim limitation. * * * [M]ost patentees will lose the protection against copying that the Supreme Court unanimously reaffirmed in *Warner-Jenkinson*.

(App. 74a). Judge Michel concluded that the ruling "will upset basic assumptions regarding the effective scope of patents, and will unfairly disrupt commercial relations based on these assumptions." (App. 111a).

Judge Linn, concurring and dissenting, joined by Judge Rader, stated that the "majority's new rigid bright line rule, eliminating all flexibility in the scope afforded certain claim limitations amended for a statutory purpose just because they were amended for a statutory purpose, goes too far." (App. 113a). Thus,

> the new bright line rule, as simple as it is hoped to be in application, wrongfully sets in place a regime that increases

> the cost and complexity of patent prosecution to the detriment of individual inventors, start-up companies, and others unable to bear these increased costs. The new regime also places greater emphasis on literary skill than on an inventor's ingenuity; gives unscrupulous copyists a free ride on the coattails of legitimate inventors; and changes the rules under which prosecution strategies were formulated for thousands of extant patents no longer subject to correction."

(*Id.*).[6]

Judge Linn pointed out that the majority's new rule "unfairly tips the balance away from patentees and toward competitors by constraining the legitimate rights of patentees to their inventions, even where competitors can reasonably determine the reasons for any amendments and the scope of any subject matter surrendered. In my view, this is an ill-advised major policy shift that is neither compelled nor justified at this time." (App. 114a). He emphasized the increased cost and delay in the patent procurement process wrought by the majority's new regime; patent applicants will now be reluctant, he warned, to speed the patent prosecution process by agreeing to minor claim amendments suggested by the examiner for fear of creating an estoppel. This will hit hardest individual inventors and start-up companies who can least afford increased expense and delay. (App. 120a-121a).

Judge Rader wrote separately to warn that "[w]ithout a doctrine of equivalents, any claim drafted in current technological terms could be easily circumvented after the advent of an advance in technology." (App. 111a). Because the majority barred all application of the doctrine of equivalents

---

[6] With respect to the latter issue, Judge Linn noted this Court's concern in *Warner-Jenkinson* that "[t]o change so substantially the rules of the game now could very well subvert the various balances the PTO sought to strike when issuing the numerous patents which have not yet expired and which would be affected by our decision." (App. 113a, *quoting Warner-Jenkinson*, 520 U.S. at 32 n. 6).

for amended claims, "[a]ll patent protection for amended claims is lost when it comes to after-arising technology," even though this Court in *Warner-Jenkinson* had expressly "acknowledged the doctrine's role in accommodating after-arising technology." (App. 112a).

Finally, Judge Newman, also concurring and dissenting, demonstrated that the majority opinion departs from *Warner-Jenkinson* in three ways:

> First, the majority holds that all equivalency is barred as to any claim element that is narrowed or added for reasons relating to patentability; access to the doctrine of equivalents is barred whether or not the [Supreme] Court's new rebuttable presumption arises and whether or not it is rebutted. Second, the majority denies consideration to any rebuttal evidence that is not already in the prosecution record, thereby converting the [*Warner-Jenkinson*] rebuttable presumption into an irrebuttable fiat. Third, the majority's inappropriately broad definition of "reasons related to patentability" further limits a patentee's access to equivalency, and exacerbates the conflict with the holdings of *Warner-Jenkinson*. The result is to negate infringement by equivalents, as a matter of law, thereby providing a blueprint for ready imitation of patented products.

(App. 132a).

Judge Newman observed that "[t]his spontaneous judicial action represents a venture into industrial policy whose consequences have been inadequately considered." (App. 133a). Addressing the majority's view that eliminating patent protection under the doctrine of equivalents will increase incentives for the public to "improve on patented technology and design around it," Judge Newman replied: "[T]he assumption that placing new technology in the public domain is always the optimum path to industrial growth is not supported by experience. Empirical studies have added rigor

to the common sense knowledge that reduced profit opportunity affects the supply of capital to launch a new technology, and often the creation of the technology itself." (App. 153a).

REASONS FOR GRANTING THE WRIT

Petitioner seeks review because the judgment below (1) is in direct conflict with this Court's *Warner-Jenkinson* decision; (2) radically transforms established patent law to favor copyists over patentees; and (3) severely undercuts the policy behind the patent law.

Since the Federal Circuit has exclusive jurisdiction of patent appeals from district courts, there can be no circuit conflict. Nor is it possible for the issues presented here to be ventilated in other circuits. The several opinions below, however, have thoroughly explored the issues and the competing policies that underlie them.

Abandoning the case-by-case approach reaffirmed unanimously in *Warner-Jenkinson*, the majority legislated a new principle that is at once inconsistent with a century-old body of case law (as demonstrated by Judge Michel, joined by Judge Rader) and at war with bedrock policies encouraging innovation and discouraging copying (as emphasized by Judge Linn and Judge Newman). The majority ignores the continuing problem of technological developments being seized by imitators to rob the inventor of the fruits of creativity (as noted by Judges Rader and Newman). The decision defies basic economic principles (as demonstrated by Judge Newman). In the process, the Federal Circuit rides roughshod over fundamental issues of fairness, emphasized by this Court unanimously in *Warner-Jenkinson*, 520 U.S. at 32 n.6, and seconded in her concurring opinion by Justice Ginsburg, joined by Justice Kennedy. *Id.* at 41-42.

Festo's destabilizing effects on 1.2 million existing patents, with the significant diminution in value of heretofore settled property rights, will be acute. Further percolation, if any, can

only come at the expense of these property rights, which are limited in time.

The *en banc* majority's quest for a dubious certainty is purchased at the price of disabling the patent system Congress intended. If it had preferred the balance between certainty and creativity that the Federal Circuit has legislated, Congress could have enacted laws expanding prosecution history estoppel and eliminating the doctrine of equivalents at any time in the past one hundred and more years. It has chosen not to do so.

The conflict between this case and this Court's precedent, plus the irreparable damage to patent law and incentives for innovation threatened by the Federal Circuit's decision, make review by this Court now not only appropriate but essential.

I. *Certiorari* Should Be Granted Because the Decision Below Conflicts Directly With Decisions of This Court.

The conflict between the *en banc* decision below and this Court's considerable body of applicable precedent embraced and reaffirmed by *Warner-Jenkinson* is manifest. There are six points of flat disagreement between this case and *Warner-Jenkinson*:

(1) This Court held that, depending upon the circumstances, amendments to patent claims did not necessarily trigger prosecution estoppel, but the Federal Circuit held that any narrowing amendment or addition to a filed claim that related to patentability created estoppel regardless of the reasons for the change;

(2) This Court held that where the reason for an amendment is unclear, a rebuttable presumption arises that the reason would not avoid prosecution history estoppel, but the Federal Circuit, by holding that any addition or narrowing amendment created an estoppel regardless of the reason, ruled out the possibility of any rebuttal;

(3) The Federal Circuit ruled that any reason for an amendment must appear on the record of the patent's prosecution history and that evidence outside of the prosecution history record may not be considered, but there is no role for a rebuttable presumption if the reason is already on the record of the history before the court and no other evidence is allowed by which such a presumption could be rebutted;

(4) This Court stressed that the application of its rules should be guided by fairness, but the Federal Circuit's inflexible rules of prosecution history estoppel and the doctrine of equivalents leave no room for any such value as fairness; and

(5) This Court held that even where an estoppel did arise, the patentee might still have the opportunity to invoke the doctrine of equivalents, but the Federal Circuit held that its automatic estoppel completely barred application of that doctrine; and

(6) Finally, this Court and the Federal Circuit disagree fundamentally about the law announced in cases prior to this one.

These conflicts will be taken up in order.

1. *Warner-Jenkinson* rejected a "rigid rule" for application of prosecution history estoppel. The petitioner in *Warner-Jenkinson* advocated a "rigid rule" under which any amendment, regardless of the reason for it, would result in a prosecution history estoppel barring any application of the doctrine of equivalents. To do otherwise, the argument went, "would undermine the public's right to clear notice of the scope of the patent as embodied in the patent file." 520 U.S. at 30.

This Court was unpersuaded. *Warner-Jenkinson* expressly rejected such a *per se* rule as going "too far," *id.*, even though it would have provided a "bright line." *Id.* at 32 n.6. This Court in *Warner-Jenkinson*, taking counsel from the United States and the Solicitor of the PTO, decided that only a limited set of

reasons for an amendment should trigger an estoppel.[7] The reason for an amendment was to be controlling.

Petitioner's *per se* rule, the Court said, would be contrary to the long line of cases that had "probed the reasoning behind the Patent Office's insistence upon a change in claims." 520 U.S. at 31. Estoppel had been applied "only where claims have been amended for a limited set of reasons." *Id.* at 32. After carefully reviewing these cases, the Court concluded that "[w]here the reason for the change was not related to avoiding the prior art, the change may introduce a new element, but it does not necessarily preclude infringement by equivalents of that element." *Id.* at 33. Where that reason was unclear, the Court balanced the competing interests of the patent holder and his competitors by erecting a rebuttable presumption:

> Mindful that claims do indeed serve both a definitional and a notice function, we think the better rule is to place the burden on the patent holder to establish the reason for an amendment required during patent prosecution. The court then would decide whether that reason is sufficient to overcome prosecution history estoppel as a bar to application of the doctrine of equivalents to the element added by that amendment. Where no explanation is established, however, the court should presume that the patent applicant had a substantial reason related to patentability for including the limiting element added by amendment. In those circumstances, prosecution history estoppel would bar the application of the doctrine of equivalents as to that element.

Id. Despite the clarity of this Court's reasoning and conclusion, the Federal Circuit majority adopted the same rigid, *per se* rule rejected in *Warner-Jenkinson*.

---

[7] *See* Brief for United States as *Amicus Curiae*, 1996 WL 172221, at *22-23 (U.S. Apr. 11, 1996), filed in *Warner-Jenkinson*.

The practical consequences of the Federal Circuit's substitution of its rule for the law enunciated by this Court are enormous. The vast majority of patents are amended in some way during prosecution in the PTO. (*See* App. 69a, Michel, J., dissenting (observing that "most patents contain claims that were amended during prosecution")). Virtually all such amendments are made to comply with some statutory requirement for patentability.[8] *Accord Black & Decker, Inc. v. Hoover Serv. Ctr.*, 886 F.2d 1285, 1295 (Fed. Cir. 1989) (Markey, C.J.) (Commenting on a district court's view that the fact of an amendment precludes application of equivalents: "Considering that virtually every patent application is amended, acceptance of the court's statement . . . would read the doctrine of equivalents out of the law.").

The Federal Circuit's decision cannot stand in the face of this Court's ruling on amendments and prosecution history estoppel.

2. The fact that this Court provided for rebuttal of the presumption of estoppel arising where the reason for an amendment is unclear demonstrates once more that the decision below conflicts with *Warner-Jenkinson*. Under the Federal Circuit's rule, the fact of an amendment automatically results in prosecution history estoppel so that the promised opportunity to rebut disappears.

---

[8] As Judge Linn observed, a patent claim is "a linguistic description of a mental concept. Due to the inherent limitations of language, the fit between the description and the concept is almost always inexact. In addition . . . the language itself may not be adequately developed at the early stages when patent applications typically are filed, particularly in rapidly evolving research fields." (App 116a, citation omitted). As a result, "it is quite difficult for claim drafters to draft initial claims that adequately and accurately cover the 'invention' on the day the patent application is filed. Consequently, claims are commonly amended during prosecution to more particularly point out and distinctly claim that which is regarded to be the invention [in compliance with 35 U.S.C. § 112 ¶ 2]." (App. 116a-117a).

Both Judge Newman and Judge Linn pointed out that, in light of the majority's great expansion of the scope of prosecution history estoppel (and the absolute bar to equivalents that results), the majority's newly-minted rule would bar the very inquiry for which this Court had remanded in *Warner-Jenkinson*, and which the Court presumably had thought the Federal Circuit would address after the vacatur and remand in this very case. (App. 122a-123a, Linn, J. dissenting, 133a-134a, Newman, J. dissenting).

The *Festo* bar applies without inquiry into the facts to determine whether it is fair and accurate to say that the patent applicant voluntarily surrendered, abandoned, or disclaimed coverage of equivalents by his actions in the PTO. The net effect, as Judge Newman observed, is that "access to the doctrine of equivalents is barred whether or not the [*Warner-Jenkinson*] rebuttable presumption arises and whether or not it is rebutted." (App. 132a).[9]

The Federal Circuit majority has rescinded the opportunity to rebut that this Court offered.

3. Judge Newman pointed out a further conflict with *Warner-Jenkinson*: The *en banc* majority held that "a patent holder seeking to establish the reason for an amendment must base his arguments solely upon the public record of the patent's prosecution, i.e., the patent's prosecution history" (App 47a). But the presumption arises only where the prosecution record is *silent* as to the reason for the amendment. *Warner-Jenkinson*, 520 U.S. at 33 ("the record seems not to reveal the reason for including [the 6.0 pH limitation.]"). Thus, Judge

---

[9] Judge Linn similarly observed: "If the doctrine of equivalents is completely barred when no reason for an amendment can be discerned from the prosecution history, and it is likewise completely barred when a reason is stated, what is the point of exploring the 'reason (right or wrong) for the [examiner's rejection of the claim prior to its being amended] and the manner in which the amendment addressed and avoided that [rejection?]'" (App. 122a, *quoting Warner-Jenkinson*, 520 U.S. at 33 n.7).

Newman observed: "The rebuttable presumption thereby becomes irrebuttable, because the prosecution record is necessarily silent in order for the presumption to arise at all. This impossibility of rebuttal was surely not contemplated by the [Supreme] Court . . . ." (App. 136a).

Judge Newman continued: "That the majority's ruling makes rebuttal impossible is illustrated by the patents in suit. Since Festo's explanation of its amendment to the Carroll claims is now limited to the prosecution record, the presumption can not be rebutted because the prosecution record is silent as to the reason for the amendment. Indeed, since there is no requirement that a patent applicant explain amendments made before an examiner's rejection on the merits—the situation for both the Carroll and Stoll patents—evidence explaining such amendments is not normally present in the prosecution record." (App. 137a).

4. Concern with fairness in the application of the doctrine suffused the Court's opinion in *Warner-Jenkinson*: "To change so substantially the rules of the game now could very well subvert the various balances the PTO sought to strike when issuing the numerous patents which have not yet expired and which would be affected by our decision." 520 U.S. at 32 n.6. Furthermore, in her concurrence, Justice Ginsburg anticipated difficulty—not practical impossibility—in rebutting the presumption: "[Prior to our decision today] a patentee would have had little incentive to insist that the reasons for all modifications be memorialized in the file wrapper as they were made. Years after the fact, the patentee may find it difficult to establish an evidentiary basis that would overcome the new presumption. The Court's opinion is sensitive to this problem . . . ." *Id.* at 41.

Justice Ginsburg stressed the concern that changes in the law which affect now-closed file histories be applied fairly. *Id.* The decision below, which *retroactively* applies to all in-force

patents, sweeps aside the concern for fairness articulated by a unanimous Court just four years ago.

In stark contrast, fairness considerations are nowhere to be found in the *en banc* majority's steely approach. The two patents asserted by Festo were prosecuted more than twenty years ago under a completely different set of rules. Festo never had the opportunity or occasion to present evidence on the reason for the amendments. It has, therefore, no way whatever to avoid the Federal Circuit's new estoppel rule and hence no means to defend its inventions through the doctrine of equivalents. That is flatly wrong under *Warner-Jenkinson*.

5. The doctrine of equivalents has been central to patent protection throughout most of our history.[10] The doctrine was given its modern contours in *Graver Tank & Manufacturing Co. v. Linde Air Products Co.*, 339 U.S. 605 (1950). There, this Court observed:

> [The] courts have also recognized that to permit imitation of a patented invention which does not copy every literal detail would be to convert the protection of the patent grant into a hollow and useless thing. Such a limitation would leave room for—indeed encourage—the unscrupulous copyist to make unimportant and insubstantial changes and substitutions in the patent

---

[10] Some of the earliest reported patent cases reflect application of the doctrine. *See Odiorne v. Winkley*, 18 F. Cas. 581, 582 (C.C.D. Mass. 1814) ("The first question for consideration is, whether the machines used by the defendant are substantially, in their principles and mode of operation, like plaintiff's machines . . . . Mere colorable alterations of a machine are not sufficient to protect the defendant."); *Gray v. James*, 10 F. Cas. 1015, 1016 (C.C.D. Pa. 1817) ("But we think it may safely be laid down as a general rule, that where machines are substantially the same, and operate in the same manner, to produce the same result, they must be in principle the same."). Prior to the Civil War, this Court adopted these principles. *See Winans v. Denmead*, 56 U.S. (15 How.) 330, 343 (1853) ("The exclusive right to the thing patented is not secured, if the public are at liberty to make substantial copies of it, varying its form or proportions.").

> which, though adding nothing, would be enough to take the copied matter outside the claim, and hence outside the reach of law.

Id. at 607. The doctrine of equivalents evolved in response to this concern. For decades, the doctrine functioned "to temper unsparing logic and prevent an infringer from stealing the benefit of the invention." *Id.* at 608 (quoting Judge Learned Hand in *Royal Typewriter Co. v. Remington Rand*, 168 F.2d 691, 692 (2d Cir. 1948)).

Warner-Jenkinson resolved any doubts about the vitality of the doctrine that may have lingered by once more reaffirming the doctrine of equivalents. The Court was keenly aware of the need for balance between protecting the incentive to innovate and concerns over uncertainty as to the scope of patent claims. The *en banc* majority below—by jettisoning the rebuttable presumption and erecting a "complete bar"—fashioned a blunderbuss solution for a problem that this Court intended to be addressed in a quite different, more nuanced way. The *Warner-Jenkinson* Court was mindful of the concern that the doctrine of equivalents, if applied too broadly, "conflicts with the definitional and public-notice functions of the statutory claiming requirement." *Id.* at 29. *Warner-Jenkinson* addressed that concern. Justice Thomas's opinion for the unanimous Court achieved balance between the patentee and his competitors by adopting what has come to be known as the "all-elements rule":

> Each element contained in a patent claim is deemed material to defining the scope of the patented invention, and thus the doctrine of equivalents must be applied to individual elements of the claim, not to the invention as a whole. It is important to ensure that the application of the doctrine, even as to an individual element, is not allowed such broad play as to effectively eliminate that element in its entirety. So long as the doctrine of equivalents does not encroach beyond the limits just described, . . . we are confident that the doctrine will not

> vitiate the central functions of the patent claims themselves.

Id. at 29-30.

A court is thus obliged by *Warner-Jenkinson* to undertake this "essential inquiry": "Does the accused product or process contain elements identical or equivalent to each claimed element of the patented invention?" *Id.* at 40. If so, the accused product (such as SMC's rodless cylinder here) is considered the same as the claimed invention, and is thus infringing: "[T]he substantial equivalent of a thing, in the sense of the patent law, is the same as the thing itself." *Id.* at 35, *quoting Union Paper-Bag Machine Co. v. Murphy*, 97 U.S. 120, 125 (1878). Indeed, "the essential predicate of the doctrine of equivalents is the notion of identity between a patented invention and its equivalent." *Id.*

The question whether a product accused of infringement is an "equivalent" of the claimed invention is an issue of fact, 520 U.S. at 38-39, and this Court gave specific "guidance" to the Federal Circuit as to how to review those factual determinations. *Id.* at 39 n.8. But the Federal Circuit balked, threw up its hands, and instead "by-pass[ed] the all-elements rule altogether" (App. 73a, Michel, J., dissenting).

This is profoundly wrong in law, in logic, and in policy. That could not be better illustrated than by the facts of this case. Even though it has been established that SMC's device duplicates each element of the claims of the Stoll and Carroll patents—in most cases exactly but in two aspects through insubstantial differences—the Federal Circuit's new *per se* rule of estoppel has, in effect, obliterated Festo's patents, leaving petitioner helpless before copyists for no better reason than that twenty years ago the claims were amended. The effect upon Festo will be devastating; the effects upon the patent system no less so.

6. The majority below was aware of the question of its fidelity to this Court's jurisprudence, including the concern for

basic fairness. The *en banc* majority sought to avoid a conflict with this Court with a simple but utterly inadequate response: it asserted boldly that this Court had never addressed the issue of whether, when prosecution history estoppel is invoked, any scope of equivalents should be allowed to the patentee. (App. 14a). We show below that this is quite wrong. The majority did acknowledge, however, that during its 20-year history, "most" of the Federal Circuit's own cases had applied a "flexible rule" which allowed some range of equivalents to the patentee even in those instances where prosecution history estoppel did apply. (App. 19a-24a). The *en banc* majority felt compelled to change the law—and overrule its own decision in *Hughes I*—because, it said, the uncertainties inherent in the "flexible bar" rule made it "unworkable." (App 24a-25a).

The majority's analysis starts from the false premise that this Court has never addressed whether, if prosecution history estoppel exists, the patentee is still entitled to assert his patent against some range of equivalent structures. But *Warner-Jenkinson* itself began the discussion of prosecution history estoppel by citing the Federal Circuit's decision in *Bayer AG v. Duphar International Research B.V.*, 738 F.2d 1237 (Fed. Cir. 1984), as an example of the "well-established" rule of prosecution history estoppel. 520 U.S. at 30. *Bayer* quotes the very portion of *Hughes I*—overruled by the majority below—that rejects as "wooden" the notion that "virtually any amendment of the claims creates a 'file wrapper estoppel' effective to bar all resort to the doctrine of equivalents, and to confine [the] patentee 'strictly to the letter of the limited claims granted.'" *Bayer*, 738 F.2d at 1242-43 (quoting *Hughes I*, 717 F.2d at 1362). The *en banc* majority did not discuss this demonstrable error in its essential premise.

More broadly, as Judge Michel showed in dissent, this Court has long recognized the ability of the patent holder to enforce his patent, even with amended claims, against an infringer whose product contained only insubstantial changes from the

patented invention.[11] That ability exists as long as the particular aspect for which equivalency is claimed was not previously surrendered during patent prosecution. (App. 74a-85a).

The *en banc* majority dismissed Judge Michel's thorough analysis of the case law, however, because, in its view, that body of law lacked "explicit and carefully considered language regarding the range of equivalents available when a claim amendment gives rise to prosecution history estoppel." (App. 18a-19a). This is strained at best; the case law proves, at the very least, that *some* range of equivalents was often available even when an estoppel arose—which is what the Federal Circuit majority denied. A study of the cases shows unmistakably that Judge Michel's analysis is correct.

Indeed, this Court illustrated the intended application of its balanced approach in the way it treated the facts of *Warner-Jenkinson*. The Court carefully parsed the amendment to the claim for a dye purification process that had added limitations

---

[11] *Goodyear Dental Vulcanite Co. v. Davis*, 102 U.S. 222, 223-27 (1880), *expressly* allowed for the possibility that the patentee could assert infringement of amended claims by products that were *equivalent* to those recited in the patent. *Id.* at 227. In *Hurlbut v. Schillinger*, 130 U.S. 456 (1889), the Court entered judgment of infringement by an equivalent of the claimed invention despite a previous disclaimer of claimed subject matter.

Judge Michel cited six other cases from the late 1800s, some of which were relied upon by this Court in *Warner-Jenkinson*. These cases also reflect a flexible, rather than a *per se*, application of the concepts underlying prosecution history estoppel. (*See* App. 84a-89a). For example, in *Shepard v. Carrigan*, 116 U.S. 593, 598 (1886), in addressing an amended claim, the Court stated: "If it be a claim to a combination, and be restricted to specified elements, all must be regarded as material, leaving open only the question whether an omitted part is supplied by an equivalent device or instrumentality." Indeed, the statement from *Shepard* is echoed a century later in *Warner-Jenkinson*, 520 U.S. at 32 (noting that the 6.0 pH limitation, "by its mere inclusion, became a material *element* of the claim, [but] that did not necessarily preclude the application of the doctrine of equivalents as to that element." (emphasis in original)).

requiring the process to be conducted at a pH between 6.0 and 9.0. No dispute existed that the 9.0 pH limitation was necessary to avoid a similar prior art process that operated at a pH above 9.0. *Id.* at 32. The Court remanded for determination of whether equivalents should be barred for the 6.0 pH limitation, however, which "by its mere inclusion, became a material *element* of the claim [but] that did not necessarily preclude the application of the doctrine of equivalents as to that element." *Id.* (emphasis in original).

The *en banc* majority below strayed far beyond the boundaries of this Court's long-settled jurisprudence.

II. *Certiorari* Should Be Granted Because the Decision Below Will Seriously Disrupt and Damage the Patent System.

The Federal Circuit's decision abolishes most of the protection afforded by the United States patent laws. No copyist need now fear the doctrine of equivalents and only a fool would fail to make an insubstantial change to avoid the literal terms of a patent claim. Nothing is saved by that court's requirement that to raise prosecution history estoppel, an amendment to a patent claim must be "narrowing" and related to "patentability." Almost all amendments narrow the claim to secure the approval of the examiner and almost all relate to patentability as that court has now defined it. It is not too much to say that the decision below has dealt the patent system a crippling blow.

The Constitution gives Congress the power to "promote the Progress of Science and useful Arts, by securing for limited Times to Authors and Inventors the exclusive Right to their Respective Writings and Discoveries." U.S. CONST., Art. I, § 8, cl. 8. James Madison, in urging ratification, observed that "[t]he utility of this power will scarcely be questioned." FEDERALIST NO. 43. "The public good fully coincides in both cases with the claims of individuals." *Id.* The Patent Act of 1790, 1 Stat. 109, one of the earliest measures passed by the

First Congress, was signed into law by President Washington. As Abraham Lincoln put it: "The patent system added the fuel of interest to the fire of genius." The doctrine of equivalents has been integral to the patent system for most of its existence. *See* pp. 19-21, *supra*.

The Court's intent to respect the historic assumptions of the patent system was explicit: "To change so substantially the rules of the game now could very well subvert the various balances the PTO sought to strike when issuing the numerous patents which have not yet expired and which would be affected by our decision." *Warner-Jenkinson*, 520 U.S. at 32 n.6. Untethered from its historic roots in equitable notions of "surrender," "abandonment" and "disclaimer," *see, e.g., Exhibit Supply Co. v. Ace Patents Corp.*, 315 U.S. 126, 136-37 (1942), the new, expanded version of prosecution history estoppel renders utterly irrelevant the question of what subject matter, if any, was surrendered, and why.

The patent bar must now struggle with the implications of the Federal Circuit decision and how best to draft and prosecute patents in order to avoid estoppel and its new-found effects. For example, contrary to previous practice in which patent applicants negotiate with examiners to arrive at mutually acceptable sets of claims (*see* App. 58a, Plager, J., concurring), applicants now are obliged strenuously to fight rejections by patent examiners and to refuse to make concessions in the claims.[12] This will, in turn, increase the backlog of patent applications going through administrative appeals and up to the courts for final review, thereby increasing the expense and delay in obtaining patents. (*See* App. 109a, Michel, J., dissenting). Since the term of a patent begins to run with the filing of an application, the delays, which will be lengthy, substantially lessen the value of the patent and hence weaken the incentive to innovate intended by the Constitution.

---

[12] Judge Lourie, in his concurrence, advises a patent applicant to now "stand his ground and appeal." (App. 67a).

III. *Certiorari* Should Be Granted Because the Decision Below Legislates New and Harmful Public Policy.

The linchpin of the *en banc* majority's approach is that the flexible rule of estoppel is "unworkable" because it creates uncertainty in the minds of those who would compete with patentees. Increased certainty and predictability are desirable but not at the price of destroying most of the patent system. *Warner-Jenkinson* affirmed a rule that achieves the balance this Court deems proper; the Federal Circuit majority disagreed and created a rule striking a very different balance. The *en banc* majority believed that:

> [Under the complete bar approach], technological advances that would have lain in the unknown, undefined zone around the literal terms of a narrowed claim under the flexible bar approach will not go wasted and undeveloped due to fear of litigation. The public will be free to improve on the patented technology and design around it without being inhibited by the threat of a lawsuit because the changes could possibly fall within the scope of equivalents left after a claim element has been narrowed by amendment for a reason related to patentability. This certainty will stimulate investment in improvements and design-arounds because the risk of infringement will be easier to determine.

(App. 30a).

Judge Newman, in dissent, pointed out the dubiety of the majority's assumption that the public will have new incentives to innovate in areas where patent protection has been destroyed: "the assumption that placing new technology in the public domain is always the optimum path to industrial growth is not supported by experience. Empirical studies have added rigor to the common sense knowledge that reduced profit opportunity affects the supply of capital to launch a new technology, and often the creation of the technology itself." (App. 153a).[13] Judge Newman drew upon the burgeoning literature concerning the economics of innovation. Consistent with the constitutional purpose of the patent system to promote the progress of science and the useful arts, it is the patentee, not the public, who is given the property right to control the "technological advances" that lie in the "zone around the literal terms" of a patent claim, so long as the "zone" is confined to equivalents of the patented invention. The *en banc* majority made no response.

The Federal Circuit's decision will have a profound and negative impact on incentives for innovation. Unscrupulous copyists now have been given a free ride on the creative efforts of others. The protection of the patent grant has been converted into what *Graver Tank* described as a "hollow and useless thing," 339 U.S. at 607. As Judge Michel explained, p. 9, *supra*, a copyist may now simply follow the prosecution history road map, make a change, no matter how trivial or insubstantial, to one element, and reproduce the patented invention in every other detail with impunity. That is exactly what happened here. SMC produced a classic knock-off product, thereby appropriating for itself the years of research and development embodied in Festo's patents.

If the law lowers the benefits of innovation while the costs remain the same, there will be less innovation. The decision below deprives the innovator of patent protection and hence of almost all the benefits of his work and creativity. A trade-off is involved between the rewards to creativity and the costs of

---

[13] Judge Linn made a similar observation: "However, in my opinion, limiting the patentee to protection of only the literal language of an amended claim limitation is not likely to promote the progress of the useful arts. Rather, the majority's new bright line rule, by constraining limitations amended for a statutory purpose to their literal terms, is likely to encourage insubstantial changes to an established product, rather than investment in break-through technological advancements. Such a rule, therefore, promotes free riding and undercuts the return on a patentee's investment." (App. 125a).

patent-awarded exclusivity. This Court's cases, culminating in *Warner-Jenkinson*, have made the trade-off decision and achieved a balance between costs and benefits. Congress has acquiesced in that balance by leaving the doctrine of equivalents undisturbed for well over a century. No reason appears why the Federal Circuit should be permitted to make its own public policy by dictating a different cost-benefit decision—one that condemns almost all patent enforcement efforts to futility.

CONCLUSION

For the reasons set forth above, the petition should be granted.

Respectfully submitted,

ROBERT H. BORK
Counsel of Record
Suite 1000
1150 17th Street, N.W.
Washington, D.C. 20036
(202) 862-5851

CHARLES R. HOFFMANN
HOFFMANN & BARON
6900 Jericho Turnpike
Syosset, NY 11791
(516) 822-3550

Supreme Court, U.S.
FILED

001543 APR 9 2001

OFFICE OF THE CLERK

-No. 00-

IN THE

Supreme Court of the United States

OCTOBER TERM, 2000

FESTO CORPORATION,

Petitioner,

v.

SHOKETSU KINZOKU KOGYO KABUSHIKI CO., LTD., A/K/A SMC CORPORATION AND SMC PNEUMATICS, INC.,

Respondents.

Petition for Writ of Certiorari to the United States Court of Appeals for the Federal Circuit

APPENDIX TO PETITION FOR WRIT OF CERTIORARI

CHARLES R. HOFFMANN
HOFFMANN & BARON, LLP
6900 Jericho Turnpike
Syosset, New York 11791
(516) 822-3550

ROBERT H. BORK
Counsel of Record
Suite 1000
1150 17th Street, N.W.
Washington, D.C. 20036
(202) 862-5851

Counsel for Petitioner Festo Corporation

April 9, 2001

213 pp

APPENDIX
TABLE OF CONTENTS

Page

Opinion of the Court of Appeals
November 29, 2000 ..... 1a

Opinion of the Court of Appeals
April 19, 1999 ..... 156a

Opinion of the Court of Appeals
December 14, 1995 ..... 190a

Opinion of the District Court
October 27, 1994 ..... 208a

APPENDIX A

UNITED STATES COURT OF APPEALS
FOR THE FEDERAL CIRCUIT

95-1066

FESTO CORPORATION,

Plaintiff-Appellee,

v.

SHOKETSU KINZOKU KOGYO
KABUSHIKI CO., LTD., a/k/a SMC CORPORATION,
and SMC PNEUMATICS, INC.,

Defendants-Appellants.

On remand from the Supreme Court of the United States
United States Court of Appeals for the Federal Circuit
95-1066

DECIDED: November 29, 2000

Before: MAYER, Chief Judge, NEWMAN, MICHEL,
PLAGER, LOURIE, CLEVENGER, RADER,
SCHALL, BRYSON, GAJARSA,
LINN, and DYK, Circuit Judges.

Opinion by Judge Schall;
Concurring opinion filed by Circuit Judge Plager;.
Concurring opinion filed by Circuit Judge Lourie;
Opinion concurring-in-part and dissenting-in-part
with respect to Part III-C filed by Judge Michel;
Opinion concurring-in-part and dissenting-in-part
with respect to Part III-C filed by Judge Rader;

Opinion concurring-in-part and dissenting-in-part with respect to Part III-C filed by Judge Linn; Opinion concurring-in-part and dissenting-in-part with respect to PARTS III-A, III-B, III-C, and IV filed by Judge Newman.

OPINION

SCHALL, Circuit Judge.

This is an appeal from the judgment of the United States District Court for the District of Massachusetts that Shoketsu Kinzoku Kogyo Kabushiki Co., Ltd. (also known as SMC Corporation) and SMC Pneumatics, Inc. (collectively, "SMC") infringed U.S. Patent No. 4,354,125 (the "Stoll patent") and U.S. Patent No. B1 3,779,401 (the "Carroll patent"), both owned by Festo Corporation ("Festo"), under the doctrine of equivalents. We took the case en banc to resolve certain issues relating to the doctrine of equivalents that remained in the wake of the Supreme Court's decision in *Warner-Jenkinson Co. v. Hilton Davis Chemical Co.*, 520 U.S. 17 (1997). Specifically, we asked the parties to brief the following five questions for rehearing en banc:

> 1. For the purposes of determining whether an amendment to a claim creates prosecution history estoppel, is "a substantial reason related to patentability," *Warner-Jenkinson Co. v. Hilton Davis Chem. Co.*, 520 U.S. 17, 33, 117 S. Ct. 1040, 137 L. Ed. 2d 146 (1997), limited to those amendments made to overcome prior art under § 102 and § 103, or does "patentability" mean any reason affecting the issuance of a patent?
>
> 2. Under *Warner-Jenkinson*, should a "voluntary" claim amendment—one not required by the examiner or made in response to a rejection by an examiner for a stated reason—create prosecution history estoppel?
>
> 3. If a claim amendment creates prosecution history estoppel, under *Warner-Jenkinson* what range of equivalents, if any, is available under the doctrine of equivalents for the claim element so amended?

> 4. When "no explanation [for a claim amendment] is established," *Warner-Jenkinson*, 520 U.S. at 33, 117 S. Ct. 1040, thus invoking the presumption of prosecution history estoppel under *Warner-Jenkinson*, what range of equivalents, if any, is available under the doctrine of equivalents for the claim element so amended?
>
> 5. Would a judgment of infringement in this case violate *Warner-Jenkinson*'s requirement that the application of the doctrine of equivalents "is not allowed such broad play as to eliminate [an] element in its entirety," 520 U.S. at 29, 117 S. Ct. 1040. In other words, would such a judgment of infringement, post *Warner-Jenkinson*, violate the "all elements" rule?

Festo Corp. v. Shoketsu Kinzoku Kogyo Kabushiki Co., 187 F.3d 1381, 1381- 82, 51 U.S.P.Q.2d 1959, 1959-60 (Fed. Cir. 1999) ("*Festo V*").

We begin with a brief synopsis of our answers to the en banc questions and a summary of how those answers affect the disposition of this appeal. In response to En Banc Question 1, we hold that "a substantial reason related to patentability" is not limited to overcoming prior art, but includes other reasons related to the statutory requirements for a patent. Therefore, an amendment that narrows the scope of a claim for any reason related to the statutory requirements for a patent will give rise to prosecution history estoppel with respect to the amended claim element.[1] In response to En Banc Question 2, we hold

---

[1] In our prior cases, we have used both the term "element" and the term "limitation" to refer to words in a claim. *See, e.g., Lemelson v. United States*, 752 F.2d 1538, 1551, 224 U.S.P.Q. 526, 533 (Fed. Cir. 1985) (using the term "element"); *Sextant Avionique, S.A. v. Analog Devices, Inc.*, 172 F.3d 817, 826-27, 49 U.S.P.Q.2d 1865, 1870-71 (Fed. Cir. 1999) (using the (continued...)

that "voluntary" claim amendments are treated the same as other claim amendments; therefore, any voluntary amendment that narrows the scope of a claim for a reason related to the statutory requirements for a patent will give rise to prosecution history estoppel with respect to the amended claim element. In response to En Banc Question 3, we hold that when a claim amendment creates prosecution history estoppel, no range of equivalents is available for the amended claim element. In response to En Banc Question 4, we hold that "unexplained" amendments are not entitled to any range of equivalents. We do not reach En Banc Question 5, for reasons which will become clear in our discussion of the specific case before us.

In view of our answers to the en banc questions, we reverse the judgment that claim 1 of the Stoll patent and claims 5, 6, and 9 of the Carroll patent were infringed under the doctrine of equivalents. The claim elements that were found to be infringed by equivalents were added during prosecution of the Stoll patent and during reexamination of the Carroll patent. The amendments that added those elements narrowed the scope of the claims. Festo has not established explanations unrelated to patentability for these amendments; accordingly, no range of equivalents is available for the amended claim elements. Because the parties agree that SMC does not produce a device that literally satisfies those claim elements, the judgment of infringement must be reversed.

Section I of this opinion provides a brief overview of the doctrine of equivalents and prosecution history estoppel. Section II discusses the Supreme Court's decision in

---

[1] (...continued)
term "limitation"). It is preferable to use the term "limitation" when referring to claim language and the term "element" when referring to the accused device. *See Dawn Equip. Co. v. Kentucky Farms, Inc.*, 140 F.3d 1009, 1014 n. 1, 46 U.S.P.Q.2d 1109, 1112 n. 1 (Fed. Cir. 1998). However, because the en banc questions use the term "element," we use that term in this opinion.

Warner-Jenkinson. Section III sets forth our answers to the en banc questions. In Section IV, we decide the appeal before us by applying our answers to the en banc questions to the facts of the case.

DISCUSSION

I. The Doctrine of Equivalents and Prosecution History Estoppel

The doctrine of equivalents prevents an accused infringer from avoiding liability for infringement by changing only minor or insubstantial details of a claimed invention while retaining the invention's essential identity. *Graver Tank & Mfg. Co. v. Linde Air Prods. Co.*, 339 U.S. 605, 608 (1950). The doctrine of equivalents is utilized "'[t]o temper unsparing logic and prevent an infringer from stealing the benefit of the invention.'" *Id.* (quoting *Royal Typewriter Co. v. Remington Rand, Inc.*, 168 F.2d 691, 692, 77 U.S.P.Q. 517, 518 (2d Cir. 1948) (Hand, J.)). In pursuing these goals, the doctrine attempts to strike a balance between ensuring that the patentee enjoys the full benefit of his patent and ensuring that the claims give "fair notice" of the patent's scope. *London v. Carson Pirie Scott & Co.*, 946 F.2d 1534, 1538, 20 U.S.P.Q.2d 1456, 1458-59 (Fed. Cir. 1991). This balance can be easily upset, however, because "the doctrine of equivalents, when applied broadly, conflicts with the definitional and public-notice functions of the statutory claiming requirement." *Warner-Jenkinson*, 520 U.S. at 29.

Prosecution history estoppel is one tool that prevents the doctrine of equivalents from vitiating the notice function of claims. *Charles Greiner & Co. v. Mari-Med Mfg., Inc.*, 962 F.2d 1031, 1036, 22 U.S.P.Q.2d 1526, 1529-30 (Fed. Cir. 1992). Actions by the patentee, including claim amendments and arguments made before the Patent Office, may give rise to prosecution history estoppel. *Pharmacia & Upjohn Co. v. Mylan Pharms., Inc.*, 170 F.3d 1373, 1376-77, 50 U.S.P.Q.2d 1033, 1036 (Fed. Cir. 1999). "Prosecution history estoppel

precludes a patentee from obtaining under the doctrine of equivalents coverage of subject matter that has been relinquished during the prosecution of its patent application." *Id.* at 1376, 170 F.3d 1373, 50 U.S.P.Q.2d at 1036. Therefore, "[t]he doctrine of equivalents is subservient to . . . [prosecution history] estoppel." *Autogiro Co. v. United States*, 181 Ct. Cl. 55, 384 F.2d 391, 400-01, 155 U.S.P.Q. 697, 705 (1967). The logic of prosecution history estoppel is that the patentee, during prosecution, has created a record that fairly notifies the public that the patentee has surrendered the right to claim particular matter as within the reach of the patent.

II. *Warner-Jenkinson*

In this en banc rehearing, we focus our attention on the effect of *Warner-Jenkinson* on our case law relating to the doctrine of equivalents and prosecution history estoppel. *Festo V*, 187 F.3d at 1381-82, 51 U.S.P.Q.2d at 1959-60; *see also Shoketsu Kinzoku Kogyo Kabushiki Co. v. Festo Corp.*, 520 U.S. 1111, (1997) ("*Festo III*") (remanding the case for further consideration in light of the *Warner-Jenkinson* decision).

The patent before the Court in *Warner-Jenkinson* disclosed an improved process for purifying dyes which used a method called "ultrafiltration." *Warner-Jenkinson*, 520 U.S. at 21. During prosecution, the patentee amended the claims to recite that the process is carried out "at a pH from approximately 6.0 to 9.0." *Id.* at 22. The accused process was carried out at a pH of 5.0. *Id.* at 23. In light of these facts, the Supreme Court embarked on an "endeavor to clarify the proper scope of the doctrine" of equivalents. *Id.* at 21.

The Court dismissed the arguments of Warner-Jenkinson (the alleged infringer) that the doctrine of equivalents, as established in *Graver Tank*, did not survive the 1952 revision of the Patent Act. *Id.* at 25-27. The Court nevertheless noted its concern that "the doctrine of equivalents, as it has come to be applied since *Graver Tank*, has taken on a life of its own." *Id.* at 28-29. The Court agreed with Warner-Jenkinson "that

Graver Tank did not dispose of prosecution history estoppel as a legal limitation on the doctrine of equivalents." *Id.* at 30. However, the Court rejected Warner-Jenkinson's argument "that the reason for an amendment during patent prosecution is irrelevant to any subsequent estoppel." *Id.* The Court noted that "[i]n each of our cases cited by petitioner and by the dissent below, prosecution history estoppel was tied to amendments made to avoid the prior art, or otherwise to address a specific concern—such as obviousness—that arguably would have rendered the claimed subject matter unpatentable." *Id.* at 30-31. The Court therefore saw "no substantial cause for requiring a more rigid rule invoking an estoppel regardless of the reasons for a change." *Id.* at 32 (footnote omitted).

Turning to the facts at hand, the Court noted that, although the parties did not dispute that the upper pH limit of 9.0 was added to avoid the prior art, "the reason for adding the lower limit of 6.0 is unclear." *Id.* Presented "with the problem . . . where the record seems not to reveal the reason for including the lower pH limit of 6.0," the Court "place[d] the burden on the patent holder to establish the reason for an amendment required during patent prosecution." *Id.* at 33. The Court stated that courts will have to "decide whether the [proffered] reason is sufficient to overcome prosecution history estoppel as a bar to application of the doctrine of equivalents to the element added by that amendment." *Id.* The Court also stated that "[w]here no explanation is established, . . . the court should presume that the patent applicant had a substantial reason related to patentability for including the limiting element added by the amendment." *Id.* Therefore, "prosecution history estoppel would bar the application of the doctrine of equivalents as to that element." *Id.* Because Hilton Davis had "not proffered in . . . [the Supreme] Court a reason for the addition of the lower pH limit," the Court remanded the case for this court to consider whether Hilton Davis had offered reasons for the amendment that added the lower pH limit and

to determine whether Hilton Davis should be given the opportunity to establish such reasons. *Id.* at 34.

The Court rejected the other restrictions on the doctrine of equivalents proposed by Warner-Jenkinson. *Id.* at 35-40. Specifically, the Court refused to "require judicial exploration of the equities of a case before allowing application of the doctrine of equivalents," *id.* at 34, refused to require "proof of intent" on the part of the alleged infringer before the doctrine of equivalents could be applied, *id.* at 35-36, and refused to adopt "independent experimentation" as "an equitable defense to the doctrine of equivalents," *id.* at 36. The Court also refused to limit the doctrine of equivalents "to equivalents that are disclosed within the patent itself," reasoning that the "proper time for evaluating equivalency . . . is at the time of infringement, not at the time the patent was issued." *Id.* at 37.

In closing, the Court stated that it chose to "adhere to the doctrine of equivalents," which "should be applied as an objective inquiry on an element-by-element basis." *Id.* at 40. The Court noted that "[p]rosecution history estoppel continues to be available as a defense to infringement." *Id.* However, "if the patent holder demonstrates that an amendment required during prosecution had a purpose unrelated to patentability, a court must consider that purpose in order to decide whether an estoppel is precluded." *Id.* at 40-41. If "the patent holder is unable to establish such a purpose, a court should presume that the purpose behind the required amendment is such that prosecution history estoppel would apply." *Id.* at 41.

III. Answers to the En Banc Questions

A. Question 1

> For the purposes of determining whether an amendment to a claim creates prosecution history estoppel, is "a substantial reason related to patentability," *Warner-Jenkinson Co. v. Hilton Davis Chem. Co.*, 520 U.S. 17, 33 (1997), limited to those amendments made to overcome prior art under § 102 and § 103, or does "patentability" mean any reason affecting the issuance of a patent?

We answer Question 1 as follows: For the purposes of determining whether an amendment gives rise to prosecution history estoppel, a "substantial reason related to patentability" is not limited to overcoming or avoiding prior art, but instead includes any reason which relates to the statutory requirements for a patent. Therefore, a narrowing amendment made for any reason related to the statutory requirements for a patent will give rise to prosecution history estoppel with respect to the amended claim element.

It is true that in *Warner-Jenkinson* the Supreme Court focused on claim amendments made to overcome or avoid prior art. *Warner-Jenkinson*, 520 U.S. at 30-34. However, there are a number of statutory requirements that must be satisfied before a valid patent can issue and that thus relate to patentability. In addition to satisfying the novelty and non-obviousness requirements of 35 U.S.C. §§ 102 and 103, 35 U.S.C.A. §§ 102, 103 (West 1994 & Supp. 2000), the claims must be directed to patentable subject matter and the claimed invention must be useful, as set forth in 35 U.S.C. § 101 (1994). Additionally, the first paragraph of 35 U.S.C. § 112 requires that the patent specification describe, enable, and set forth the best mode of carrying out the invention, 35 U.S.C. § 112, ¶ 1 (1994), while the second paragraph of section 112 requires that the claims set forth the subject matter that the applicant regards as his invention and that the claims particularly point out and distinctly define the invention, 35 U.S.C. § 112, ¶ 2 (1994). The Patent Office will reject a patent application that fails to satisfy any one of these statutory requirements. *See Man. Pat. Exam. P.* 2100- 1 to -173 (7th ed. rev. 1 1998). And any one of these requirements may be a ground for invalidating an issued patent. *E.g.*, 35 U.S.C. § 282 (1994); *Atlas Powder Co. v. Ireco, Inc.*, 190 F.3d 1342, 51 U.S.P.Q.2d 1943 (Fed. Cir. 1999) (holding a patent invalid because the claims were

anticipated under 35 U.S.C. § 102); *Mitsubishi Elec. Corp. v. Ampex Corp.*, 190 F.3d 1300, 51 U.S.P.Q.2d 1910 (Fed. Cir. 1999) (holding a patent invalid because the claims were obvious under 35 U.S.C. § 103); *State Street Bank & Trust Co. v. Signature Fin. Group, Inc.*, 149 F.3d 1368, 47 U.S.P.Q.2d 1596 (Fed. Cir. 1998) (discussing the patentable subject matter requirement of 35 U.S.C. § 101); *Process Control Corp. v. HydReclaim Corp.*, 190 F.3d 1350, 52 U.S.P.Q.2d 1029 (Fed. Cir. 1999) (holding a patent invalid because the claims were inoperative and therefore failed to satisfy the utility requirement of 35 U.S.C. § 101); *Johnson Worldwide Assoc., Inc. v. Zebco Corp.*, 175 F.3d 985, 50 U.S.P.Q.2d 1607 (Fed. Cir. 1999) (considering whether a patent claim was invalid under the written description requirement of § 112, ¶ 1); *Gentry Gallery, Inc. v. Berkline Corp.*, 134 F.3d 1473, 45 U.S.P.Q.2d 1498 (Fed. Cir. 1998) (holding claims of a patent invalid for failing to comply with the written description requirement of § 112, ¶ 1); *Enzo Biochem, Inc. v. Calgene, Inc.*, 188 F.3d 1362, 52 U.S.P.Q.2d 1129 (Fed. Cir. 1999) (holding a patent invalid because the claims were not enabled, as required by 35 U.S.C. § 112, ¶ 1); *United States Gypsum Co. v. Nat'l Gypsum Co.*, 74 F.3d 1209, 37 U.S.P.Q.2d 1388 (Fed. Cir. 1996) (holding a patent invalid for failing to satisfy the best mode requirement of 35 U.S.C. § 112, ¶ 1); *Morton Int'l, Inc. v. Cardinal Chem. Co.*, 5 F.3d 1464, 28 U.S.P.Q.2d 1190 (Fed. Cir. 1993) (holding a patent invalid because the claims failed to satisfy the definiteness requirement of 35 U.S.C. § 112, ¶ 2). An amendment related to any of these statutory requirements is an amendment made for "a substantial reason related to patentability."

The law has been clear that amendments made to avoid prior art give rise to prosecution history estoppel. *E.g.*, *Warner-Jenkinson*, 520 U.S. at 30-31 (discussing *Exhibit Supply Co. v. Ace Patents Corp.*, 315 U.S. 126 (1942), and *Keystone Driller Co. v. Northwest Eng'g Corp.*, 294 U.S. 42, (1935)). In view of the functions of prosecution history

estoppel—preserving the notice function of the claims and preventing patent holders from recapturing under the doctrine of equivalents subject matter that was surrendered before the Patent Office—we see no reason why prosecution history estoppel should not also arise from amendments made for other reasons related to patentability, as described above. Indeed, the functions of prosecution history estoppel cannot be fully satisfied if substantial reasons related to patentability are limited to a narrow subset of patentability issues. Rather, substantial reasons related to patentability include 35 U.S.C. §§ 101 and 112 issues, as well as 35 U.S.C. §§ 102 and 103 issues.

While we do not believe that the Supreme Court itself answered this question in *Warner-Jenkinson*, we do believe that our answer is not inconsistent with *Warner-Jenkinson*. *Warner-Jenkinson* describes prior cases as applying prosecution history estoppel "*typically* because what [was previously claimed] . . . was encompassed within the prior art," 520 U.S. at 31 (emphasis added), but no language in *Warner-Jenkinson* limits prosecution history estoppel to amendments made to avoid prior art. *See also Crawford v. Heysinger*, 123 U.S. 589, 606 (1887) (finding prosecution history estoppel to arise from amendments made in response to operability rejections). Moreover, our approach is consistent with *Warner-Jenkinson*'s requirement that an amendment "does not necessarily preclude infringement by equivalents of that element." *Id.* at 33. Thus, if a patent holder can show from the prosecution history that a claim amendment was not motivated by patentability concerns, the amendment will not give rise to prosecution history estoppel.

B. Question 2

Under *Warner-Jenkinson*, should a "voluntary" claim amendment—one not required by the examiner or made in response to a rejection by an examiner for a stated reason—create prosecution history estoppel?

We answer Question 2 as follows: Voluntary claim amendments are treated the same as other amendments. Therefore, a voluntary amendment that narrows the scope of a claim for a reason related to the statutory requirements for a patent will give rise to prosecution history estoppel as to the amended claim element.

Both voluntary amendments and amendments required by the Patent Office signal to the public that subject matter has been surrendered. There is no reason why prosecution history estoppel should arise if the Patent Office rejects a claim because it believes the claim to be unpatentable, but not arise if the applicant amends a claim because he believes the claim to be unpatentable.

Our answer to this question is consistent with the doctrine of argument-based estoppel. Arguments made voluntarily during prosecution may give rise to prosecution history estoppel if they evidence a surrender of subject matter. *E.g.*, *KCJ Corp. v. Kinetic Concepts, Inc.*, 223 F.3d 1351, 1359-60, 55 U.S.P.Q.2d 1835, 1841-42 (Fed. Cir. 2000) (concluding that "KCJ's statements [during prosecution] reflect a clear and unmistakable surrender" of subject matter that cannot be reclaimed through the doctrine of equivalents); *Bayer AG v. Elan Pharm. Research Corp.*, 212 F.3d 1241, 1252-53, 54 U.S.P.Q.2d 1711, 1719 (Fed. Cir. 2000) (finding that "through [Bayer's] statements to the PTO and the declarations it filed, Bayer made statements of clear and unmistakable surrender of subject matter" which it could not recapture through the doctrine of equivalents); *Pharmacia & Upjohn*, 170 F.3d at 1377, 50 U.S.P.Q.2d at 1036 ("A number of activities during prosecution may give rise to prosecution history estoppel, . . . including arguments made to obtain allowance of the claims at issue." (citation omitted)); *Southwall Techs., Inc. v. Cardinal IG Co.*, 54 F.3d 1570, 1583, 34 U.S.P.Q.2d 1673, 1682 (Fed. Cir. 1995) ("Clear assertions made during prosecution in support of patentability, whether or not actually required to secure allowance of the claim, may . . . create an estoppel."); *Texas Instruments Inc. v. United States Int'l Trade Comm'n*, 988 F.2d 1165, 1174, 26 U.S.P.Q.2d 1018, 1025 (Fed. Cir. 1993) (holding that arguments made during prosecution that emphasized one feature of the invention estopped the patent holder from asserting that a device lacking that feature infringed the patent under the doctrine of equivalents). There is no reason why an amendment-based surrender of subject matter should be given less force than an argument-based surrender of subject matter.

We also believe that our answer to this question is consistent with *Warner- Jenkinson*. Although the Supreme Court spoke of "required" amendments, the claim amendment at issue in *Warner-Jenkinson*, the addition of the lower pH limit of 6, was not "required" by the prior art rejection. The original claim recited an ultrafiltration process. *Warner-Jenkinson*, 520 U.S. at 21. The asserted prior art reference taught an ultrafiltration process conducted at a pH of above 9. *Id.* at 22. The amended claim recited an ultrafiltration process conducted "at a pH from approximately 6.0 to 9.0." *Id.* The parties did not dispute that the upper pH limit of 9.0 was added to distinguish the prior art. *Id.* at 32. The Court, however, was unable to discern the reason for the addition of the lower pH limit of 6. *Id.* at 32-33. Accordingly, the amendment at issue in *Warner-Jenkinson* appears to have been voluntary with respect to the lower pH limit. Nevertheless, the Court held that the amendment adding the lower pH limit could give rise to prosecution history estoppel. *Id.* at 34.

C. Question 3

> If a claim amendment creates prosecution history estoppel, under *Warner-Jenkinson* what range of equivalents, if any, is available under the doctrine of equivalents for the claim element so amended?

We answer Question 3 as follows: When a claim amendment creates prosecution history estoppel with regard to

a claim element, there is no range of equivalents available for the amended claim element. Application of the doctrine of equivalents to the claim element is completely barred (a "complete bar").

We think it is fair to say that the question of the scope of equivalents available when prosecution history estoppel applies to a claim element has not been directly addressed or answered by the Supreme Court, at least in circumstances where the claim was amended for a known patentability reason. In *Warner-Jenkinson*, the Court focused its attention more on the circumstances under which prosecution history estoppel arises than on the range of equivalents that might generally be available despite the existence of prosecution history estoppel. *Warner-Jenkinson*, 520 U.S. at 30-34. The Court did not discuss the upper pH limit of 9.0, other than to note that the upper limit, which narrowed the claim, was selected to overcome prior art. *Id.* at 32. The range of equivalents, if any, that could be asserted for the upper pH limit was not discussed by the Court. The only statements in *Warner-Jenkinson* as to the range of equivalents that is available when prosecution history estoppel applies are found in the Court's discussion of unexplained amendments. *Id.* at 33-34. For those amendments, the Court held that "prosecution history estoppel would bar the application of the doctrine [of] equivalents as to that element." *Id.* at 33.

1. In cases before *Warner-Jenkinson*, the Supreme Court applied prosecution history estoppel to preclude a finding of infringement under the doctrine of equivalents, but the Court did not analyze the actual scope of equivalents that might be available when prosecution history estoppel applied, i.e., the extent of the subject matter surrendered by amendment. In *Weber Electric Co. v. E.H. Freeman Electric Co.*, 256 U.S. 668 (1921), the patentee had amended his claim to an electric lamp socket to overcome prior art that taught a socket and electric bulb that were unlocked and locked together simply by rotation. The amended claim recited, instead, a bulb and socket

combination that unlocked and locked by manual compression. *Id.* at 677. In light of this amendment, the Court did not allow the patentee, who had "narrowed his claim . . . to obtain a patent," to "resort to the doctrine of equivalents [and] give to the claim the larger scope which it might have had without the amendment." *Id.* Under the facts of the case, the alleged infringer practiced the exact subject matter described in the prior art, a combination that locked the bulb by rotational movement. *Id.* at 678. Thus, the Court did not need to discuss the precise contours of the subject matter surrendered by the claim amendment. A similar situation was presented in *Smith v. Magic City Kennel Club*, 282 U.S. 784 (1931). The invention at issue in that case involved an artificial dog race track lure. *Id.* at 786-87. The patentee overcame prior art that disclosed a straight arm for holding the lure by amending his claims to recite a hinged arm. *Id.* at 788-89. The accused infringer's device used a rigid arm. *Id.* The Court did not allow the patentee to resort to the doctrine of equivalents to regain the specific subject matter the patentee had surrendered "in order to escape rejection." *Id.* at 790.

In *Magic City Kennel Club*, as in *Weber*, the accused device read on the prior art, which in and of itself mandates a finding of noninfringement, *see Wilson Sporting Goods Co. v. David Geoffrey & Assocs.*, 904 F.2d 677, 683-85, 14 U.S.P.Q.2d 1942, 1947-49 (Fed. Cir. 1990) (noting that the doctrine of equivalents cannot be applied to encompass the prior art). In *Exhibit Supply Co. v. Ace Patents Corp.*, 315 U.S. 126 (1942), the patentee amended the claim at issue to overcome general prior art cited by the examiner. He did so by changing the claim to recite a conductor device that was "embedded in" a game table (pinball machine) instead of one that was "carried by" the table. *Exhibit Supply*, 315 U.S. at 136-37. The Court held that the patentee could not thereafter, through the doctrine of equivalents, obtain coverage of accused devices in which the "conductor means" was carried by the game table instead of imbedded in it. *Id.* It is unclear from the Court's opinion

whether the accused device was in the prior art cited by the examiner in his rejection. *Id.* at 133 (quoting the examiner's assertion that it was plainly "old in the art to make an electrical contact by flexing a coil spring as shown by the art already cited in the case"). The Court stated, however:

> Had Claim 7 been allowed in its original form, it would have read upon all the accused devices, since in all the conductor means complementary to the coil spring are "carried by the table." By striking that phrase from the claim and substituting for it "embedded in the table," the applicant restricted his claim to those combinations in which the conductor means, though carried on the table, is also embedded in it. By the amendment, he recognized and emphasized the difference between the two phrases and proclaimed his abandonment of all that is embraced in that difference.

Id. at 136. The Court never addressed the exact range of equivalents that might still be available under the amended claim, and the "difference between" the original claim and the amended claim, the difference said by the Court to have been abandoned by the patentee, was never explicitly defined.

In his dissenting opinion, Judge Michel relies upon *Goodyear Dental Vulcanite Co. v. Davis*, 102 U.S. 222, and *Hurlbut v. Schillinger*, 130 U.S. 456 (1889), for the proposition that a patentee is entitled to a range of equivalents despite the fact that the scope of a claim has been limited by amendment. We do not believe, however, that either of these cases addresses the issue presented in En Banc Question 3: the range of equivalents, if any, that is available under the doctrine of equivalents for a claim element that has been amended by an amendment that creates prosecution history estoppel.

As issued, the claim in *Goodyear* described "rubber or some other elastic material" for a dental plate. *Goodyear*, 102 U.S.

at 224-25. During reissue the claim was amended to describe a dental plate of hard or "vulcanized" rubber. *Id.* at 228. Looking to the reissue amendment, the Court concluded that the patentee "regarded the patent to be for a manufacture made exclusively of vulcanites by the detailed process." *Id.* The Court determined that there could be no infringement where the defendant's product used celluloid. *Id.* at 229-30. The Court did not discuss prosecution history estoppel, but simply decided that under the language of the reissued patent celluloid was not equivalent to "hard rubber or vulcanite or its equivalent."

Hurlbut involved a patent which had been reissued and in which a disclaimer had been filed. *Hurlbut*, 130 U.S. at 462-63. The reissue added a second claim, but did not amend any claim language. *Id.* Claim 1 recited "[a] concrete pavement laid in detached blocks or sections, substantially in the manner shown and described." *Id.* at 463. Claim 2 recited an "arrangement of tar paper, or its equivalent, between adjoining blocks of concrete, substantially as and for the purpose set forth." *Id.* The patentee disclaimed "the forming of blocks from plastic material without interposing anything between their joints while in the process of formation." *Id.* In the face of this disclaimer, the Court construed the claims to require that the division of the concrete paving blocks be "effected by either a permanent or temporary imposition of something between the blocks." *Id.* at 465. The Court held that both claims were infringed by a process in which a trowel was used to cut a concrete layer into blocks. *Id.* at 469. In referring to equivalents the Court was referring to the language of the claims ("substantially" in claim 1 and "or its equivalents" in claim 2). Thus, the Court did not discuss the issue of the scope of equivalents that remained under the doctrine of equivalents after the disclaimer.

Neither do we believe that in any of the other cases noted by Judge Michel did the Court determine that a claim element that was amended by an amendment that gave rise to prosecution history estoppel was entitled to a range of equivalents. *See Cal.*

Artificial Stone-Pav Co. v. Schalicke, 119 U.S. 401, 407 (1886) (stating that there was no infringement "under any construction which it is possible to give the claims"); *Fay v. Cordesman*, 109 U.S. 408, 420-21 (1883) (finding that the accused device lacked material elements of the claimed inventions without discussing prosecution history estoppel or the doctrine of equivalents); *Shepard v. Carrigan*, 116 U.S. 593, 597-98 (1886) (reversing a judgment of infringement and noting that the prior art and the accused device depicted a skirt protector without a "fluted or plaited band or border," while the patent described a skirt protector with such a border); *Sutter v. Robinson*, 119 U.S. 530, 541-42 (1886) (reversing a judgment of infringement and stating that the prior art and the accused device involved a metal box for storing tobacco leaves, while the patent described a wooden box); *Phoenix Caster Co. v. Spiegel*, 133 U.S. 360, 364, 368-69 (1890) (holding that there was no infringement because the accused device did not have, as the claim recited, a "rocker-formed collar-bearing, or its mechanical equivalent"); *Royer v. Coupe*, 146 U.S. 524, 531-32 (1892) (determining that the defendants could not infringe "under the proper construction of the claim of the patent" because the process they practiced lacked an element of the claimed process); *Hubbell v. United States*, 179 U.S. 77, 80, 85 (1900) (using prosecution history to construe the claim and finding no infringement, without discussing prosecution history estoppel).

In short, the range of equivalents available to an amended claim element simply was not before the Supreme Court in the cases Judge Michel cites, and the Supreme Court did not discuss the issue presented in En Banc Question 3. Although a court must follow "explicit and carefully considered" language of the Supreme Court, *see Stone Container Corp. v. United States*, 229 F.3d 1345, 1350 (Fed. Cir. 2000), none of the language cited by Judge Michel constitutes explicit and carefully considered language regarding the range of

equivalents available when a claim amendment gives rise to prosecution history estoppel.

2. Because the Supreme Court has not fully addressed the range of equivalents that is available once prosecution history estoppel applies, we must independently decide the issue. Congress specifically created the Federal Circuit to resolve issues unique to patent law, *Markman v. Westview Instruments, Inc.*, 517 U.S. 370, 390 (1996) (citing H.R. Rep. No. 97-312, pp. 20-23 (1981)), such as those regarding prosecution history estoppel, which is a judicially created doctrine, *Hormone Research Found., Inc. v. Genentech, Inc.*, 904 F.2d 1558, 1564, 15 U.S.P.Q.2d 1039, 1044 (Fed. Cir. 1990). Congress contemplated that the Federal Circuit would "strengthen the United States patent system in such a way as to foster technological growth and industrial innovation." *Markman*, 517 U.S. at 390. Issues such as the one before us in this case are properly reserved for this court to answer with "its special expertise." *Warner-Jenkinson*, 520 U.S. at 40 (reserving explicitly for the Federal Circuit the task of formulating the proper test(s) for infringement under the doctrine of equivalents).

The Federal Circuit first addressed the range of equivalents that is available when prosecution history applies in *Hughes Aircraft Co. v. United States*, 717 F.2d 1351, 219 U.S.P.Q. 473 (Fed. Cir. 1983) ("*Hughes I*"). In that case, we recognized that, prior to creation of the Federal Circuit, some regional circuits had followed a flexible bar approach to prosecution history estoppel, whereas others had applied a strict rule of complete surrender when prosecution history estoppel applied. *Id.* at 1362-63, 219 U.S.P.Q. at 481-82. We decided to apply prosecution history estoppel as a flexible bar, stating that prosecution history estoppel "may have a limiting effect" on the doctrine of equivalents "within a spectrum ranging from great to small to zero." *Id.* at 1363, 219 U.S.P.Q. at 481-82.

LaBounty Manufacturing, Inc. v. United States International Trade Commission, 867 F.2d 1572, 9 U.S.P.Q.2d 1995 (Fed.

Cir. 1989), is an example of the flexible bar approach. In *LaBounty*, we vacated the noninfringement determination of the International Trade Commission ("ITC") and remanded the case to the ITC for further proceedings because the administrative law judge ("ALJ") had failed to determine the scope of prosecution history estoppel and had held, instead, that once an element of a claim is amended, no equivalent of that element can be asserted. *LaBounty*, 867 F.2d at 1576, 9 U.S.P.Q.2d at 1999. In *Black & Decker, Inc. v. Hoover Service Center*, 886 F.2d 1285, 1295, 12 U.S.P.Q.2d 1250, 1258-59 (Fed. Cir. 1989), we held that an amendment made during prosecution did not prevent a finding of infringement under the doctrine of equivalents. We reasoned that although the amendment would bar infringement under the doctrine of equivalents with respect to a device similar to the prior art that had provoked the amendment, prosecution history estoppel did not prevent all applications of the doctrine of equivalents. *Id.*; *see also Dixie USA, Inc. v. Infab Corp.*, 927 F.2d 584, 588, 17 U.S.P.Q.2d 1968, 1970-71 (Fed. Cir. 1991) (noting that prosecution history estoppel should not cause "a total preclusion of equivalence"). Similarly, in *Modine Manufacturing Co. v. United States International Trade Commission*, 75 F.3d 1545, 1555-56, 37 U.S.P.Q.2d 1609, 1616 (Fed. Cir. 1996), we vacated the ALJ's holding of lack of infringement under the doctrine of equivalents due to prosecution history estoppel because, although "the available range of equivalency is limited, by estoppel, . . . the prosecution history and the prior art do not eliminate equivalents."

Less than a year after *Hughes I*, however, a five-judge panel of this court decided *Kinzenbaw v. Deere & Co.*, 741 F.2d 383, 222 U.S.P.Q. 929 (Fed. Cir. 1984). The claimed invention in *Kinzenbaw* was "[a]n apparatus for forming seed planting furrows." *Id.* at 388, 222 U.S.P.Q. at 932. The claim element at issue related to "a pair of depth gauge compacting wheels" that controlled the depth of the furrow created by the planter. *Id.* During prosecution, in order to overcome an examiner's

rejection and to obtain his patent, the inventor narrowed his claims by specifying, among other things, that the gauge wheels had to have a radius less than that of the radius of the blades of the planter (called "discs"). *Id.* On the accused device, the gauge wheels had a radius greater than that of the discs. *Id.* at 388- 89, 222 U.S.P.Q. at 932. Consequently, the accused device could not literally infringe. As a result, the patentee (Deere) sought to prove infringement under the doctrine of equivalents. *Id.* at 389, 222 U.S.P.Q. at 932. The district court concluded that prosecution history estoppel precluded Deere from relying upon the doctrine of equivalents. *Id.*, 222 U.S.P.Q. at 933. The court determined that, as far as the gauge wheels were concerned, the inventor had intentionally narrowed his claims, and it refused to permit Deere to avoid, through the doctrine of equivalents, the limitation that the inventor had placed on his claims. *Id.*

On appeal, Deere urged that prosecution history estoppel did not apply because the inventor's limitation of his claims to devices in which the gauge wheels had a smaller radius than that of the discs was unnecessary to distinguish the prior art. *Id.* Specifically, Deere contended that only that portion of the claim that provided that the radius of the gauge wheels had to exceed the distance from the axes of the wheels to the rear edges of the discs was necessary in order to render the claims patentable over the prior art. *Id.* The five-judge panel rejected Deere's argument. It stated: "We decline to undertake the speculative inquiry whether, if . . . [the inventor] had made only that narrowing limitation in his claim, the examiner nevertheless would have allowed it." *Id.* The court therefore affirmed the district court's judgment of noninfringement. *Id.* at 391, 222 U.S.P.Q. at 934.

The approach to prosecution history estoppel that was followed in *Kinzenbaw* prompted the following observation by Professor Chisum: "Beginning shortly after its creation in 1982, the Federal Circuit developed two lines of authority on the scope of an estoppel based on an amendment or argument

that distinguished the prior art. One line followed a strict approach, according to which a court refused to speculate whether a narrower amendment would have been allowed. The other line followed a flexible or spectrum approach, which recognized that amendments did not invariably preclude all equivalence . ...." 5A Donald S. Chisum, *Chisum on Patents* § 18.05[3][b], at 18-492 (1998). Soon after *Hughes I* and *Kinzenbaw* were decided they were the subject of comment in the American University Law Review, which annually reviews the work of the Federal Circuit. The commentators stated that the Federal Circuit's "two divergent lines of authority dealing with prosecution history estoppel," the *Hughes I* line and the *Kinzenbaw* line, had given rise to ever- increasing "uncertainty and confusion" in patent litigation. Douglas A. Strawbridge et al., Area Summary, *Patent Law Developments in the United States Court of Appeals for the Federal Circuit During 1986*, 36 Am. U.L. Rev. 861, 887-88 (1987). The commentary that began after *Hughes I* and *Kinzenbaw* were decided has continued. *See, e.g.*, Gregory J. Smith, *The Federal Circuit's Modern Doctrine of Equivalents in Patent Infringement*, 29 Santa Clara L. Rev. 901, 921 (1989) (noting that there is at least an "apparent conflict" between *Hughes I* and *Kinzenbaw*); Note, *To Bar or Not to Bar: Prosecution History Estoppel After Warner-Jenkinson*, 111 Harv. L. Rev. 2330, 2336 (1998) (stating that the *Hughes I* line of cases "appear[s] to be irreconcilable" with the *Kinzenbaw* line of cases).

Since *Warner-Jenkinson*, panels of this court have continued to visit the question of the range of equivalents that is available after prosecution history estoppel has been determined to exist. Two cases in particular were remanded by the Supreme Court for further consideration in light of *Warner-Jenkinson*. *Honeywell, Inc. v. Litton Sys., Inc.*, 520 U.S. 1111 (1997); *United States v. Hughes Aircraft Co.*, 520 U.S. 1211 (1997). In *Litton Systems, Inc. v. Honeywell, Inc.*, 140 F.3d 1449, 1455-57, 46 U.S.P.Q.2d 1321, 1325 (Fed. Cir. 1998), this court determined that *Warner-Jenkinson* had not changed the

"longstanding doctrine that an estoppel only bars recapture of that subject matter actually surrendered during prosecution." The court noted that "the Supreme Court did not reach the question of the proper scope of estoppel for an amended limitation," and thus concluded that *Warner-Jenkinson* did not affect our already established jurisprudence on the issue. *Id.* at 1457, 46 U.S.P.Q.2d at 1327. A similar analysis and conclusion were set forth in *Hughes Aircraft Co. v. United States*, 140 F.3d 1470, 1476-77, 46 U.S.P.Q.2d 1285, 1289-90 (Fed. Cir. 1998) ("*Hughes II*"). The alleged infringer in that case argued that *Warner-Jenkinson* mandated that prosecution history estoppel act as a complete bar and preclude any finding of infringement under the doctrine of equivalents. *Hughes II*, 140 F.3d at 1476, 46 U.S.P.Q.2d at 1289. In rejecting this argument, this court stated that there must be a determination as to the exact "subject matter the patentee actually surrendered." *Id.* at 1476-77, 46 U.S.P.Q.2d at 1290. Because the accused device did not "fall within the range of subject matter surrendered," infringement under the doctrine of equivalents was not barred. *Id.* The court denied rehearing en banc in both *Litton* and *Hughes II*, over dissents from the denials. *Litton Sys., Inc. v. Honeywell, Inc.*, 145 F.3d 1472, 47 U.S.P.Q.2d 1106 (Fed. Cir. 1998); *Hughes Aircraft Co. v. United States*, 148 F.3d 1384, 47 U.S.P.Q.2d 1542 (Fed. Cir. 1998).

Both *Litton* and *Hughes II* follow the *Hughes I* flexible bar approach to prosecution history estoppel. In that regard, they are consistent with Professor Chisum's observation that "[m]ost Federal Circuit panel decisions from 1984 to 1997 followed the flexible approach, which had been initiated in 1983 by the *Hughes Aircraft* [*Hughes I*] decision . . .." Chisum, *supra*, § 18.05[3][b][i], at 18-497. Nevertheless, this court has neither repudiated *Kinzenbaw* nor reconciled the inconsistency between the *Hughes I* and *Kinzenbaw* lines of authority. Under these circumstances, it is unclear whether in any given case the court will apply the *Kinzenbaw* approach as

opposed to the more generally accepted *Hughes I* approach. Just as importantly, even if the *Hughes I* approach is applied, there is uncertainty as to the extent of the surrender that will be held to exist. Thus, Professor Chisum has discussed two Federal Circuit cases, *Sun Studs, Inc. v. ATA Equip. Leasing, Inc.*, 872 F.2d 978, 10 U.S.P.Q.2d 1338 (Fed. Cir. 1989), and *Environmental Instruments, Inc. v. Sutron Corp.*, 877 F.2d 1561, 11 U.S.P.Q.2d 1132 (Fed. Cir. 1989), as illustrating the "predictive difficulties of the flexible approach." Chisum, *supra*, § 18.05[3][b][ii], at 18-505 to 18-506. In a like vein, it has been stated that "the criteria used by the court to determine the effect of an estopping amendment have not been set forth in any clear or systematic way" and that "[t]he Federal Circuit's well-known observation that '[d]epending on the nature and purpose of an amendment, it may have a limiting effect from great to small to zero,' for example, tells little about what the relationship is between the 'nature and purpose' of an amendment and its limiting effect." Ted Apple, *Enablement Estoppel: Should Prosecution History Estoppel Arise When Claims Are Amended To Overcome Enablement Rejections?*, 13 Santa Clara Computer & High Tech L.J. 107, 128 (1997) (footnotes omitted).

3. Today, we revisit the question we first addressed in *Hughes I* and come to a different conclusion as to the proper scope of equivalents that is available when prosecution history estoppel applies than we did in that case. We hold that prosecution history estoppel acts as a complete bar to the application of the doctrine of equivalents when an amendment has narrowed the scope of a claim for a reason related to patentability. Our decision to reject the flexible bar approach adopted in *Hughes I* comes after nearly twenty years of experience in performing our role as the sole court of appeals for patent matters. In those years, the notice function of patent claims has become paramount, and the need for certainty as to the scope of patent protection has been emphasized. A problem with the flexible bar approach is that it is virtually impossible

to predict before the decision on appeal where the line of surrender is drawn. The patentee would draw the line just at or slightly short of the prior art, leaving a wide range of equivalents untouched by prosecution history estoppel. The accused infringer, however, would draw the line close to the literal terms of the claims, leaving little or no range of equivalents. These considerations, we think, contribute to the difficulty under the flexible bar approach in predicting with any degree of certainty the scope of surrender that will be found when prosecution history estoppel applies.

In reaching our holding, we are mindful of the Supreme Court's teaching that binding precedent is not to be lightly discarded. The Court has stated that stare decisis "promotes the evenhanded, predictable, and consistent development of legal principles, fosters reliance on judicial decisions and contributes to the actual and perceived integrity of the judicial process." *Payne v. Tennessee*, 501 U.S. 808, 827 (1991). The Court also has stated that while from time to time it has overruled governing decisions that are "unworkable or are badly reasoned," it has rarely done so "on grounds not advanced by the parties." *United States v. Int'l Bus. Machs. Corp.*, 517 U.S. 843, 856 (1996) (citations omitted).

We believe that the current state of the law regarding the scope of equivalents that is available when prosecution history estoppel applies is "unworkable." In patent law, we think that rules qualify as "workable" when they can be relied upon to produce consistent results and give rise to a body of law that provides guidance to the marketplace on how to conduct its affairs. After our long experience with the flexible bar approach, we conclude that its "workability" is flawed. Moreover, in overruling *Hughes I*, we are not acting "on grounds not advanced by the parties." SMC and amici curiae have urged us to follow the strict approach to prosecution history estoppel that we adopt today. In Banc Opening Br. of Defs.-Appellants SMC Corp., et al., at 49-53; *see also* Br. for Amici Curiae Int'l Bus. Machs. Corp., Eastman Kodak Co., and

Ford Motor Co., at 14-20 (arguing that no range of equivalents should be available for narrowing claim amendments).

We also believe that the flexible bar approach "poses a direct obstacle to the realization of important objectives." *Patterson v. McLean Credit Union*, 491 U.S. 164, 173 (1989) (setting forth the "traditional justification[s] for overruling a prior case"). These objectives include giving effect, when prosecution history estoppel arises, to a narrowing amendment's operation as a disclaimer of subject matter, *see, e.g.*, *Exhibit Supply*, 315 U.S. at 136-37, preserving the notice function of patent claims, *see, e.g.*, *Warner-Jenkinson*, 520 U.S. at 29, and promoting certainty in patent law, *see, e.g.*, *Markman*, 517 U.S. at 390. The realization of these objectives cannot help but be frustrated by the uncertainty inherent in the flexible bar approach.

By making prosecution history estoppel act as a complete bar, we enforce the disclaimer effect of a narrowing claim amendment. By narrowing his claims, a patentee disclaims subject matter encompassed by the original claims. *E.g.*, *Exhibit Supply*, 315 U.S. at 136-37; *Magic City Kennel Club*, 282 U.S. at 790; *Shepard*, 116 U.S. at 598 (noting that a patentee who has narrowed a claim during prosecution cannot "enlarge her patent by argument so as to cover elements not falling within its terms, and which she had explicitly abandoned"). As the Supreme Court has stated, "By amendment [the patentee] recognize[s] and emphasize[s] the difference between the" original claim and amended claim "and proclaim[s] . . . abandonment of all that is embraced in that difference." *Exhibit Supply*, 315 U.S. at 136. Amendments "must be strictly construed against the inventor and in favor of the public, and looked upon as in the nature of disclaimers." *Hubbell*, 179 U.S. at 83-84. In order to construe such amendments strictly against the patentee, no scope of equivalents can be afforded to a claim element that was narrowed because of patentability concerns. Although we do not understand older Supreme Court cases to have spoken

directly to the question before us, we think the language used in those cases suggesting a strict measurement of the scope of equivalents is consistent with our answer to this question.

Allowing some range of equivalents gives the patentee some benefit of the doubt as to what was disclaimed, a benefit that comes at the public's expense. A complete bar therefore best serves the notice and definitional function of patent claims. "The object of the patent law in requiring the patentee [to specifically define his invention] is not only to secure to him all to which he is entitled, but to apprise the public of what is still open to them." *McClain v. Ortmayer*, 141 U.S. 419, 424 (1891). But "the doctrine of equivalents, when applied broadly, conflicts with the definitional and public-notice functions of the statutory claiming requirement." *Warner-Jenkinson*, 520 U.S. at 29. If prosecution history estoppel acts as a complete bar to application of the doctrine of equivalents, both the patentee and the public are on notice as to the scope of protection provided by a claim element narrowed for a reason related to patentability. The patentee and the public can look to the prosecution history, a public record, to determine if any prosecution history estoppel arises as to any claim element. If so, that element's scope of protection is clearly defined by its literal terms.

The Supreme Court recognized the value of a complete bar in *Warner-Jenkinson* when it discussed the presumption that prosecution history estoppel applies when an amendment is unexplained. The Court, keeping in mind "that claims do indeed serve both a definitional and a notice function," held that if the presumption was not rebutted, "prosecution history estoppel would bar the application of the doctrine [of] equivalents as to that element." *Id.* at 33 (emphasis added); *see also infra* Answer to En Banc Question 4. A complete bar to the doctrine of equivalents for unexplained amendments would give, as the Court stated, "proper deference to the role of claims in defining an invention and providing public notice," *Warner-Jenkinson*, 520 U.S. at 33. A complete bar similarly serves the

definitional and notice functions when explained amendments give rise to prosecution history estoppel. Regardless of whether the amendment is explained or unexplained, if the amendment narrows the scope of the claim for a reason related to patentability, a complete bar to the doctrine of equivalents provides the public and the patentee with definite notice as to the scope of the claimed invention.

A complete bar also eliminates the public's need to speculate as to the subject matter surrendered by an amendment that narrows a claim for a reason related to patentability. There are several aspects of the prosecution history estoppel inquiry where speculation is not allowed. The Supreme Court has noted that we need not inquire into the correctness of the examiner's rejection that led to a claim amendment. *Warner-Jenkinson*, 520 U.S. at 33 n. 7 (citing *Magic City Kennel Club*, 282 U.S. at 789-90). Even if the rejection is improper, the amendment may still give rise to prosecution history estoppel. *Id.* In addition, we do not speculate as to whether any given amendment was material to the prosecution of the patent because "[t]he patentee makes them all material by the restricted form of his claim." *Hubbell*, 179 U.S. at 84 (citations omitted). In view of the reluctance to entertain speculative inquiries in other aspects of prosecution history estoppel, a speculative inquiry should not be required to determine the scope of equivalents still available for a claim element narrowed for a reason related to patentability. A complete bar avoids such an inquiry.

Under the flexible bar approach, however, the exact range of equivalents when prosecution history estoppel applies is virtually unascertainable, with only the prior art marking the outer limits of the claim's scope. There is no precise metric to determine what subject matter was given up between the original claim and the amended claim. Consider, for example, a claim that originally recited a value "less than twenty" that was amended to recite a value "less than five" in light of a

rejection over prior art disclosing a value of fifteen.[2] What subject matter was abandoned under the flexible approach? Is the patentee limited to values that are closer to five than fifteen, or can he reach any value less than fifteen? Can the patentee encompass by equivalents a value of ten, or would that recapture part of the surrendered subject matter? Put simply, it is impossible, even under this basic example, for the public or the patentee to determine the precise range of equivalents available under the flexible bar approach. This creates a "zone of uncertainty which enterprise and experimentation may enter only at the risk of infringement claims . . . [and which] discourage[s] invention only a little less than unequivocal foreclosure of the field." *Markman*, 517 U.S. at 390 (quoting *United Carbon Co. v. Binney & Smith Co.*, 317 U.S. 228, 236, (1942)). "The public [would] be deprived of rights supposed to belong to it, without being clearly told what it is that limits these rights." *Markman*, 517 U.S. at 390 (quoting *Merrill v. Yeomans*, 94 U.S. 568, 573 (1876)).

A complete bar, unlike a flexible bar, thus lends certainty to the process of determining the scope of protection afforded by a patent. With a complete bar, both the public and the patentee know that once an element of a claim is narrowed by amendment for a reason related to patentability, that element's scope of coverage will not extend beyond its literal terms. There is no speculation or uncertainty as to the exact range of equivalents that might be available. This certainty aids both the public and the patentee in ascertaining the true scope and value of the patent without having to resort to litigation to obtain a case by case analysis of what subject matter the claims can cover. With a complete bar, neither the public nor the patentee is required to pay the transaction costs of litigation in order to

---

[2] A similar problem presents itself under the facts of Warner- Jenkinson, where the claim was amended to recite an upper pH limit of 9.0 to overcome prior art disclosing a pH above 9.0. *Warner-Jenkinson*, 520 U.S. at 32.

determine the exact scope of subject matter the patentee abandoned when the patentee amended the claim.

Thus, under the complete bar approach, technological advances that would have lain in the unknown, undefined zone around the literal terms of a narrowed claim under the flexible bar approach will not go wasted and undeveloped due to fear of litigation. The public will be free to improve on the patented technology and design around it without being inhibited by the threat of a lawsuit because the changes could possibly fall within the scope of equivalents left after a claim element has been narrowed by amendment for a reason related to patentability. This certainty will stimulate investment in improvements and design-arounds because the risk of infringement will be easier to determine. In general, the difficulty in counseling the public and the patentee on the scope of protection provided by an amended element is greatly reduced under the complete bar approach due to the certainty and predictability such a bar produces.

Finally, we see no overriding benefit to the flexible bar approach. Although a flexible bar affords the patentee more protection under the doctrine of equivalents, we do not believe that the benefit outweighs the costs of uncertainty. The Supreme Court noted in *Warner-Jenkinson* that the doctrine of equivalents has "taken on a life of its own, unbounded by the patent claims." *Warner-Jenkinson*, 520 U.S. at 28-29. A complete bar reins in the doctrine of equivalents, making claim scope more discernible and preserving the notice function of claims. The Court indicated that the application of a complete bar allowed prosecution history estoppel to place "reasonable limits on the doctrine of equivalents, and further insulate[ ] the doctrine from any feared conflict with the Patent Act." *Id.* The application of a complete bar to the doctrine of equivalents whenever a claim amendment gives rise to prosecution history estoppel similarly reduces the conflict and tension between the patent protection afforded by the doctrine of equivalents and the public's ability to ascertain the scope of a patent.

D. Question 4

> When "no explanation [for a claim amendment] is established," *Warner-Jenkinson*, 520 U.S. at 33, 117 S. Ct. 1040, thus invoking the presumption of prosecution history estoppel under *Warner-Jenkinson*, what range of equivalents, if any, is available under the doctrine of equivalents for the claim element so amended?

We answer Question 4 as follows: When no explanation for a claim amendment is established, no range of equivalents is available for the claim element so amended.

This question is answered by *Warner-Jenkinson*:

> Where no explanation is established, ... prosecution history estoppel would *bar the application of the doctrine [of] equivalents* as to that element.

Warner-Jenkinson, 520 U.S. at 33 (emphasis added). In answering this question, we affirm what we stated in *Sextant*, 172 F.3d at 832, 49 U.S.P.Q.2d at 1875: when "the *Warner-Jenkinson* presumption is applicable, . . . the prosecution history estoppel arising therefrom is total and completely 'bars' the application of the doctrine of equivalents as to the amended limitation."

E. Question 5

> Would a judgment of infringement in this case violate *Warner-Jenkinson*'s requirement that the application of the doctrine of equivalents "is not allowed such broad play as to eliminate [an] element in its entirety," 520 U.S. at 29. In other words, would such a judgment of infringement, post *Warner-Jenkinson*, violate the "all elements" rule?

We do not need to reach this question for reasons which will become clear in our discussion of the specific case before us. Accordingly, we leave for another day any discussion of the "all elements" rule.

IV. Infringement of Festo's Patents

Festo is the owner by assignment of the Stoll patent and the Carroll patent, both of which are directed to magnetically coupled rodless cylinders. Festo sued SMC in the United States District Court for the District of Massachusetts, alleging infringement of the patents. The jury found that SMC infringed the Stoll patent under the doctrine of equivalents and assessed damages accordingly. *Festo Corp. v. Shoketsu Kinzoku Kogyo Kabushiki Co.*, No. 88- 1814-PBS, slip op. at 2-3 (D. Mass. Oct. 27, 1994) (Judgment) ("*Festo I (Judgment)*"). The district court previously had granted Festo's motion for summary judgment that certain models of SMC's rodless cylinders infringed the Carroll patent, also under the doctrine of equivalents. *Festo Corp. v. Shoketsu Kinzoku Kogyo Kabushiki Co.*, No. 88-1814-PBS, slip op. at 14-15 (D.Mass. July 11, 1994) (Order) ("*Festo I (Order)*").[3]

---

[3] On the first appeal to this court, the panel affirmed the judgment of infringement under the doctrine of equivalents of both the Stoll and Carroll patents. *Festo Corp. v. Shoketsu Kinzoku Kogyo Kabushiki Co.*, 72 F.3d 857, 37 U.S.P.Q.2d 1161 (Fed. Cir. 1995) ("*Festo II*"). After that decision, the Supreme Court decided *Warner-Jenkinson*. SMC had petitioned the Court for a writ of certiorari, which the Court granted, vacating the judgment and remanding the case to this court for further consideration in light of *Warner-Jenkinson* (a sequence of events called a "GVR"). *Festo III*, 520 U.S. at 1111. On remand, a panel of this court again affirmed the district court's judgment of infringement under the doctrine of equivalents. *Festo Corp. v. Shoketsu Kinzoku Kogyo Kabushiki Co.*, 172 F.3d 1361, 50 U.S.P.Q.2d 1385 (Fed. Cir. 1999) ("*Festo IV*"). SMC then petitioned for rehearing en banc, which we granted. *Festo V*, 187 F.3d at 1381, 51 U.S.P.Q.2d at 1959.

A. The Patents and Technology at Issue

Both the Stoll patent and the Carroll patent disclose magnetic rodless cylinders. The claimed devices are composed of three basic parts: a piston, a cylinder, and a sleeve. In basic terms, the piston is on the inside of the cylinder, and is moved by fluid under pressure. The sleeve is on the outside of the cylinder, and is magnetically coupled to the piston. The magnetic attraction between the sleeve and the piston causes the sleeve to follow the piston when it moves along the inside of the cylinder. The sleeve is used to move objects on a conveying system.

1. The application for the Stoll patent was filed on May 28, 1980; the patent issued on October 12, 1982. The following figure, the only drawing in the patent, shows the sleeve (18), the cylinder (10), and the piston (16) of the Stoll device:

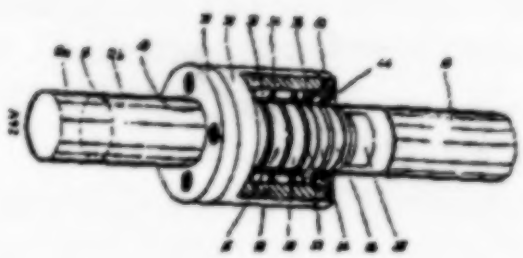

Inside the cylinder, the piston is driven by a pressurized fluid. Stoll patent, col. 3, ll. 13-19. As the piston travels through the cylinder, the magnetically coupled sleeve follows the piston along the outside of the cylinder. *Id.*

The piston includes magnets (20) and two "elastomeric sealing rings" (26). *Id.* at col. 3, ll. 20-32. The sealing rings prevent any impurities from getting on the piston. *Id.* at col. 3, ll. 48-55. There also are a pair of "guide rings" (24) on the piston. *Id.* at col. 3, ll. 26-30. As the patent explains, the guide rings, which project beyond the piston's surface, "pass along

the internal [cylinder] surface in a sliding fit," *id.* at col. 3, ll. 29-30, and help prevent impurities from dirtying the piston, *id.* at col. 3, ll. 51-55.

The sleeve of the Stoll patent device is made of multiple parts that include magnets (32) and an outer body made of a magnetizable material (30). *Id.* at col. 3, ll. 60-65. According to the patent, the magnetizable material on the sleeve that encircles the sleeve's magnets allows "magnetic leakage fields in the vicinity of the driven assembly to be kept to a minimum," preventing any unwanted braking forces. *Id.* at col. 2, ll. 24-35.

Claim 1 of the Stoll patent is representative of the claims asserted by Festo, and is the only claim of the Stoll patent at issue on appeal:

> 1. In an arrangement having a hollow cylindrical tube and driving and driven members movable thereon for conveying articles, the improvement comprising
>
> wherein said tube is made of a nonmagnetic material,
>
> wherein said driving member is a piston movably mounted on the inside of said tube, said piston having a piston body and plural axially spaced, first permanent annular magnets encircling said piston body,
>
> said piston further including first means spacing said first permanent magnets in said axial spaced relation, the radially peripheral surface of said magnets being oriented close to the internal wall surface of said tube,
>
> said piston further including plural guide ring means encircling said piston body and slidingly engaging said internal wall and

> first sealing rings located axially outside said guide rings for wiping said internal wall as said piston moves along said tube to thereby cause any impurities that may be present in said tube to be pushed along said tube so that said first annular magnets will be free of interference from said impurities,
>
> wherein said driven member includes a cylindrical sleeve made of a magnetizable material and encircles said tube,
>
> said sleeve having plural axially spaced second permanent annular magnets affixed thereto and in magnetically attracting relation to said first permanent annular magnets,
>
> and second means spacing said second permanent annular magnets in said axially spaced relation, the radially inner surface of said magnets being oriented close to the external surface of said tube,
>
> said sleeve having end face means with second sealing rings located axially outside said second permanent annular magnets for wiping the external wall surface of said tube as said driven member is moved along said tube in response to a driving movement of said piston to thereby cause any impurities that may be present on said tube to be pushed along said tube so that said second permanent annular magnets will be free of interference from said impurities.

Stoll patent, col. 5, l. 23-col. 6, l. 18 (paragraphing added).

2. The application for the Carroll patent was filed on February 17, 1972; the patent issued on December 18, 1973. A reexamination certificate was issued on October 25, 1988, with

amended claims. The Carroll patent is directed to the same technology as the Stoll patent. An exterior view of the Carroll patent device is shown in Figure 1 of the Carroll patent, reproduced below:

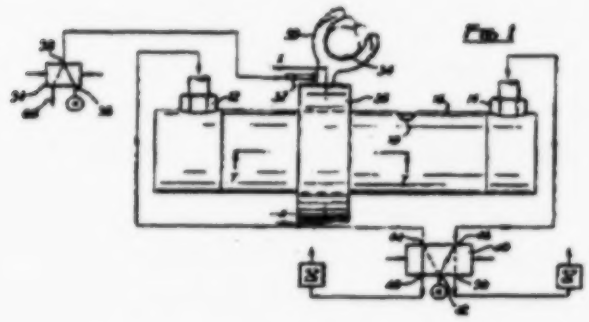

In the disclosed embodiment, the sleeve (28) is described as a permanent magnet that is attached to a gripping device (30) and that surrounds part of the exterior of the cylinder (10). Carroll patent, col. 2, ll. 17-26. As in the device of the Stoll patent, the sleeve of the Carroll patent moves along the cylinder in response to a magnetic piston which moves inside the cylinder. *Id.* Each end of the piston has a sealing ring set in an annular groove. *Id.* at col. 2, ll. 1-16. According to the patent, the sealing rings "engage the inner wall of the cylinder and form a fluid tight seal" that allows compressed air, or any other pressurized fluid, injected into port (12) or (14) on the outside of the cylinder to move the piston in either direction. *Id.* at col. 2, ll. 10-16, 42-59. The polarization of the magnets on the piston and the sleeve causes the sleeve, which is located on the outside of the cylinder, to follow the movement of the piston, which is located on the inside of the cylinder. *Id.* at col. 2, ll. 17-24.

Claim 9 of the reexamined Carroll patent is representative of the claims asserted by Festo:

9. A device for moving articles, which comprises:

a hollow cylinder formed of non-ferrous material and having opposite axial ends;

a piston mounted in the interior of the hollow cylinder and reciprocatingly slidable therein, the piston including a central mounting member disposed axially in the cylinder,

a plurality of cylindrically-shaped permanent magnets mounted on the central mounting member and spaced apart axially from each other, each magnet having a bore formed axially there-through for receiving the central mounting member,

at least one pair of end members mounted on the central mounting member and disposed on opposite axial sides of the plurality of magnets, a pair of cushion members formed of resilient material, the cushion members being situated near opposite axial ends of the central mounting member to help prevent damage to the piston when the piston contacts an axial end of the cylinder,

and a pair of resilient sealing rings situated near opposite axial ends of the central mounting member and engaging the cylinder to effect a fluid-tight seal therewith;

a body mounted on the exterior of the hollow cylinder and reciprocatingly slidable thereon,

the body including a plurality of annularly shaped permanent magnets surrounding the cylinder and spaced apart from each other, the permanent magnets of the piston and body being polarized so as to magnetically couple the body to the piston

whereby movement of the piston inside the cylinder causes a corresponding movement of the body outside the cylinder,

the body further including means provided thereon for holding on the body an article to be moved; and

means for controlling the admission of pressure fluid into the cylinder and exhaust fluid from the cylinder for moving the piston in the cylinder,

the attractive forces between the permanent magnets of the piston and the body being such that movement of the piston causes corresponding movement of the body below a predetermined load on the body and such that above said predetermined load movement of the piston does not cause corresponding movement of the body.

Reexamined Carroll patent, col.1, l. 34–col. 2, l. 37 (additional paragraphing added).

3. The SMC devices that were found to infringe the Stoll and Carroll patents under the doctrine of equivalents have two notable differences from the structures claimed in the patents. First, the SMC devices, although having pistons with two hard plastic guide rings, have only a single resilient two-way sealing ring, located on one end of the pistons. Thus, while the patents disclose and claim devices with a pair of sealing rings, the SMC devices have only single two-way sealing rings.[4] Second, the outer portion of the sleeves of SMC's devices is made of an aluminum alloy, a material that the parties agree is not a

[4] A sealing ring has a lip on only one side of the ring that seals against fluid flow on that side. By contrast, a two-way sealing ring has a lip on both sides of the ring that allows each side to seal against fluid flow.

magnetizable material. Thus, while the Stoll patent discloses and claims a sleeve made of a magnetizable material, the SMC devices have sleeves that are not made of a magnetizable material.

B. Prosecution History of the Patents at Issue

1. The Stoll patent application was filed in the United States as the U.S. counterpart of a German patent application. As filed, claim 1 of the Stoll patent initially read:

1. A linear motor for use in a conveying system,

said motor being operable by a pressure medium and comprising a tubular part connectible to a source of the pressure medium,

a piston which is slidable in said tubular part and which has sealing means at each end for [w]iping engagement with an internal surface of the tubular part and so as to form a seal for the pressure medium,

and a driven assembly which is slidable on the tubular part and which has means at each end for [w]iping engagement with an external surface of the tubular part,

the piston and the driven assembly each carrying a drive magnet arrangement in the form of a hollow cylindrical assembly,

each magnet arrangement having radial play relative to the adjacent surface of the tubular part,

and surfaces of the magnet arrangements which face the tubular part being closely adjacent to the respective surfaces of the tubular part.

The original application also included two dependent claims of relevance, claims 4 and 8:

4. A linear motor according to any of claims 1 to 3, wherein the sealing means of the piston *comprise sealing rings* and the piston is provided with sliding guide rings near the sealing rings.

8. A linear motor according to any of the preceding claims wherein the driven assembly is provided with a *sleeve made of a magnetisable material*, which encircles the hollow cylindrical assembly of the magnet arrangement. (Emphasis added.)

In the first Office Action, the patent examiner rejected all twelve original claims, and cited three patents as references "believed pertinent." Claims 1-12 were rejected under 35 U.S.C. § 112, ¶ 1, because the "exact method of operation is unclear. Is [the] device a true motor or magnetic clutch?" In addition, claims 4-12 were rejected under 35 U.S.C. § 112, ¶ 2, because they were "improperly multiply dependent."

In response, Stoll amended some claims, including claim 1, and canceled others, including claims 4 and 8. Claim 1 was amended to recite "plural guide ring means . . . and first sealing rings located axially outside said guide rings" on the piston and to recite "a cylindrical sleeve made of a magnetizable material." In the remarks accompanying the amendments, Stoll stated that "[e]ach of the claims now present in this application has been reviewed for compliance with the provisions of Title 35 U.S.C. § 112. Accordingly, further consideration of these claims, particularly with respect to the provisions of Title 35 U.S.C. § 112, is respectfully solicited."

When Stoll submitted this amendment, he also made two German patents of record in the application, No. 27,37,924 and No.19,82,379. Stoll had received these patents in the first office action in the corresponding German application. Stoll argued in the remarks accompanying the amendment that the "claims now present in th[e] application" are distinguishable over these references. Stoll stated that "i[t] is clear that neither of these two references discloses the use of structure preventing the interference by impurities located inside the tube and on the

outside of the tube while the arrangement is moved along the tube."

After considering this response, the examiner allowed the amended claims, requesting that all references to "linear motors" be deleted from the specification, because this phrase "connotes a different device having different operational characteristics."

2. The relevant portion of the Carroll patent's prosecution history is its reexamination. Before reexamination, claim 1 of the Carroll patent read as follows:

1. A device for moving articles comprising

a cylinder of non-ferrous material,

a piston including a permanent magnet having a pole-piece on each axial side thereof,

a body disposed outside and adjacent to said cylinder, said body including a permanent magnet which substantially surrounds the cylinder, there being a pole piece on each axial side of the permanent magnet included in said body, and

means for controlling the admission of pressure fluid into the cylinder and exhaust of fluid from the cylinder for moving the piston in the cylinder,

the attractive forces between the permanent magnets being such that movement of the piston causes corresponding movement of the body below a predetermined load on the body and such that above said predetermined load movement of the piston does not cause corresponding movement of the body.

Original Carroll patent, col. 4, ll. 4-19 (paragraphing added). This claim did not recite the sealing rings disclosed in the specification.

Carroll requested reexamination on March 18, 1988, citing German Patent No. 1,982,379, which was not of record in the Carroll patent's prosecution history. In his request for reexamination, Carroll asserted that the German patent presented a substantial new question of patentability because the Patent Office "may find the German patent, in combination with the other references which were cited during prosecution of the Carroll patent[,] . . . to disclose several of the primary structural features of the device defined by Claim 1."

The German patent described rodless cylinders having several of the features of the device described in the Carroll patent, including a pair of sealing rings. The Patent Office granted Carroll's request for reexamination, finding that the German patent "discloses an article transport device which is movable in response to a hydraulically operated magnetic piston, which is a feature that was not found by the Examiner during the prosecution" of the Carroll patent.

During reexamination, Carroll canceled claim 1 and added claim 9, which explicitly recites "a pair of resilient sealing rings situated near opposite axial ends of the central mounting member and engaging the cylinder to effect a fluid-tight seal therewith." In the remarks accompanying the amendment, Carroll argued that the now-amended claims[5] "more clearly and more specifically" define the "features of the patentee's invention that distinguish over the art of record, including" the German patent cited in the request for reexamination. Carroll also noted that the structure now described in claim 9 was not disclosed in the art of record. Carroll further stated that "the particular structure of the inner piston and outer body now specifically set forth in new claim 9 is not taught or suggested

[5] Carroll also amended claims 3 and 5 to depend from claim 9.

by the German patent," particularly noting the recitation of the placement and plurality of magnets for both the piston and outer body and the recitation of resilient materials and cushion materials on the ends of the piston.

The examiner allowed the amended claims, stating that "the prior art does not teach or render obvious the claimed combination which includes the plurality of magnets, end members, and cushion members in the claimed relationship."

C. The District Court Proceedings

Festo sued SMC in the district court for infringement of both the Stoll and Carroll patents. Festo's claims of infringement and damages and SMC's counterclaims of invalidity were referred to a special master for consideration. The special master determined that both the Stoll and Carroll patents were not invalid. *Festo Corp. v. Shoketsu Kinzoku Kogyo Kabushiki Co.*, No. 88-1814-MA, slip op. at 42, 19 (D. Mass. Spec. Master Apr. 27, 1993) (Report). The special master also determined that the SMC devices at issue in this appeal did not infringe the Stoll patent, *id.* at 42, 47, but did infringe claims 5, 6, and 9 of the Carroll patent under the doctrine of equivalents, *id.* at 25.

In due course, the district court entertained summary judgment motions from both parties on the issues of infringement and validity. *Festo I (Order)*, slip op. at 1-3. The district court denied all summary judgment motions except Festo's motion for summary judgment of infringement of the Carroll patent. *Id.* at 2. In ruling on the motions, the district court determined that SMC could not literally infringe the Stoll patent because SMC's devices did not have magnetizable sleeves. *Id.* at 6. The court also determined that there was a genuine issue of material fact regarding infringement under the doctrine of equivalents. *Id.* at 11. The court addressed SMC's assertion that prosecution history estoppel barred the application of the doctrine of equivalents to the Stoll patent because the magnetizable sleeve element was not initially

recited in claim 1, but was added to the claim after the first Office Action. *Id.* at 9-10. The court concluded that the reason for the magnetizable sleeve amendment was "a mystery," because it did not appear to be related to any of the examiner's 35 U.S.C. § 112 rejections, and it did not appear to distinguish the invention over the prior art. *Id.* at 10. The district court therefore declined to hold that prosecution history estoppel barred a finding that the Stoll patent was infringed under the doctrine of equivalents. *Id.* at 11.

Turning to the Carroll patent, the court noted that the only argument of noninfringement that SMC made was that the single sealing ring in its piston was not equivalent to the pair of sealing rings recited in claim 9 of the Carroll patent. *Id.* at 14. However, Festo had presented expert testimony that SMC's single seal was equivalent to the two seals recited in the claims. *Id.* at 14. To rebut this testimony, SMC cited a statement Stoll had made during prosecution of the Stoll patent to the effect that two sealing rings are necessary to prevent dirt on the piston's magnet. *Id.* at 14-15. The district court found that the statement made during prosecution of the Stoll patent did not bear on the "meaning and function of the sealing rings as described" in the Carroll patent. *Id.* at 14-15. The court therefore granted Festo's motion for summary judgment of infringement of claims 5, 6, and 9 of the Carroll patent under the doctrine of equivalents. *Id.* at 16.

The remaining issues, infringement under the doctrine of equivalents of the Stoll patent, and validity of the Carroll and Stoll patents, were tried to a jury. *Festo I (Judgment)*, slip op. at 1. The jury rendered a verdict on July 14, 1994, concluding that both patents were not invalid and finding that claim 1 of the Stoll patent was infringed under the doctrine of equivalents. *Id.* at 2-3. The special verdict form indicates that the jury found that Festo had proven by a preponderance of the evidence that SMC's non-magnetizable sleeve and single sealing ring performed substantially the same function in substantially the same way to obtain substantially the same result as the claimed

magnetizable sleeve and pair of sealing rings. *Festo Corp. v. Shoketsu Kinzoku Kogyo Kabushiki Co.*, No. 88-1814-PBS (D.Mass. July 14, 1994) (Special Verdict Form) ("*Festo I (Special Verdict Form)*").

D. SMC's Appeal

SMC appeals the judgment of infringement of the Stoll patent, which was entered pursuant to the jury's verdict that the patent was infringed under the doctrine of equivalents. Infringement under the doctrine of equivalents is a question of fact. *Warner-Jenkinson*, 520 U.S. at 38. We must overturn the jury's finding on a factual issue if it is not supported by substantial evidence or if it is based on an erroneous legal determination. *Kearns v. Chrysler Corp.*, 32 F.3d 1541, 1547-48, 31 U.S.P.Q.2d 1746, 1751 (Fed. Cir. 1994). Prosecution history estoppel is a legal question that is subject to de novo review by this court. *LaBounty*, 867 F.2d at 1576, 9 U.S.P.Q.2d at 1998. Thus, when reviewing the jury verdict, we will independently decide the legal question of the application of prosecution history estoppel to the Stoll patent.

SMC also appeals the district court's judgment of infringement of the Carroll patent, which was entered in accordance with the court's grant of Festo's motion for summary judgment that claims 5, 6 and 9 were infringed under the doctrine of equivalents. Summary judgment "shall be rendered forthwith if the pleadings, depositions, answers to interrogatories, and admissions on file, together with the affidavits, if any, show that there is no genuine issue as to any material fact and that the moving party is entitled to a judgment as a matter of law." Fed. R. Civ. P. 56(c); *Vivid Techs., Inc. v. American Science & Eng'g, Inc.*, 200 F.3d 795, 806-07, 53 U.S.P.Q.2d 1289, 1297 (Fed. Cir. 1999). We review the grant of a motion for summary judgment without deference, *Conroy v. Reebok, Int'l, Ltd.*, 14 F.3d 1570, 1575, 29 U.S.P.Q.2d 1373, 1377 (Fed. Cir. 1994), drawing all reasonable factual inferences in favor of the non-moving party, *Anderson v. Liberty Lobby, Inc.*, 477 U.S. 242, 255 (1986); *Semiconductor Energy Lab.*

Co. v. Samsung Elecs. Co., 204 F.3d 1368, 1378, 54 U.S.P.Q.2d 1001, 1008 (Fed. Cir. 2000).

1. When infringement is alleged to occur under the doctrine of equivalents, two primary legal limitations on the doctrine "are to be determined by the court, either on a dispositive pretrial motion or on a motion for judgment as a matter of law at the close of evidence and after the jury verdict." *Warner-Jenkinson*, 520 U.S. at 39 n. 8. Those legal limitations are prosecution history estoppel and the "all elements" rule. *Id.*

The first legal limitation a court should consider is prosecution history estoppel, because prosecution history estoppel may completely bar the application of the doctrine of equivalents to a given claim element. The first step in a prosecution history estoppel analysis is to determine which claim elements are alleged to be met by equivalents. Then, the court must determine whether the elements at issue were amended during prosecution of the patent. If they were not, amendment-based estoppel will not bar the application of the doctrine of equivalents. However, the court still may need to consider whether statements made during prosecution give rise to argument-based estoppel. *See e.g.*, *Pharmacia & Upjohn*, 170 F.3d at 1377, 50 U.S.P.Q.2d at 1036.

If the claim elements at issue were amended, the court first must determine whether the amendment narrowed the literal scope of the claim. If so, prosecution history estoppel will apply unless the patent holder establishes that the amendment was made for a purpose unrelated to patentability. *Warner-Jenkinson*, 520 U.S. at 40-41. If the patent holder fails to do so, prosecution history estoppel will bar the application of the doctrine of equivalents to that claim element.

In *Warner-Jenkinson*, the Supreme Court explained the purpose of placing on the patent holder the burden of establishing the reason for an amendment: allocating the burden in this manner "gives proper deference to the role of claims in defining an invention and providing public notice." *Id.* at 33.

Public notice considerations also have been fundamental to our decisions regarding the scope of prosecution history estoppel. *E.g.*, *Pharmacia & Upjohn*, 170 F.3d at 1377, 50 U.S.P.Q.2d at 1036 ("To determine what subject matter has been relinquished, an objective test is applied, inquiring whether a competitor would reasonably believe that the applicant had surrendered the relevant subject matter." (citation and quotations omitted)). In order to give due deference to public notice considerations under the *Warner-Jenkinson* framework, a patent holder seeking to establish the reason for an amendment must base his arguments solely upon the public record of the patent's prosecution, i.e., the patent's prosecution history. To hold otherwise—that is, to allow a patent holder to rely on evidence not in the public record to establish a reason for an amendment—would undermine the public notice function of the patent record. If the reasons for the amendment do not appear in the public record of the patent's prosecution, the reasons in most cases will be known only to the patent holder. We therefore hold that a narrowing amendment will give rise to prosecution history estoppel unless the prosecution history of the patent reveals that the amendment was made for a purpose unrelated to patentability concerns.[6]

---

[6] In her dissenting opinion, Judge Newman expresses the concern that we are penalizing the patent holder by limiting the evidence upon which he can rely to establish that a narrowing amendment was made for a purpose unrelated to patentability to what is contained in the prosecution history record. In response, we wish to make it clear that, in determining the reason for an amendment, a court can properly consider any attorney argument regarding the reason for the amendment that is supported by the prosecution history record. Permitting patent holders to rely on evidence extrinsic to the prosecution history record would undermine the public notice function of the patent record. In *Warner-Jenkinson*, the Supreme Court required that a patent holder be provided an opportunity to "demonstrate[ ] that an amendment required during prosecution had a purpose unrelated to patentability." *Warner-Jenkinson*, 520 U.S. at 40-41. The Court, however, did not discuss the evidence that patent holders can use in that regard. Thus, restricting the evidence to the prosecution history record does not run

(continued...)

If prosecution history estoppel does not bar the application of the doctrine of equivalents, the court should consider the second legal limitation on the doctrine, the "all elements" rule, *see, e.g., Pennwalt Corp. v. Durand-Wayland, Inc.*, 833 F.2d 931, 4 U.S.P.Q.2d 1737 (Fed. Cir. 1987) (en banc) (holding that there can be no infringement under the doctrine of equivalents if even one element of a claim or its equivalent is not present in the accused device). If the court determines that a finding of infringement under the doctrine of equivalents "would entirely vitiate a particular claim element," then the court should rule that there is no infringement under the doctrine of equivalents. *Warner-Jenkinson*, 520 U.S. at 39 n. 8.

2. The jury found that claim 1 of the Stoll patent was infringed under the doctrine of equivalents. *Festo I (Special Verdict Form)*. The two elements found to be infringed by equivalents were the "cylindrical sleeve made of a magnetizable material," and the "first sealing rings located axially outside . . . [the] guide rings." *Id.* Both of these elements were added during prosecution of the patent. Following the methodology outlined above, we conclude that prosecution history estoppel bars the application of the doctrine of equivalents to these claim elements. In view of this determination, we do not reach the "all elements" rule.

We begin our analysis with the magnetizable sleeve element. SMC argues that this claim element is not entitled to any range of equivalents. SMC contends that Festo has not demonstrated that the amendment was made for a reason unrelated to patentability and that, therefore, the presumption of *Warner-Jenkinson* applies and the doctrine of equivalents is barred. SMC asserts that the voluntary nature of the amendment is irrelevant to the prosecution history estoppel inquiry because *Warner-Jenkinson* places the burden on a

---

[6] (...continued)
counter to *Warner-Jenkinson*.

patent holder to establish the reason for an amendment, regardless of whether the amendment was required or voluntary. SMC argues that Festo disclaimed non-magnetizable sleeves when it amended the claim to recite a magnetizable sleeve. SMC also argues that the public, including competitors like itself, would reasonably understand from the prosecution history of the patent that Festo had surrendered any device with a non-magnetizable sleeve.

Festo responds that the *Warner-Jenkinson* presumption does not apply to voluntary amendments. Festo emphasizes that the magnetizable sleeve amendment was not made in response to any prior art rejection and was not needed to overcome the 35 U.S.C. § 112 rejections of the original claims. Accordingly, Festo argues, prosecution history does not bar the application of the doctrine of equivalents to this claim element.

To determine whether a claim amendment gives rise to prosecution history estoppel, we first must determine whether the amendment narrowed the literal scope of the claim. Here we are presented with the situation where the added claim element was introduced through a new claim, instead of through an amendment to an original claim. Nevertheless, the addition of the magnetizable sleeve claim element can be said to have narrowed the scope of the original claim because the new claim replaced the original claim. Specifically, the only original independent claim, which did not recite a magnetizable sleeve, was replaced with an independent claim which does recite a magnetizable sleeve. Because the amendment narrowed the literal scope of the claim, we must determine whether Festo has established that it was made for a reason unrelated to patentability.

We agree with SMC that the reason for the amendment adding the magnetizable sleeve element is not evident from the prosecution history. Original claim 1 did not recite a magnetizable sleeve, although this feature of the invention was recited in original dependent claim 8. In response to the first Office Action, Festo replaced original claim 1 with a claim

reciting a magnetizable sleeve and canceled claim 8. Although the amendment was submitted in the response to the first Office Action, the amendment itself was not responsive to any of the rejections set forth in the Office Action. As discussed above, the Office Action rejected all of the claims under 35 U.S.C. § 112, ¶ 1 because it was not clear to the examiner whether the claimed device was a true motor or a magnetic clutch; in addition, the Office Action rejected claims 4-12 under 35 U.S.C. § 112, ¶ 2 for being improperly multiply dependent. The amendment adding the magnetizable sleeve element did not address either of these rejections. Moreover, there is no statement in the prosecution history that explains why this element was included in the independent claim.

In its Supplemental Brief On Remand from the Supreme Court, Festo argued that the amendment was made to clarify the claim. Specifically, Festo asserted that the "'hollow cylindrical assembly'" recited in original claim 1 was "rewritten more clearly as 'a cylindrical sleeve made of a magnetizable material.'" Appellee's Supplemental Brief On Remand from the United States Supreme Court, at 7. This assertion is inadequate to escape the *Warner- Jenkinson* presumption, however, because nothing in the prosecution history of the Stoll patent indicates that the magnetizable sleeve element was merely added for purposes of clarification unrelated to patentability concerns.

On remand, Festo also argued that the voluntary nature of the amendment that added the magnetizable sleeve claim element prevents the amendment from giving rise to prosecution history estoppel. Our answer to En Banc Question 2, which holds that voluntary amendments are treated the same as other amendments, compels us to reject this argument. Festo has thus failed to meet its burden under *Warner-Jenkinson* of establishing a reason unrelated to patentability for the amendment that added the magnetizable sleeve element. The amendment therefore gave rise to prosecution history estoppel. *See Warner-Jenkinson*, 520 U.S. at 40-41. Because prosecution

history estoppel acts as a complete bar to the doctrine of equivalents, application of the doctrine of equivalents is barred as to this claim element.

We turn now to the sealing ring element. SMC argues that the sealing ring claim element was added to distinguish the prior art and, therefore, is not entitled to any range of equivalents. SMC asserts that arguments accompanying the amendment make clear that the amendment was made to distinguish the prior art. SMC contends that a competitor such as itself reasonably would conclude from the prosecution history that Festo surrendered the difference between the originally claimed sealing means and the sealing rings recited in the amended claims. By the same token, SMC argues, Festo disclaimed the difference between the original and amended claims.

Festo's principal argument is that there is no substantial difference between original claim 1 and the amended claim with respect to the sealing ring element. Specifically, Festo argues that the original claim recited the sealing ring element in means-plus-function language, whereas the amended claim recites the structure described in the specification as performing the recited function ("the corresponding structure"). Festo also argues that the claim amendment did not give rise to prosecution history estoppel because it was made to respond to the 35 U.S.C. § 112 rejection, not to avoid the prior art. Festo contends that the statements accompanying the amendment do not evidence a clear and unmistakable surrender of subject matter and, therefore, did not give rise to prosecution history estoppel.

The sealing ring element was added to claim 1 when the original independent claim 1 was replaced with the independent claim that issued as claim 1. This amendment narrowed the literal scope of the claim because it substituted an independent claim that recited a sealing ring element for an independent claim that did not recite such an element. Even if the amendment that added the sealing ring element merely replaced

the means-plus-function language with a recitation of the corresponding structure, the amendment had the effect of narrowing the scope of the claim. A claim element recited in means-plus-function language literally encompasses the corresponding structure and its equivalents. *Laitram Corp. v. Rexnord Inc.*, 939 F.2d 1533, 1536, 19 U.S.P.Q.2d 1367, 1370 (Fed. Cir. 1991). In contrast, a claim element that recites the corresponding structure does not literally encompass equivalents of that structure. *Id.* Thus, a claim amendment that replaces means-plus- function language with language reciting the corresponding structure narrows the literal scope of the claim.

We conclude that Festo has not established that the amendment that added the sealing ring element was made for a reason unrelated to patentability. Festo argues that the amendment was made to respond to the 35 U.S.C. § 112 rejection. Because a claim will not issue unless it satisfies the requirements of section 112, an amendment made to satisfy the statute is an amendment made for a reason related to patentability. *See supra* Answer to En Banc Question 1. The amendment also appears to have been made to distinguish the prior art. Submitted with the amendment was a statement to the effect that German Patent No. 27,37,924 and German Patent No. 19,82,379 "are obviously clearly distinguishable over the subject matter of the claims now present in th[e] application," i.e., the amended claims. Also submitted with the amendment was an assertion that "[i]t is clear that neither of these two references discloses the use of structure preventing the interference by impurities located inside the tube and on the outside of the tube while the arrangement is moved along the tube." In view of these statements, we conclude that the amendment adding the sealing ring element was made to distinguish the German patents and, therefore, was made for a reason related to patentability. *See Warner-Jenkinson*, 520 U.S. at 30-31 (noting that amendments made to avoid the prior art have been held to give rise to prosecution history estoppel).

Thus, Festo cannot establish that the amendment was made for a reason unrelated to patentability. The amendment therefore gave rise to prosecution history estoppel and, in accordance with our Answer to En Banc Question 3, no range of equivalents is available for the sealing ring element.

The jury's finding of infringement was based on an application of the doctrine of equivalents to the magnetizable sleeve and sealing ring claim elements; accordingly, we must reverse the judgment that claim 1 of the Stoll patent was infringed under the doctrine of equivalents.

3. The district court granted Festo's motion for summary judgment of infringement under the doctrine of equivalents with respect to independent claim 9 and dependent claims 5 and 6 of the Carroll patent. *Festo I (Order)*, slip op. at 15. The element in all three claims found to be infringed by equivalents is "a pair of resilient sealing rings situated near opposite axial ends of the central mounting member" (a "pair of sealing rings").[7] *Id.* at 14. This element was added to claim 9 during reexamination of the Carroll patent. Following the methodology outlined above, we conclude that prosecution history estoppel bars the application of the doctrine of equivalents to this element of the claims of the Carroll patent. In view of this determination, we do not reach the "all elements" rule.

SMC argues that Festo's purpose for this amendment is not clear.[8] SMC states that because Festo specifically canceled

---

[7] This element is expressly recited in claim 9 and is included in claims 5 and 6, which depend from claim 9 and which incorporate all of the limitations of that claim, see 35 U.S.C. § 112, ¶ 4 (1994); 37 C.F.R. §1.75(c) (1999).

[8] SMC did not argue prosecution history estoppel with respect to the Carroll patent before the district court. But upon a GVR from the Supreme Court, a court of appeals may "consider relevant decisions and arguments that were not previously before it" to promote fairness. *Stutson v. United*

(continued...)

original claim 1, which did not recite a sealing ring at each end of the piston, and added claim 9, which does recite a sealing ring at each end of the piston, the only reasonable conclusion is that the amendment was made for a purpose related to patentability. SMC further asserts that because claim 9 is a combination claim, its patentability hinges on the novelty of the recited combination, including the recited pair of sealing rings. SMC also argues that if the purpose for the amendment is unclear, the *Warner-Jenkinson* presumption applies, and application of the doctrine of equivalents is barred.

Festo responds by arguing that the amendment adding the pair of sealing rings element was not required, and thus was voluntary. Festo states that because the amendment was voluntary, it cannot give rise to prosecution history estoppel under *Warner-Jenkinson*. Festo also states that the amendment could not have been required to distinguish the German patent that prompted the reexamination, because the German patent discloses a piston with sealing rings. Festo argues that because the amendment was not made for a purpose related to patentability, the amendment did not create prosecution history estoppel.

To determine whether this claim amendment gave rise to prosecution history estoppel, we first must determine whether the amendment narrowed the literal scope of the claim. As with the elements of the Stoll patent discussed above, the claim element at issue in the Carroll patent was introduced through a new claim, instead of through the amendment of a pending claim. Specifically, during reexamination, independent claim 1, which did not recite a pair of sealing rings, was replaced by

---

[8] (...continued)
States, 516 U.S. 193, 197 (1996). Our consideration of prosecution history estoppel here is particularly appropriate, because *Warner-Jenkinson*, the case which the Supreme Court asked us to consider in this GVR, specifically addressed the role of prosecution history estoppel as a limitation on the doctrine of equivalents. *See Warner-Jenkinson*, 520 U.S. at 40.

independent claim 9, which does recite a pair of sealing rings. This amendment narrowed the literal scope of the claims of the Carroll patent.[9] Accordingly, we must consider the reasons for the amendment.

As discussed above, under *Warner-Jenkinson*, Festo bears the burden of establishing that the amendment was made for a reason unrelated to patentability. *Warner-Jenkinson*, 520 U.S. at 40-41. It has failed to do so. Festo admits that there is "[n]o specific mention of the sealing rings" in the prosecution history record. En Banc Responsive Brief of Plaintiff-Appellee Festo Corp., at 49. Moreover, in view of our answer to En Banc Question 2, the voluntary nature of the amendment is irrelevant to the inquiry.

The prosecution history of the Carroll patent reveals that the amendment that added the pair of sealing rings claim element was motivated by at least one reason related to patentability: a desire to avoid the prior art. In the remarks accompanying the amendment that introduced claim 9, which recites the pair of sealing rings, Carroll stated that the amendment defined the "features of the patentee's invention that distinguish over the art of record, including" the German patent cited in the request for reexamination. Thus, although the German patent disclosed a piston with sealing rings, Carroll did argue that the combination of features recited in the claims, which includes the pair of sealing rings, distinguished the claims over the German patent. Moreover, when the examiner allowed the reexamined claims, he stated that "the prior art does not teach or render obvious the claimed *combination* which includes the plurality of magnets, end members, and cushion members in the claimed relationship." (Emphasis added.) Although the examiner did not specifically reference the pair of sealing rings in his statement of reasons for allowance, his statement

---

[9] Because claims 5 and 6 are dependent claims, any amendment that narrows the scope of the claim from which they depend also narrows claims 5 and 6. *See supra* note 7.

emphasizes that it is the claimed combination of elements that was found to be patentable. In view of this prosecution history, Festo cannot establish that the amendment that added the pair of sealing rings element was made for a reason unrelated to patentability. Indeed, the prosecution history indicates that the amendment was made for a reason related to patentability. In accordance with our answer to En Banc Question 3, prosecution history estoppel bars application of the doctrine of equivalents to the pair of sealing rings element. Accordingly, we must reverse the judgment that claims 5, 6, and 9 of the Carroll patent were infringed under the doctrine of equivalents.

CONCLUSION

The claim elements of the Stoll and Carroll patents that were found to be infringed by equivalents were added to the pertinent claims during prosecution of the Stoll patent and during reexamination of the Carroll patent through amendments that narrowed the scope of the claims. As explained above, Festo has not established explanations for these amendments unrelated to patentability. The amendments therefore gave rise to prosecution history estoppel. Under these circumstances, the amended claim elements are entitled to no range of equivalents. Thus, they cannot be infringed by equivalents. The court's judgment of infringement under the doctrine of equivalents of both the Stoll and Carroll patent is therefore

REVERSED.

COSTS

Each party shall bear its own costs.

CONCURRING OPINION

PLAGER, Circuit Judge, concurring.

I concur in and join the opinion and judgment of the court. It is a second-best solution to an unsatisfactory situation. Under our preexisting law, a count for infringement under the

doctrine of equivalents became a routine part of a patent infringement suit. The game was to convince the trier of fact, typically a jury, that even if an accused product[10] does not infringe the claims as written, the claimed invention and the accused product have only "insubstantial differences," a wonderfully indeterminate phrase, lending itself to making every decision under the doctrine an individualistic choice, if not simply a flip of the coin. For the rationale behind the "insubstantial differences" rubric, *see Hilton Davis Chemical Co. v. Warner-Jenkinson Co.*, 62 F.3d 1512, 1516-18, 35 U.S.P.Q.2d 1641, 1644-45 (Fed. Cir. 1995), *rev'd and remanded*, 520 U.S. 17, 41 U.S. P.Q.2d 1865 (1997).

In an attempt to make the phrase "insubstantial differences" less indeterminate, we have continued to resort to the old "function-way-result" formulation, indicating that in appropriate cases—whatever that might mean— the answer could be found through those lenses. *See, e.g., Hill-Rom Co. v. Kinetic Concepts, Inc.*, 209 F.3d 1337, 1343, 54 U.S.P.Q.2d 1437, 1442 (Fed. Cir. 2000); *Kraft Foods, Inc. v. Int'l Trading Co.*, 203 F.3d 1362, 1371, 53 U.S.P.Q.2d 1814, 1820-21 (Fed. Cir. 2000); *Overhead Door Corp. v. Chamberlain Group, Inc.*, 194 F.3d 1261, 1270, 52 U.S.P.Q.2d 1321, 1327 (Fed. Cir. 1999); *Augustine Medical, Inc. v. Gaymar Indus., Inc.*, 181 F.3d 1291, 1304, 50 U.S.P.Q.2d 1900, 1909 (Fed. Cir. 1999); *Vehicular Tech. Corp. v. Titan Wheel Int'l, Inc.*, 141 F.3d 1084, 1089-90, 46 U.S.P.Q.2d 1257, 1261 (Fed. Cir. 1998); *Dawn Equip. Co. v. Kentucky Farms Inc.*, 140 F.3d 1009, 1015-16, 46 U.S.P.Q.2d 1109, 1113 (Fed. Cir. 1998). Though "function" and "result" are in many cases reasonably straightforward, the "way" of an accused product compared to that of the claimed invention has proved to be no more precise a criterion in its application than "insubstantial differences," for which it was supposed to be a useful surrogate. *See, e.g., Overhead Door*, 194 F.3d at 1270, 52 U.S.P.Q.2d at 1327.

---

[10] I use the broad term "product" to include any process, device, etc.

Worse yet, whether the trier of fact was judge or jury, the decision about infringement under the doctrine of equivalents does not end with the trial. Given the indeterminate nature of the test, it is not difficult for the losing party to make a plausible argument on appeal that there was "clear error" or that "no reasonable jury could have thought such a thing," as the case may be. Given the indeterminate nature of the test, this court has shown little reluctance to review these decisions. *See, e.g.*, *Hill-Rom*, 209 F.3d at 1343, 54 U.S.P.Q.2d at 1442; *Dawn Equip.*, 140 F.3d at 1015-17, 46 U.S.P.Q.2d at 1113-15. The net effect has been that all too often there is no way to know whether a particular product infringes under the doctrine until a panel of this court says so; the rule of analysis gives little real guidance, and equally little predictability.

In today's rulings the court attempts to limit some of the indeterminacy of the doctrine with a set of bright-line rules, trading off areas of uncertainty for a degree of rigidity. Unfortunately, this attempt at injecting certainty into the doctrine contains the potential for unintended consequences, consequences that may do nothing but exacerbate the problem.

What will be the response of the patent bar to the new rules? Past practice has been to claim broadly in the initial application for a patent, and then negotiate with the United States Patent and Trademark Office through one or more rejections until arriving at a mutually acceptable set of claims. Under the new rules of engagement, that process will create full prosecution history estoppel regarding every limitation that is amended for patentability purposes, a term now broadly defined.

Patent counsels may decide that past practice gives up too much under the new rules, and instead may start claiming narrowly with the hope of avoiding rejections and consequent amendments. Literal infringement will become harder to prove because claims will be drafted more narrowly and with greater specificity. That itself may be to the good, since much of current patent litigation involves claim construction issues

resulting from the vague, sometimes almost incomprehensible, manner in which claims have been drafted.

An unintended consequence, however, may be that patent litigation will lean ever more heavily on the doctrine of equivalents, especially in those cases in which the patent application, containing narrowly drawn claims, was approved without any amendment in the area that affects the accused product. The patentee may have little choice but to insist on enforcement under the doctrine of equivalents, if the patent is to be enforced at all. Since today's decision does not change the basic rule of analysis for infringement claims under the doctrine of equivalents, the outcome in those cases will continue to be tested under the pre-existing "insubstantial differences" and its surrogate "function-way-result," with all the game-playing those indeterminate phrases provide.

In time then, the supposed benefits of the doctrinal improvements contained in today's decision may prove illusory.

That is why I consider it a second-best solution. A better solution would be to declare the doctrine of equivalents—a judge-made rule in the first place— to have its roots firmly in equity, and to acknowledge that when and in what circumstances it applies is a question of equitable law, a question for which judges bear responsibility. We have admitted to these roots in a number of cases. *See Texas Instruments Inc. v. USITC*, 988 F.2d 1165, 1173, 26 U.S.P.Q.2d 1018, 1024 (Fed. Cir. 1993) ("the doctrine of equivalents has been 'judicially devised to do *equity*'" (quoting *Loctite Corp. v. Ultraseal, Ltd.*, 781 F.2d 861, 870, 228 U.S.P.Q. 90, 96 (Fed. Cir. 1985)) (emphasis added)); *Valmont Indus., Inc. v. Reinke Mfg. Co.*, 983 F.2d 1039, 1043 n. 1, 25 U.S.P.Q.2d 1451, 1454 n. 1 (Fed. Cir. 1993) ("the doctrine 'is designed to do *equity*'" (quoting *Perkin-Elmer Corp. v. Westinghouse Elec. Corp.*, 822 F.2d 1528, 1532, 3 U.S.P.Q.2d 1321, 1324 (Fed. Cir. 1987)) (emphasis added)); *Charles Greiner & Co. v. Mari-Med Mfg., Inc.*, 962 F.2d 1031, 1036, 22

U.S.P.Q.2d 1526, 1529 (Fed. Cir. 1992) ("careful confinement of the doctrine of equivalents to its proper *equitable* role . . . promotes certainty and clarity in determining the scope of patent rights" (emphasis added)); *London v. Carson Pirie Scott & Co.*, 946 F.2d 1534, 1538, 20 U.S.P.Q.2d 1456, 1458 (Fed. Cir. 1991) ("this *equitable doctrine* evolved from a balancing of competing policies" (emphasis added)).

Were this court to openly acknowledge that the doctrine of equivalents can only be legitimated by its equitable roots and should be treated as an equitable doctrine, important consequences would flow. Trial courts, sitting as courts of equity, would be responsible for deciding whether the doctrine of equivalents should be applied, not unlike the practice regarding the doctrine of inequitable conduct. On appeal to this court, we would review a trial court's determination under the deferential standard of abuse of discretion.

The test the trial courts would apply would be crafted to blend both objective and subjective factors. The differences between the claimed invention and the accused product would necessarily remain of relevance; and in addition, traditional equitable considerations would focus on matters such as the conduct of the accused product's sponsors, specifically, the considerations pronounced in the Supreme Court's seminal opinion in *Graver Tank & Manufacturing Co. v. Linde Air Products Co.*, 339 U.S. 605, 607-08, 85 U.S.P.Q. 328, 330 (1961):

> [C]ourts have also recognized that to permit imitation of a patented invention which does not copy every literal detail would be to convert the protection of the patent grant into a hollow and useless thing. Such a limitation would leave room for—indeed encourage—the unscrupulous copyist to make unimportant and insubstantial changes and substitutions in the patent which, though adding nothing, would be enough to take the copied matter outside the claim, and hence outside the reach of law . . ..
>
> . . . The essence of the doctrine [of equivalents] is that one may not practice a fraud on a patent. Originating almost a century ago in the case of *Winans v. Denmead*, 15 How. 330, 14 L. Ed. 717, it has been consistently applied by this Court and the lower federal courts, and continues today ready and available for utilization when the proper circumstances for its application arise.

It is true that "fraud" and "unscrupulous" conduct are not terms of precision, yet they are terms with which judges are familiar. More importantly, they point to the underlying reason for the doctrine; as the Court said, the essence of the doctrine is fraud. Notions of fairness and equity are concerns which over the centuries have permitted courts to reach beyond the fixed scope of legal rights in "proper circumstances," to use the Court's phrase. What those circumstances are in regard to patent rights this court over time could determine, and in time develop a refined body of law that emphasizes the exceptional nature of relief under the doctrine. In time, there would be a set of known factors that could be applied predictably, thus giving a degree of decisional certainty to the doctrine, all the while retaining flexibility in the process to deal with new situations—the hallmark of equitable adjudication.

By contrast, the notion of "insubstantial differences" between a particular claim and a particular product, viewed as the governing principle, can never be anything other than an ad hoc judgment, dependent on the eye of the beholder in the individual case. Though we talk about considering factors such as the role of copying, interchangeability of elements, and so on, the reality is that, as our cases since *Hilton Davis* demonstrate, the decision on equivalents remains essentially a subjective call, with repetition of verbal formulae but without

transferability from case to case of practical guidance. This to me is the antithesis of the rule of law.

I have previously written at length on this problem and on my suggested approach to its management, *see Hilton Davis*, 62 F.3d at 1536, 35 U.S.P.Q.2d at 1661 (Plager, J., dissenting, joined by Archer, C.J., and Rich and Lourie, JJ.), and will not repeat all that was said there. In this court's earlier attempt to address the difficulties in our equivalents doctrine, *see Hilton Davis*, 62 F.3d 1512, 35 U.S.P.Q.2d 1641, *passim*, the court majority elevated the notion of insubstantial differences to the controlling criterion, on the expressed belief that it had some abstract objectivity. Experience has now shown that belief to have been more hope than reality. In focusing on the mechanistic idea of insubstantial differences, the court failed to grapple with the basic problem of uncertainty in the law. Thus, five short years later, we are again grappling with the problem. This is a self-inflicted wound.

It would be easy now to blame the Supreme Court for the mess we are in, since the Court, in response to our *Hilton Davis* decision, has opined on the matter. *See Warner-Jenkinson Co. v. Hilton Davis Chem. Co.*, 520 U.S. 17, 41 U.S.P.Q.2d 1865 (1997). However, I do not believe that the Supreme Court wishes to stand in the way of a sensible solution. For one, the Court expressly declined to consider whether the application of the doctrine of equivalents is a task for the judge or jury. *Warner-Jenkinson*, 520 U.S. at 38-39, 41 U.S.P.Q.2d at 1875. That infringement under the doctrine is a fact issue is of no moment; equity courts deal with facts all the time. In addition, a Supreme Court that did not balk at making the most critical aspect of infringement law—claim construction—a matter for judges alone, *see Markman v. Westview Instruments, Inc.*, 517 U.S. 370, 38 U.S.P.Q.2d 1461 (1996), may, when pressed, find it appropriate to acknowledge the equitable nature of the doctrine of equivalents and the reasons why judges have a comparative advantage in equitable adjudication.

The Supreme Court in its *Warner-Jenkinson* opinion did opine that "intent plays no role in the application of the doctrine of equivalents." *Warner- Jenkinson*, 520 U.S. 17, 41 U.S.P.Q.2d at 1874. That suggests that at least some of the considerations involved in traditional equitable analysis would not be appropriate. However, the Court's statement in that regard was preceded by a reference to *Graver Tank* and the fact that, while *Graver Tank* leaves room for the inclusion of intent-based elements in the doctrine, it did not require them. From this, the Court opined that the "better view" was to exclude intent-based considerations. Today, the Court might well conclude that, since the so- called "objective" approach has proven unworkable, a return to the equitable analysis approach would be the "better view." Particularly would this be so if this court led the way, since in its *Warner-Jenkinson* decision the Supreme Court was doing little more than echoing what we had said on the subject of intent in our *Hilton Davis* opinion.

We are the court primarily responsible for the state of patent law, and the Supreme Court has pronounced it our duty to "best implement procedural improvements to promote certainty, consistency, and reviewability to this area of the law." *Warner-Jenkinson*, 520 U.S. at 39 n. 8, 41 U.S.P.Q.2d at 1876 n. 8. It is time for us to "think outside the box," and restore the doctrine of equivalents to its original equitable function and purpose, thus providing a judicial process that lends itself to making the doctrine both determinate and predictable.

Those who are wedded to the existing regimen can no doubt find all sorts of objections to this proposed approach. I cannot say that the approach I advocate is a panacea for all that ails the equivalents practice. I can say that what we have does not work very well, and, as we did in *Markman*, it is time to try something else, something that has substantial jurisprudential legitimacy and holds out some promise for improvement. Until such time as this court is of a mind to seek and design a long-term solution to the equivalents problem, however, I have

little choice but to join in even this limited effort to cabin what is otherwise, and I fear remains, a doctrine short on predictable results, and short on the achievement of equity to which it owes its existence.

LOURIE, Circuit Judge, concurring.

I fully join the majority opinion. However, I write separately to respond to comments and concerns of supporters of the flexible bar rule.

It has been stated by a dissenter that most of the members of the majority have authored opinions supporting a flexible bar. I am one of them. My obligation is to follow precedent, and it is correct that our court has had precedent for a flexible bar, albeit not necessarily consistent precedent. I therefore followed what seemed to be the strongest line of precedent at that time. *See, e.g., Sextant*, 172 F.3d 817, 49 U.S.P.Q.2d 1865; *Pharmacia & Upjohn Co. v. Mylan Pharms., Inc.*, 170 F.3d 1373, 50 U.S.P.Q.2d 1033 (Fed. Cir. 1999); *Bai v. L & L Wings, Inc.*, 160 F.3d 1350, 48 U.S.P.Q.2d 1674 (Fed. Cir. 1998); *Laitram Corp. v. Morehouse Indus., Inc.*, 143 F.3d 1456, 46 U.S.P.Q.2d 1609 (Fed. Cir. 1998); *Lockwood v. Am. Airlines, Inc.*, 107 F.3d 1565, 41 U.S.P.Q.2d 1961 (Fed. Cir. 1997). However, in light of experience, and recognizing the Congressional requirement for precision in claims, 35 U.S.C. § 112, ¶ 2, I am persuaded that when we have the opportunity en banc to depart from an unworkable rule by holding patent applicants to their actions in the PTO, we should do so. Adoption of a firmer rule today is in the best interest of the patent system.

Our holding does not violate the Supreme Court's guidance in *Warner- Jenkinson Co. v. Hilton Davis Chem. Co.*, 520 U.S. 17 (1997). The key issue decided by the Court in *Warner-Jenkinson* relating to prosecution history estoppel was whether the reasons for a claim amendment are relevant in determining whether prosecution history estoppel should be

applied. *Id.* at 30. The Court held that the reason for an amendment is relevant, as amendments made for substantial reasons relating to patentability lead to an estoppel. While the Court referred to the avoidance of prior art as a principal reason for an amendment relating to patentability, it did not limit the application of prosecution history estoppel to claims that were amended for prior art reasons. *Id.* at 30-31. Hence, this court, in its present decision, has refined the scope of "a substantial reason related to patentability" to include any reason relating to a statutory requirement for patentability. In other words, if a claim was not allowable for statutory reasons without an amendment, then the amendment was presumptively made for a reason relating to patentability. Such an amendment may relate either to prior art or to various requirements under 35 U.S.C. §§ 101 and 112.

The Supreme Court has not addressed what scope of equivalents remains when a claim has been clearly amended for patentability reasons. The closest the Court came to doing so was in *Warner-Jenkinson*, where it created the presumption that an amendment was made for a reason relating to patentability when it is unclear why that amendment was made. The Court then stated: "In those circumstances, prosecution history estoppel would bar the application of the doctrine of equivalents as to that element." *Warner-Jenkinson*, 520 U.S. at 33; *see Sextant Avionique, S.A. v. Analog Devices, Inc.*, 172 F.3d 817, 831, 49 U.S.P.Q.2d 1865, 1874-75 (Fed. Cir. 1999) (explaining that this language only applies when the reason for an amendment is unknown). It did not otherwise render any holding concerning the scope of equivalents that remains when a claim has clearly been amended for patentability reasons. Thus, this en banc court is free to do so today. In fact, today we merely extend the Supreme Court's complete bar against the application of the doctrine of equivalents, which applies when it is unclear why an amendment was made and the patentee fails to rebut the presumption that an amendment was made for

reasons relating to patentability, to cases in which the patentee clearly amended a claim for patentability reasons.

It has been said that there is no hard evidence showing that the so- called "flexible" bar impairs predictability. While it is true that empirical data may not be available, powerful evidence may be garnered from the experience of this court, which monthly reviews appeals in which infringement is asserted under the doctrine of equivalents even though the accused product is clearly not within the literal scope of the asserted claims. Many of these appeals involve prosecution histories in which amendments for patentability reasons have been made. Yet, equivalence is argued in the hope that one panel might find equivalence where another would not. That surely is persuasive evidence that the current flexible bar is not working. Our court was created with the opportunity and mandate to observe such problems in the law and to act upon a possible solution. *See Warner-Jenkinson*, 520 U.S. at 39 n. 8, 40, 41 U.S.P.Q.2d at 1875 n. 8, 1876 ("We expect that the Federal Circuit will refine the formulation of the test for equivalence in the orderly course of case-by-case determinations, and we leave such refinement to that court's sound judgment in this area of its special expertise."). That is why we have been given exclusive jurisdiction over patent appeals. 28 U.S.C. § 1295(a).

It has been suggested that there are settled expectations in the bar and innovation community regarding the present rule. The only settled expectation currently existing is the expectation that clever attorneys can argue infringement outside the scope of the claims all the way through this court of appeals. Such a settled expectation should become unsettled. Surely, when prosecuting a patent, patent practitioners have no settled expectations of being able to assert the doctrine of equivalents. Any patent attorney who fails to claim all that his inventor has invented, and that is patentable, is ill-advised to settle for a narrower claim than he considers justified on the assumption that he can rely on the doctrine of equivalents for

broader coverage. Such reliance is a highly risky prospect given that the patent statute requires precise claims. 35 U.S.C. § 112, ¶ 2. When a patent applicant is faced with a rejection, or expects a rejection, he (or she) is master of his claims. He can stand his ground and appeal, or amend the claims. If the latter course of action is chosen, such conduct, which is known to the world, should bind the applicant. The fact that the applicant may have to appeal an unjustified rejection, incurring loss of time and expense, does not mean that we should refrain from adding clarity to the meaning of claims by holding patent applicants to their actions in the Patent and Trademark Office ("PTO").

Additionally, the PTO does not make "basic assumptions" relating to a range of equivalents to be allowed. *See Warner-Jenkinson*, 520 U.S. at 32, 41 U.S.P.Q.2d at 1872 ("[I]f the PTO has been requesting changes in claim language without the intent to limit equivalents . . . we should be extremely reluctant to upset the basic assumptions of the PTO without substantial reason for doing so."). The PTO examines claims in light of the disclosure of the patent application and against the prior art. *See* 35 U.S.C. § 131 (1994) ("Examination of application"); Manual of Patent Examining Procedure §§ 701, 702 (7th ed. 2000) ("The main conditions precedent to the grant of a patent to an applicant are set forth in 35 U.S.C. [§§] 101, 102 and 103 . . . [T]he examiner should review the contents of [a new] application to determine if the application meets the requirements of 35 U.S.C. [§] 111(a) [(setting forth the basic requirements for a patent application)]."). It does not issue patents with any expectations regarding equivalents.

It is said that *stare decisis* compels us to stay the course with the old rule. I thought the same regarding *Zurko*. *See Dickinson v. Zurko*, 527 U.S. 150, 170-72 (Rehnquist, C.J., dissenting). However, the Supreme Court, in its wisdom, believed that decades of practice should be overturned in order to bring our standard of judicial review of findings of fact made by the PTO into line with the standard of review applied to

other agency decisions. *Id.* at 152. Similarly, a majority of this court believes that important policy considerations relating to achieving the certainty contemplated by Congress justifies departing from an older unworkable rule.

Finally, one of the dissenters fears that today's ruling provides would-be copiers with a free pass to appropriate the essence of an invention and yet escape infringement. That is theoretically true. In the future, a competitor may more closely approach the limits of the claims in a patent in which a narrowing amendment has been made without fear of liability. Occasional injustices may occur. However, I believe that such occasional injustices will be greatly outnumbered by competitors who will be able to introduce innovative products outside the scope of claims without fear of unjustified, protracted, and expensive litigation. In today's world, the specter of unpredictable equivalence claims haunts too many business decisions, while the overwhelming majority of equivalence claims ultimately fail. It is more than justified to lessen this fear and hold patent applicants to the consequences of their public prosecution decisions. The rule we announce today should encourage innovation, lessen uncertainty, and diminish the volume of unnecessary litigation, while providing patentees with protection commensurate with the disclosed and allowed scope of their inventions.

As for the biotechnology example hypothesized by one of the dissenters, I believe the concern is largely theoretical. The first inventors in a field are only entitled to claim what they can describe and enable, and I am confident that competent patent attorneys can readily craft their claims to cover that subject matter so that estoppel can be avoided. Moreover, subsequent inventors will be better able to find and develop improved products without fear of lawsuits. Predictability will be enhanced.

The fact is that, even under our past rule of flexible bar, no court has rendered a decision holding infringement only under the doctrine of equivalents by an accused gene or protein. To

the extent that a competitor has been deterred from developing a new compound for fear that it will be held to be an infringer under an equivalence theory, I believe that our new rule will provide a clear net gain for innovation and the public. They will benefit from the greater certainty that new compounds not within the scope of granted claims can be developed without fear of protracted litigation.

For these reasons, and for others aptly expressed by the majority opinion, I join the majority opinion.

CONCURRING/DISSENTING OPINION

MICHEL, Circuit Judge, concurring-in-part, dissenting-in-part, with whom Circuit Judge RADER joins.

I join the majority opinion with respect to the disposition of Questions 1, 2, 4, and 5. However, I must dissent from the majority's response to Question 3 because I believe it contradicts Supreme Court precedent and policy. In *Warner-Jenkinson Co., Inc. v. Hilton Davis Chemical Co.*, 520 U.S. 17, 40, 117 S. Ct. 1040, 1054 (1996), the Supreme Court encouraged our court to "refine the formulation of the test for equivalence." I am convinced, however, that the majority's new "complete bar rule," far from being merely such a refinement, contravenes consistent Supreme Court authority. Not only does the majority's new rule directly contradict one Supreme Court holding, but it undermines the legal standard that the Supreme Court has consistently articulated in seven other cases for determining the scope of such estoppel. Moreover, because most patents contain claims that were amended during prosecution, the majority's holding effectively strips most patentees of their rights to assert infringement under the doctrine of equivalents, despite the Supreme Court's unanimous adherence to the doctrine in *Warner-Jenkinson*. The majority's new rule constitutes a rejection of the policy advanced by the Supreme Court in *Warner-Jenkinson* that the all-elements rule and prosecution history estoppel are sufficient

to balance the competing needs of granting meaningful protection to patentees and of notifying the public of the effective scope of a patentee's claims.

I. The Majority's Rule Upsets the Balance Struck by the Supreme Court Through Warner-Jenkinson Between the Competing Needs for Meaningful Patent Protection and Adequate Public Notice.

Before discussing particular Supreme Court cases, I believe it is important to summarize the doctrinal framework that the Supreme Court has consistently employed for over a century to balance a patentee's need for meaningful protection against copying and the public's need for notice as to the effective scope of a patentee's claims. The Supreme Court has consistently stated, and has done so as recently as *Warner-Jenkinson*, that application of the all- elements rule, as supplemented by prosecution history estoppel, sufficiently balances the competing needs of meaningful patent protection and adequate public notice. Today's majority upsets this balance, holding that the public notice function of patents can only be fulfilled by limiting the effective scope of patents with amended limitations to the literal wording of such limitations.

The limitations of a patent's claims provide an initial measure of the effective scope of the patent, both literally and under the doctrine of equivalents. The all-elements rule provides that every limitation of a claim is material, and that an accused device lacking a corresponding element, or an equivalent thereof, for every limitation cannot infringe the claim, even under the doctrine of equivalents. *See Pennwalt Corp. v. Durand-Wayland, Inc.*, 833 F.2d 931, 937, 4 U.S.P.Q.2d 1737, 1741 (Fed. Cir. 1987) (en banc) (holding that a "device that does not satisfy [a claim limitation] at least equivalently does not function in substantially the same way as the claimed invention," and thus cannot infringe under the doctrine of equivalents). The Supreme Court has recognized for more than a century that the public is entitled to make, use, or sell devices that lack one or more elements corresponding to

the limitations of a patent's claims, or their equivalents. *See, e.g., Shepard v. Carrigan*, 116 U.S. 593, 597, 6 S. Ct. 493, 495, (1886) ("Where an applicant for a patent to cover a new combination is compelled by the rejection of his application by the patent- office to narrow his claim by the introduction of a new element, he cannot after the issue of the patent broaden his claim by dropping the element which he was compelled to include in order to secure his patent.").

In *Warner-Jenkinson*, the Supreme Court reiterated that under the all- elements rule and prosecution history estoppel, the public receives adequate notice as to the enforceable scope of patent claims. *See Warner-Jenkinson*, 520 U.S. at 29-30, 117 S. Ct. at 1049 ("So long as the doctrine of equivalents does not encroach beyond the limits [of the all-elements rule] just described, or beyond related limits to be discussed *infra* [prosecution history estoppel], we are confident that the doctrine will not vitiate the central functions of the patent claims themselves.") (citation omitted). Moreover, the *Warner-Jenkinson* Court reaffirmed that, although limiting its application, the all-elements rule still accommodates the right of patentees to assert infringement of some equivalents. *See id.* at 32, 117 S. Ct. at 1050 (quoting *Hubbell v. United States*, 179 U.S. 77, 82, 21 S. Ct. 24, 26 (1900) ("If it be a claim to a combination, and be restricted to specified elements, all must be regarded as material, leaving open only the question whether an omitted part is supplied by an equivalent device or instrumentality.") (citation omitted, emphasis added)); *Shepard v. Carrigan*, 116 U.S. 593, 598, 6 S. Ct. 493, 495 (1886) (same); *Fay v. Cordesman*, 109 U.S. 408, 421, 3 S. Ct. 244-45 (1883) (same). Under the all-elements rule, the claims themselves provide considerable notice to the public as to the effective scope of the patent (i.e., a patentee cannot assert infringement by a device that lacks an equivalent of one or more limitations of the claim, as issued), while preserving for the patentee a scope of protection under the doctrine of equivalents to prevent copying.

When a patent applicant narrows his claims during prosecution by adding a limitation to traverse a prior art rejection, the substance of the communications between the applicant and the examiner may *further* notify the public as to additional limits on the enforceable scope of the patent claims. Depending on factors such as the breadth of the examiner's rejection, the manner in which the patent applicant amends his claims to overcome the objection, and the nature of the technology at issue, a reasonable competitor might construe the applicant's remarks and amendments to evince a surrender of claim scope greater than the all-elements rule would require. *See Hughes Aircraft Co. v. United States*, 717 F.2d 1351, 1363, 219 U.S.P.Q. 473, 481 (Fed. Cir. 1983) ("Depending on the nature and purpose of an amendment, it may have a limiting effect within a spectrum ranging from great to small to zero."). We describe this doctrine as "prosecution history estoppel," precisely because a hypothetical reasonable competitor should be able to rely on the applicant's representations and amendments as a surrender of subject matter.[11] The doctrine of prosecution history estoppel supplements the all-elements rule by providing a set of rules for notifying the public whether, and to what extent, the scope of protection is even narrower than what the all-elements rule would allow. *See Warner-Jenkinson*, 520 U.S. at 34, 117 S. Ct. at 1051 ("[P]rosecution history estoppel places reasonable limits on the doctrine of equivalents, and further [than the all-elements rule] insulates the doctrine from any feared conflict with the Patent Act.").

In contrast to the doctrine of prosecution history estoppel we have applied until today, the majority's new complete bar rule does not supplement the all-elements rule as a way to further clarify the scope of equivalents available to the patentee. Rather than attempt to "refine" our case law as to how the

---

[11] We do not require the alleged infringer to demonstrate actual personal reliance on the statements in the prosecution history. *See* 5 Donald S. Chisum, Chisum on Patents, § 18.05[1][a][i], at 18-416.

added claim limitations should be enforced in light of the substance of the communications between examiner and applicant, the majority's new rule simply forecloses all application of the doctrine of equivalents for any amended claim limitation. This approach by-passes the all-elements rule altogether. *See* Maj. Op. at 48a ("Following the methodology outlined above, we conclude that prosecution history estoppel bars the application of the doctrine of equivalents to this element of the claims of the Carroll patent. In view of this determination, we do not reach the 'all elements' rule.").

The majority's concept of prosecution history estoppel is hardly an "estoppel" at all. The majority's approach gives no consideration to whether a reasonable competitor would rely on the nature of the rejections and of the amendments and statements between the applicant and the examiner as evidence of a surrender of subject matter. According to the majority, once there has been a limiting amendment, no consideration may be given to the breadth of the rejection, the closeness of the prior art, the manner of the applicant's remarks and amendments, or the nature of the technology. All equivalents of that limitation are foreclosed by the mere fact of amendment. The majority's rule might more aptly be called "bar by amendment" rather than "estoppel," which has always been measured by what a reasonable competitor would understand the applicant to have surrendered in order to procure his patent. I believe that looking solely to the fact of amendment, rather than the substance of communications between the applicant and the examiner, is contrary to the principles that the Supreme Court (and our court) has always applied in determining the scope of estoppel.

Under the majority's rule, in contrast to the Supreme Court's application of the all-elements rule and prosecution history estoppel, a patentee retains no range of equivalents for a claim limitation that has been amended for patentability reasons. This approach upsets the Supreme Court's balance between the competing needs of sufficient public notice and meaningful

patent protection. At the very minimum, I believe the majority's rule is unfairly harmful, because it deprives patentees of any recourse to the doctrine of equivalents for any added or narrowed limitation, no matter how minor the amendment. More importantly, however, I believe that precluding a patentee's right to seek protection under the doctrine of equivalents for amended limitations will, in many cases, "convert the protection of the patent grant into a hollow and useless thing." *Graver Tank & Mfg. Co. v. Linde Air Products Co.*, 339 U.S. 605, 607, 70 S. Ct. 854, 856 (1950).

Would-be copyists, of course, will exploit the majority's bar. Unwittingly, the majority has severely limited the protection previously available to patentees. Indeed, it may nullify the doctrine of equivalents. Under the majority's approach, anyone who wants to steal a patentee's technology need only review the prosecution history to identify patentability-related amendments, and then make a trivial modification to that part of its product corresponding to an amended claim limitation. All the other limitations may be copied precisely. The competitor will then be free to make, use, or sell an insubstantial variant of the patentee's invention. It appears to me that this complete bar approach upsets the balance that the Supreme Court has struck. Under this approach, most patentees will lose the protection against copying that the Supreme Court unanimously reaffirmed in *Warner-Jenkinson*.

II. Supreme Court Precedent

The majority asserts that the Supreme Court has never "addressed or answered" the question as to whether a scope of equivalents remains after a claim limitation has been added or amended for a reason relating to patentability. The majority quotes language from six Supreme Court cases dealing with prosecution history estoppel,[12] and asserts that in these six

[12] These six cases are *Warner-Jenkinson*, 520 U.S. at 17, 117 S. Ct. at (continued...)

cases, "the Court did not analyze the actual scope of equivalents that might be available when prosecution history estoppel applied." The Court thereby posits that "[w]e think it is fair to say" that this question remains open. I agree with the majority that, in four of these six cases, the Supreme Court did not address the question presently at bar. As to the other two cases, *Hubbell v. United States*, 179 U.S. 77, 21 S. Ct. 24 (1900), and *Shepard v. Carrigan*, 116 U.S. 593, 6 S. Ct. 493 (1886), the majority and I draw different conclusions. Most importantly, however, I can hardly agree with my colleagues that, upon a review of only these six Supreme Court cases, they can rightfully draw the conclusion that never has the Court "answered or addressed" today's question.

The Supreme Court has decided many more than these six cases relevant to prosecution history estoppel. *Hurlbut v. Schillinger*, 130 U.S. 456, 9 S. Ct. 584 (1889), is one particularly noteworthy case, wherein the Supreme Court ruled that a patentee, who had disclaimed a portion of his invention, and who had been found in prior litigation to be precluded from asserting his claims against one accused device in light of that disclaimer, nonetheless remained entitled to a judgment of infringement by a different device that was more closely equivalent to his claimed invention. The majority also disregards the legal standard repeatedly articulated by the Supreme Court that is consistent only with a flexible approach to prosecution history estoppel, i.e., that an amended claim may be infringed if "an omitted part is supplied by an equivalent device or instrumentality." *See, e.g., Warner-Jenkinson*, 520 U.S. at 32, 117 S. Ct. at 1050; *Fay v. Cordesman*, 109 U.S. 408, 420-21, 3 S. Ct. 236, 244-45 (1883). Furthermore, the

[12] (...continued)
1040; *Exhibit Supply Co. v. Ace Patents Corp.*, 315 U.S. 126, 62 S. Ct. 513 (1942); *Smith v. Magic City Kennel Club*, 282 U.S. 784, 51 S. Ct. 291 (1931); *Weber Elec. Co. v. E.H. Freeman Elec. Co.*, 256 U.S. 668, 41 S. Ct. 600 (1921); *Hubbell v. United States*, 179 U.S. 77, 21 S. Ct. 24(1900); and *Shepard v. Carrigan*, 116 U.S. 593, 6 S. Ct. 493 (1886).

majority nowhere recognizes that the Supreme Court has articulated a consistent, uniform doctrine for applying the doctrine of prosecution history estoppel since the 1880s, with no suggestion in *Warner-Jenkinson* or other recent cases that it sought to depart from its earlier holdings.

Many of the cases I cite were decided in the 1800s. Before discussing them, I would like to make three general points about this older precedent. First, the Supreme Court was very active in the patent field in the late 1800s. From 1880 to 1900, the Court decided no fewer than ninety patent infringement cases, with many of these cases being highly relevant to the present appeal. From my review of these cases, and the far fewer number of cases the Court decided in the 1900s, it appears that the Court established the basic contours of patent law in the late 1800s, including on equivalency and estoppel, and has reaffirmed these same principles ever since. Indeed, more recent Supreme Court cases, such as *Warner-Jenkinson*, 520 U.S. at 31, 117 S. Ct. at 1049-50; *Graver Tank & Manufacturing Co. v. Linde Air Products Co.*, 339 U.S. 605, 608-09, 70 S. Ct. 854, 856 (1950); *Exhibit Supply Co. v. Ace Patents Corp.*, 315 U.S. 126, 136, 62 S. Ct. 513, 518-19 (1942); and *Smith v. Magic City Kennel Club, Inc.*, 282 U.S. 784, 790, 51 S. Ct. 291, 293-94 (1931), are remarkable in the degree to which they cite nineteenth century cases, and in their express insistence on adhering to older precedent.

Second, in addition to being old, many of the cases I cite involve reissue patents.[13] But the law of prosecution history

---

[13] The Patent Act of 1836 authorized a patentee to surrender the claims of his original patent and to obtain a reissue patent whenever the patent was "inoperative, or invalid, by reason of a defective or insufficient description or specification, or by reason of the patentee claiming in his specification as his own invention, more than he had or shall have a right to claim as new." Patent Act of 1836, Ch. 357, 5 Stat. 117, at § 13 (July 4, 1836); *see also Gage v. Herring*, 107 U.S. 640, 644-45, 2 S. Ct. 819, 823 (1883). The Patent Act of 1870, which governs many of the cases discussed below, made

(continued...)

estoppel has developed with equal applicability to reissue patents and original patents whose claims were amended during prosecution. By at least 1879, the Supreme Court recognized that the process of obtaining a reissue patent precluded the patentee from recapturing that which he had disclaimed (i.e., surrendered) through the reissuance process. *See Leggett v. Avery*, 101 U.S. 256, 260 (1879); *see also Union Metallic Cartridge Co. v. United States Cartridge Co.*, 112 U.S. 624, 642, 5 S. Ct. 475, 485 (1884) (applying principles of prosecution history estoppel to claims of reissue patent). Considering that *Leggett*, which concerns a reissue patent, is the foundation for much of the Court's subsequent treatment of what we now call "prosecution history estoppel," *see, e.g., Schriber-Schroth Co. v. Cleveland Trust Co.*, 311 U.S. 211, 221, 61 S. Ct. 235, 240 (1940) (citing *Leggett* as basis of estoppel holding), I find nothing to suggest that the presence of a reissue patent, in several cases cited below, alters the legal standards articulated by the Court for resolving disputes involving prosecution history estoppel on claims issued in the original prosecution. Rather, the Supreme Court compared the original and reissue claims to measure the scope of estoppel, treating the reissue claims like amended claims.

Finally, although these older cases do not specifically recite either of the synonymous phrases "prosecution history estoppel" or "file wrapper estoppel," the principles articulated in these cases form the core of the doctrine of prosecution history estoppel that we have applied until today. The phrase "file wrapper estoppel" was not employed by the Supreme Court until its decision in *Exhibit Supply Co. v. Ace Patents Corp.*, 315 U.S. 126, 128, 62 S. Ct. 513, 515 (1942), and the Supreme Court did not use the phrase "prosecution history

---

[13] (...continued)
no change in this provision, except for the deletion of the words "description or." Patent Act of 1870, Ch. 230, 16 Stat. 198-217, at § 53 (July 8, 1870); *see also Gage*, 107 U.S. at 644-45, 2 S. Ct. at 823.

estoppel" until *Warner-Jenkinson*, 520 U.S. at 30, 117 S. Ct. at 1049. Nonetheless, the Court recognized in *Warner-Jenkinson* that many of the cases I cite below, such as *Sutter* and *Hubbell*, indeed set forth the principles of our present doctrine of "prosecution history estoppel." *See Warner-Jenkinson*, 520 U.S. at 30-31, 117 S. Ct. at 1049-50. I believe that the absence of the phrase "prosecution history estoppel" in the cases I cite is hardly a convincing basis for distinguishing them.

A. *Goodyear Dental Vulcanite Co. v. Davis*

One of the first cases in which the Supreme Court discussed the principles underlying our present doctrine of prosecution history estoppel is also one of the most instructive. *Goodyear Dental Vulcanite Co. v. Davis*, 102 U.S. 222, 223-27 (1880) concerns a reissue patent for a rubberized dental plate, claiming "[t]he plate of hard rubber or vulcanite, or its equivalent, for holding artificial teeth, or teeth and gums, substantially as described." The Supreme Court recognized that the patentee, Cummings, had restricted his claims during the reissuance process to a dental plate made of hard "vulcanized" rubber, and thus that Cummings was precluded from asserting that a dental plate made of celluloid (a softer, chemically distinct, unvulcanized material) was an equivalent of the claimed invention. Notwithstanding this restriction on the available scope of equivalents, the Court nonetheless stated that Cummings could assert infringement by other products that were equivalent to those recited in the patent:

> If, when the patent was granted, there were known substances, other than rubber or caoutchouc, gutta-percha, or gums, that could be vulcanized by the Goodyear process, and converted from a soft into a hard, elastic material, any use of that material for a dental plate *might have been an equivalent* for the Cummings material, and an infringement of his patent.

Id. at 227 (emphasis added). The Court continued, stating that although Cummings had limited his claims to a vulcanized product, and was thus precluded from asserting the equivalence of a softer, celluloid, unvulcanized product, Cummings nonetheless retained protection against equivalents. The Court stated: "It may be conceded *the patentee is protected against equivalents for any part of his invention*." *Id.* at 230 (emphasis added). Thus, the Court recognized that although a patentee, by amending his claims, may be precluded from asserting a large range of equivalents, he may still be able to assert his patent against devices that fall within a narrower range of equivalents. This statement is only consistent with a flexible approach to prosecution history estoppel, and would be meaningless if the Court had intended a complete bar to apply.

Moreover, the Court stated that Cummings was protected against equivalents "whether he had claimed them or not." *Id.* By this statement, the Court clarified that ~~it was not~~ necessary for patent applicants like Cummings to recite the words "or its equivalent" or "substantially as described" in the patent claims, but rather that patentees' protection against equivalents arises independently of the particular wording of the claims.

The majority argues that the *Goodyear* Court "did not discuss prosecution history estoppel." I agree that the particular phrase "prosecution history estoppel" nowhere appears in *Goodyear*. However, the principles articulated in *Goodyear* are the foundation of the modern doctrine of prosecution history estoppel. Indeed, the Supreme Court's first opinion to discuss the doctrine of "file wrapper estoppel," *Exhibit Supply Co. v. Ace Patents Corp.*, 315 U.S. 126, 128, 62 S. Ct. 513, 515 (1942), specifically mentions *Goodyear* as a basis of that doctrine. It is also true, as the majority points out, that the *Goodyear* Court did not rule in favor of the patentee, and thus that the language I cite does not constitute a holding. I cannot agree with the majority, however, that the Court's statements fail to constitute "explicit and carefully considered language," and that the rule of *Goodyear* may be disregarded. Rather, as

I will describe in the next case I cite, the Court soon thereafter applied these principles to hold that a patentee retains a range of enforceable equivalents, despite having made a disclaimer that restricted his available range of equivalents.

B. *Hurlbut v. Schillinger*

Hurlbut v. Schillinger, 130 U.S. 456, 9 S. Ct. 584 (1889), and an earlier related case, *California Artificial Stone-Pav Co. v. Schalicke*, 119 U.S. 401, 7 S. Ct. 391 (1886), concern a patent for an improvement in concrete pavements, claiming an "arrangement of tar-paper or its equivalent between adjoining blocks of concrete," such that the imposition of tar-paper between the paving blocks would facilitate the removal of a block that subsequently becomes damaged, without disrupting adjacent blocks. Schillinger obtained a reissue patent, amending the original specification to state, among other things, that "where cheapness is an object, the tar-paper may be omitted and the blocks formed without interposing anything between their joints." *Id.* at 462, 9 S. Ct. at 586. In his reissue patent, Schillinger also obtained a claim that omitted any reference to tar-paper or its equivalent.

After obtaining his reissue patent, Schillinger filed a disclaimer with the Patent Office, stating that his reissue claim was too broad, and covered kinds of pavement "of which your petitioner was not the first inventor." *Id.* at 463, 9 S. Ct. at 586. Schillinger disclaimed any coverage to an arrangement of pavement wherein the tar-paper is omitted and no material is used to separate the concrete blocks. *See id.*

Schillinger brought suit against several competitors, and two of the disputes reached the Supreme Court. In the first, *California Paving*, 119 U.S. at 406-07, 7 S. Ct. at 394-95, the Court remarked that the accused paving was neither separated into individual blocks, and nor had any material been interposed between the blocks while they were still plastic. The Court noted that Schillinger had disclaimed "the forming of blocks from plastic material without interposing anything

between their joints while in the process of formation." *Id.* at 407, 7 S. Ct. at 394. The Court found no infringement, concluding that "what the defendant did was just what the patentee disclaimed." *Id.* at 407, 7 S. Ct. at 395. Thus, it is clear from *California Paving* that Schillinger's disclaimer was sufficient to preclude him from asserting infringement by the defendant's arrangement of pavement. Although the Court did not employ the phrase "prosecution history estoppel" to describe this limitation on the effective scope of his patent, I think it is apparent that Schillinger's disclaimer had invoked such an estoppel.

In Schillinger's second suit to reach the Supreme Court, the accused product was an arrangement of pavement whose individual blocks, while still plastic, were separated from one another by means of a trowel. *See Hurlbut*, 130 U.S. at 467-68, 9 S. Ct. at 588. The Court recognized that the stroke of a trowel to separate the blocks was different than inserting tar-paper between the blocks. *See id.* The Court also recognized that Schillinger had limited the protective scope of his reissue patent through his disclaimer, and was thus precluded from asserting his claims against pavement arrangements wherein the blocks were not separated. *See id.* at 466, 9 S. Ct. at 587. The Court nonetheless held that Schillinger was still entitled to a range of equivalents after having made his disclaimer, and that using a trowel to separate the blocks was equivalent to using tar-paper. The Court stated:

> The effect of the disclaimer was to leave the patent to be one for a pavement wherein the blocks are formed by interposing some separating material between them. To limit the patent to the *permanent interposition of a material equivalent to tar-paper*, would limit the actual invention. The use of a bottom layer of coarse cement, and placing it on a course of fine cement, and dividing the upper course into blocks by a trowel run partially or wholly

> through the upper course while it is plastic, in a line coincident with the joints between the sections in the lower layer, *accomplishes the substantial results of Schillinger's invention, in substantially the way devised by him, and is within the patent as it stands after the disclaimer*.

Id. at 465, 9 S. Ct. at 587 (emphasis added). The Court continued, emphasizing that the effect of the disclaimer was not to completely preclude Schillinger from asserting equivalence, but rather that the scope of the preclusion was determined by reference to the actual embodiments that Schillinger had surrendered. The Court stated:

> *The disclaimer took out of the first claim of the reissue only so much thereof* as claimed a concrete pavement made of the plastic material laid in detached blocks, *without interposing anything in the joints* in the process of formation, leaving that claim to be one for such a pavement laid in detached blocks, when free joints are made between the blocks, by interposing permanently or temporarily between them, in the process of their formation, tar-paper *or its equivalent*.

Id. (emphasis added). The Court concluded that the accused pavement constituted an equivalent of the claimed invention "as it stands after the disclaimer," and thus that Schillinger was entitled to a judgment of infringement. The Court stated:

> We are, therefore, of opinion that the first claim of the reissue, as it stands after the disclaimer, is infringed, because the defendant's pavement is a concrete pavement, laid in detached blocks or sections, substantially in the manner shown and described in the specification of the reissue, the detached blocks in the upper course *being*

> *the equivalent* of the detached blocks or sections of the Schillinger pavement; and that the second claim of the reissue is infringed, because the temporary use of the trowel or cutting instrument, to divide the upper course into blocks, *is the equivalent of the tar-paper* of the Schillinger patent . . ..

Id. at 469, 9 S. Ct. at 588 (emphasis added).

Today's majority, noting that Schillinger recited the phrases "substantially" and "or its equivalents" in the patent claims, appears to argue that the defendant in *Hurlbut* had literally infringed the claims, and that the Court "did not discuss the issue of the scope of equivalents that remained under the doctrine of equivalents after the disclaimer." I do not agree, however, that the mere presence of the words "equivalent" or "substantially" in Schillinger's claim language somehow reduces the infringement analysis to one of literal infringement. As noted above, the *Goodyear* Court made clear that a patentee is protected against equivalents, "whether he had claimed them or not." *Goodyear*, 102 U.S. at 230. The tension at the heart of these disputes—between meaningful patent protection and adequate public notice—persists regardless of whether "equivalents" are recited in the claims or are claimed implicitly through the doctrine of equivalents. I believe that the legal framework employed by the *Hurlbut* Court to limit the range of equivalents available to Schillinger applies whether or not the words "substantially" or "or its equivalents" appear in the claims.

The Court's holding in *Hurlbut* is simply an application of the principles it established in *Goodyear*. In both cases, the Court recognized that the patent applicants' disclaimers and amendments had precluded the patentees from asserting the equivalence of certain accused devices. In both cases, however, the Court stated that, despite the disclaimer or amendment, the patentee retained a limited scope of equivalents. Although the Court articulated its reasoning in *Goodyear* without holding in

favor of the patentee, these same principles are the foundation of the Court's clear holding for the patentee in *Hurlbut*. As I read these cases, *Goodyear* and *Hurlbut* entitle a patentee to a range of equivalents despite the fact of a limiting amendment.

C. The Majority's Holding Contradicts Six Other Supreme Court Cases That Declare a Flexible Approach to Prosecution History Estoppel.

Goodyear and *Hurlbut* are the two cases I have identified where the Court has most fully described its flexible approach to prosecution history estoppel. These cases, however, are far from the only instances where the Court has set forth legal principles that are consistent only with a flexible approach. Following are six more cases where the Court set forth a legal standard that provides that patentees who have amended their original claims, and who are thus precluded from asserting a certain range of equivalents, nonetheless retain the right to assert a more limited range of equivalents. In three of these cases, the Supreme Court declared that a patentee who had introduced a new claim limitation during prosecution or during reissuance would be entitled to enforce his amended claims by showing that in the accused device, "an omitted part is supplied by an equivalent device or instrumentality." *Hubbell v. United States*, 179 U.S. 77, 82, 21 S. Ct. 24, 26 (1900); *Shepard v. Carrigan*, 116 U.S. 593, 598, 6 S. Ct. 493, 495 (1886); *Fay v. Cordesman*, 109 U.S. 408, 420-21, 3 S. Ct. 236, 244-45 (1883). Moreover, the Supreme Court restated this legal standard verbatim in *Warner-Jenkinson*, 520 U.S. at 32, 117 S. Ct. at 1050 (quoting *Hubbell*). Although the Supreme Court recited this same legal standard in the very same words on four separate occasions over the span of 113 years, today's majority regards these cases as lacking "explicit and carefully considered language." I cannot agree.

1. *Fay v. Cordesman*

Fay v. Cordesman, 109 U.S. 408, 409, 3 S. Ct. 236, 237 (1883), concerned three patents, including a reissue patent, for

a mechanical saw whose blade is alternately pushed and pulled. The reissue patent contained five claims, all of which were substantially amended from the single claim of the original patent. *See id.* at 413, 3 S. Ct. at 239-40. Noting that the accused device, a continuously rotating band saw, did not embody an adjustable saw guard, as recited in an asserted claim of the reissue patent, the Court ruled that there could be no infringement because: "If it be a claim to a combination, and be restricted to specified elements, all must be regarded as material, leaving open only the question whether an omitted part is supplied by an equivalent device or instrumentality." *Id.* at 420-21, 3 S. Ct. at 244-45 (emphasis added). Although *Fay* does not recite the words "prosecution history estoppel," its legal standard has been repeatedly reaffirmed by the Supreme Court, through *Warner-Jenkinson*, as governing the application of prosecution history estoppel. *See Warner-Jenkinson*, 520 U.S. at 32, 117 S. Ct. at 1050 (quoting *Hubbell v. United States*, 179 U.S. 77, 82, 21 S. Ct. 24, 26 (1900), which in turn quotes *Fay*). *Fay*, as subsequently recognized by *Warner-Jenkinson*, clearly indicates that, despite having amended his claims through the reissuance process, the inventor would still be able to assert his claims against other devices that were more closely equivalent to his invention. *Fay*'s legal standard would be meaningless if the Court had intended to disallow equivalents for amended claims.

2. *Shepard v. Carrigan*

In *Shepard v. Carrigan*, 116 U.S. 593, 6 S. Ct. 493 (1886), the Court considered whether a skirt protector lacking a "fluted or plaited band or border" infringed a claim that had been amended to include such a limitation. The Court stated that its previous holding in *Fay*, 109 U.S. at 420-21, 3 S. Ct. at 244-45, was "decisive of the present case," 116 U.S. at 598, 6 S. Ct. at 495, and thus that the proper inquiry was "'whether an omitted part is supplied by an equivalent device or instrumentality.'" *Id.* (quoting *Fay*, 109 U.S. at 420-21, 3 S. Ct. at 244-45) (emphasis added). Despite ruling that the patentee had

"explicitly abandoned" claims to an unplaited skirt protector, the Court's legal standard clearly contemplates that other skirt protectors could be found to constitute "an equivalent device or instrumentality" of the invention claimed in the reissue patent. *Id.* Again, the legal standard governing *Shepard* is repeated, verbatim, in *Warner-Jenkinson*. *See Warner-Jenkinson*, 520 U.S. at 32, 117 S. Ct. at 1050. Although the *Shepard* Court did not use the phrase "prosecution history estoppel" to describe the limit on equivalents it applied, the Supreme Court subsequently interpreted *Shepard* as invoking such an estoppel. *See Exhibit Supply*, 315 U.S. at 128, 62 S. Ct. at 515 (citing *Shepard* as basis of doctrine of file wrapper estoppel).

3. *Sutter v. Robinson*

In *Sutter v. Robinson*, 119 U.S. 530, 7 S. Ct. 376 (1886), the patentee claimed an apparatus for "resweating" tobacco. During prosecution, the applicant amended his claims to avoid the prior art, stating that the inventive aspect was the use of a wooden, rather than metal, vessel for the tobacco. The Court stated that "the ultimate question" in the case was "whether, in such an apparatus, the use of the cases, or boxes, or packages, in which the tobacco leaves are originally packed by the producer is equivalent to the wooden tobacco-holder mentioned in the complainants' specification." *Id.* at 542, 7 S. Ct. at 382 (emphasis added). Although the Court found that the accused device could not infringe the patent in light of the applicant's amendment, the Court's "ultimate question" clearly contemplates that other devices, although not exact copies of the patented invention, might have infringed the amended aspect of the claim under the doctrine of equivalents. This "ultimate question," of course, would be irrelevant if the Court intended a complete bar to govern equivalency disputes involving amended claims. The *Warner-Jenkinson* Court cites *Sutter* as a proper application of the doctrine of prosecution history estoppel. *See Warner-Jenkinson*, 520 U.S. at 17 n. 5, 117 S. Ct. at 1050 n. 5 (noting that in *Sutter*, "estoppel applied where, during patent prosecution, the applicant 'was expressly

required to state that [the device's] structural plan was old and not of his invention'").

4. *Phoenix Caster Co. v. Spiegel*

Phoenix Caster Co. v. Spiegel, 133 U.S. 360, 10 S. Ct. 409 (1890), concerns claims to a furniture caster. The claims had been repeatedly narrowed during prosecution to a caster containing an elliptical housing opening, a collar, and a rocker-formed collar bearing. The Court ruled that the accused device "is not of a construction similar to" the patented invention, and that the accused device did not contain "any equivalent for such 'rocker-formed collar bearing,'" and thus that there was no infringement. *Id.* at 369, 10 S. Ct. at 412 (emphasis added). The Court did not foreclose application of the doctrine of equivalents in light of the patentee's multiple narrowing amendments, but still inquired whether the accused device was "similar to" or an "equivalent for" the claimed invention. *Id.* Although the majority suggests that *Phoenix* does not involve prosecution history estoppel, the Supreme Court subsequently cited *Phoenix* as supporting the proposition at the heart of prosecution history estoppel that "[i]t is a rule of patent construction consistently observed that a claim in a patent as allowed must be read and interpreted with reference to claims that have been cancelled or rejected and the claims allowed cannot by construction be read to cover what was thus eliminated from the patent." *Schriber-Schroth Co. v. Cleveland Trust Co.*, 311 U.S. 211, 220-21, 61 S. Ct. 235, 239 (1940).

5. *Royer v. Coupe*

In *Royer v. Coupe*, 146 U.S. 524, 13 S. Ct. 166 (1892), the circuit court held that in light of the patentee's multiple limiting amendments, his claims were restricted to the eight-step process described in the specification, and that to find an infringement of the process, "'a person must be shown to have followed substantially the same process, the same mode of reaching the result as is described in the specifications.'" *Id.* at 530-31, 13 S. Ct. at 169 (quoting *Royer v. Manufacturing Co.*,

20 F. 853, 854, 856 (C.C. .Ill. 1884)) (emphasis added). The Supreme Court fully endorsed this approach to limiting the application of the doctrine of equivalents, holding that "[w]e are of opinion that the views set forth by the circuit court are sound, and that the decree must be affirmed." *Id.* *Royer* thus confirms that a patentee with an amended claim may still assert his rights against those utilizing "substantially the same process" as the claimed invention. *Id.* Although the phrase "prosecution history estoppel" is nowhere found in *Royer*, the Supreme Court subsequently interpreted *Royer* as invoking such an estoppel. *See Keystone Driller Co. v. Northwest Engineering Corp.*, 294 U.S. 42, 48, 55 S. Ct. 262, 265 (1935) (citing *Royer* to argue that "[w]here such broad claims are denied and a narrower substituted, the patentee is estopped to read the granted claim as the equivalent of those which were rejected").

6. *Hubbell v. United States*

In *Hubbell v. United States*, 179 U.S. 77, 21 S. Ct. 24 (1900), the patentee had repeatedly amended his claims to a bullet cartridge. As the majority notes, the Court recognized that these amendments "must be strictly construed against the inventor and in favor of the public, and looked upon in the nature of disclaimers." *Id.* at 83-84, 21 S. Ct. at 27. The Court, however, nowhere suggested that these amendments foreclosed the patentee from all protection against equivalents. To the contrary, the Court asked whether the accused device contained the limitation at issue, or, if it did not, "'whether [the] omitted part is supplied by an *equivalent device or instrumentality.*'" *Id.* at 82, 21 S. Ct. at 26 (quoting *Fay v. Cordesman*, 109 U.S. 408, 3 S. Ct. 236 (1883)) (emphasis added). The Court recognized that, although the claims had been amended, the patentee was still "entitled to a fair construction of the terms of his claim as actually granted." *Id.* at 80, 21 S. Ct. at 25. To me, this reference to "fair construction" can only be a reference to the doctrine of equivalents, as the Court recognized that the patentee retained the right to prohibit infringement by "an

equivalent device or instrumentality." As noted above, *Hubbell*'s legal standard is quoted verbatim in *Warner-Jenkinson*, 520 U.S. at 32, 117 S. Ct. at 1050.

Although the majority suggests that the *Hubbell* Court did not "discuss [ ] prosecution history estoppel," the Supreme Court has indeed interpreted *Hubbell* as an application of prosecution history estoppel. *See Warner-Jenkinson*, 520 U.S. at 31 n. 5, 117 S. Ct. at 1050 n. 5 (citing *Hubbell* as holding that "patentee estopped from excluding a claim element where element was added to overcome objections based on lack of novelty over prior patents"). I do not agree with the majority that the absence of the words "prosecution history estoppel" in *Hubbell* and in the other cases discussed above somehow means that the Supreme Court "did not discuss the issue presented in En Banc Question 3." Rather, I believe that the Supreme Court has repeatedly set forth a legal standard that preserves the right of patentees to assert equivalents for amended claim limitations.

D. *Warner-Jenkinson* Reaffirms Earlier Supreme Court Precedent.

The Supreme Court's most recent decision regarding prosecution history estoppel is remarkable for the extent to which it reaffirms earlier precedent and affirmatively supports the application of flexible estoppel. *See Warner-Jenkinson*, 520 U.S. at 17, 117 S. Ct. at 1040. In analyzing whether prosecution history estoppel precludes a finding that an accused product infringes an amended patent claim under the doctrine of equivalents, the Court said that courts may determine "the reason for" and the "manner" of the amendment. *Id.* at 33 n. 7, 117 S. Ct. at 1051 n. 7. Such an analysis would be unnecessary, of course, if the Court intended a complete bar. *See* 5 Donald S. Chisum, *Chisum on Patents*, § 18.05[3][c], at 18-509 ("Reference to the 'manner' of the amendment hints that a court may indeed consider whether an amendment leaves some room for equivalents of the limitation added."). The Court assumes that the PTO may have relied "upon a flexible

rule of estoppel" when evaluating patent applications, and that if so it would be improper "to upset the basic assumptions of the PTO." *Warner-Jenkinson*, 520 U.S. at 32, 117 S. Ct. at 1050. As Professor Chisum has stated, to read *Warner-Jenkinson* "as precluding all equivalency for a claim element added by an amendment driven by the prior art [would be] contrary to the Supreme Court's *rejection of a 'rigid' estoppel approach*." Donald S. Chisum, *The Scope of Protection for Patents After the Supreme Court's Warner-Jenkinson Decision: The Fair Protection-Certainty Conundrum*, 14 Computer & High Tech. L. J. 1, 57 (1998) (emphasis added).

Warner-Jenkinson, however, did establish a special presumption for cases where the prosecution history reveals no reason for a narrowing amendment. In these limited circumstances, the Court held that a presumption applies that the amendment was made for a reason related to patentability, and that if the patentee is later unable to rebut that presumption, a bar to equivalents applies to the claim limitation added by the amendment. *See Warner- Jenkinson*, 520 U.S. at 33, 117 S. Ct. at 1051. Although the Court's holding does not explicitly resolve whether a bar would apply outside of the factual circumstances of that case, nothing in the opinion suggests that the Court intended to so limit the doctrine of equivalents.

That the Court's holding in *Warner-Jenkinson* is indeed narrow, and not intended to upset the established law of estoppel, is underscored by its extensive reliance on precedent dating back to 1886. In declining the invitation to alter existing rules, the *Warner-Jenkinson* Court relied on older Supreme Court decisions such as *Exhibit Supply Co. v. Ace Patents Corp.*, 315 U.S. 126, 62 S. Ct. 513 (1942), *Keystone Driller Co. v. Northwest Engineering Corp.*, 294 U.S. 42, 55 S. Ct. 262 (1935), *Smith v. Magic City Kennel Club, Inc.*, 282 U.S. 784, 788, 51 S. Ct. 291, 293 (1931), *Computing Scale Co. of America v. Automatic Scale Co.*, 204 U.S. 609, 618-20, 27 S. Ct. 307 (1907), *Hubbell v. United States*, 179 U.S. 77, 83, 21 S. Ct. 24, 26-27 (1900), and *Sutter v. Robinson*, 119 U.S. 530,

541, 7 S. Ct. 376, 381-82 (1886). The Court's reliance on its earlier cases and its description of the methodology adopted in each of those cases indicate that the *Warner- Jenkinson* Court did not intend to overrule or change this well-established precedent; indeed, by citing to these cases, the *Warner-Jenkinson* Court endorsed their approach. Further, many of the cases cited in *Warner- Jenkinson* themselves rely on the cases I discuss above which, I believe, declare a flexible bar. *See, e.g., Hubbell*, 179 U.S. at 82, 21 S. Ct. at 26 (citing *Fay v. Cordesman*, 109 U.S. 408, 3 S. Ct. 236 (1883)); *Keystone Driller*, 294 U.S. at 48, 55 S. Ct. at 265 (citing *Royer v. Coupe*, 146 U.S. 524, 13 S. Ct. 166 (1892)); *Exhibit Supply*, 315 U.S. at 136, 62 S. Ct. at 518 (citing *Goodyear*, 102 U.S. at 228 (1880)). The *Warner-Jenkinson* Court clearly endorsed the methodology applied in this pedigree of earlier Supreme Court cases spanning back to the nineteenth century. I believe that *Warner-Jenkinson* reaffirms the principles the Court set forth in *Goodyear* and *Hurlbut*, and underscores that these nine cases remain binding on this court today.

III. Federal Circuit Authority

As noted above, I recognize that today's en banc court has the authority to overrule prior decisions of this court, and thus that our prior decisions applying flexible or measured estoppel are not binding on the en banc court. I present the following review of our case law, however, to highlight the magnitude of today's sudden shift, and to suggest that the approach of today's majority is contrary to any notion that judge-made law should evolve in a consistent, gradual, and predictable fashion.

A. Our Adoption of Flexible Estoppel in 1983 Established the Only True "Line of Authority" in This Circuit.

Consistent with *Goodyear*, *Hurlbut*, and the other Supreme Court cases reviewed above, this court has held in over fifty decisions that the scope of estoppel is measured by the scope of surrender. In *Hughes Aircraft Co. v. United States*, 717 F.2d 1351, 219 U.S.P.Q. 473 (Fed. Cir. 1983) (*Markey*, Davis,

Baldwin)[14] ("*Hughes I*"), this court rejected a "wooden application of estoppel," and held that the application of prosecution history estoppel does not strip a patentee of all resort to the doctrine of equivalents. *Id.* The court stated:

> Depending on the nature and purpose of an amendment, it may have a limiting effect within a spectrum ranging from great to small to zero. The effect may or may not be fatal to application of a range of equivalents broad enough to encompass a particular accused product. It is *not fatal to application of the doctrine itself.*

Id. (emphasis added).

Today's majority, however, suggests that since *Hughes I*, this court has established two "lines of authority" adopting "inconsistent" views on the scope of prosecution history estoppel: one school originating with *Hughes I* favoring flexible estoppel; and a second school originating with *Kinzenbaw v. Deere & Co.*, 741 F.2d 383, 222 U.S.P.Q. 929 (Fed. Cir. 1984) (*Friedman*, Markey, Rich, Davis, Baldwin), favoring a complete bar. I disagree with that assessment. In my opinion, there is only one "line of authority." While the majority correctly notes that Professor Chisum opines that there are "two lines of authority," it neglects to mention that the second "line" consists of only two cases. *See* Chisum, *supra*, § 18.05[3][b][i], at 18-496 ("*Two* Federal Circuit panel decisions articulated the strict approach to estoppel.") (emphasis added). *Kinzenbaw and Prodyne Enterprises, Inc. v. Julie Pomerantz*, 743 F.2d 1581, 223 U.S.P.Q. 477 (Fed. Cir. 1984) (*Rich*, Friedman, Cowen), however, do not hold that the mere fact of amendment triggers a complete estoppel; they simply stand for the rule that courts will not undertake a "speculative inquiry" into whether a claim amendment was

[14] The Underline name refers to the opinion's author.

necessary. *Kinzenbaw*, 741 F.2d at 389, 222 U.S.P.Q. at 933; *Prodyne*, 743 F.2d at 1583, 223 U.S.P.Q. at 478.

It is true that *Kinzenbaw* and *Prodyne* contain language which, taken alone, is arguably consistent with the complete bar imposed by the court today. On its face, however, neither opinion departs from our seminal ruling only the year before in *Hughes I*. In fact, each opinion purports to follow and quotes *Hughes I*. *See Kinzenbaw*, 741 F.2d at 389, 222 U.S.P.Q. at 933 ("An applicant for patent . . . is not required to predict all future developments which enable the practice of his invention in substantially the same way.") (quoting *Hughes I*, 717 F.2d at 1362, 219 U.S.P.Q. at 481); *Prodyne*, 743 F.2d at 1583, 223 U.S.P.Q. at 478 ("The doctrine of prosecution history estoppel precludes a patent owner from obtaining a claim construction that would resurrect subject matter surrendered during the prosecution of his patent application.") (quoting *Hughes I*, 717 F.2d at 1362, 219 U.S.P.Q. at 481).

Further, a close reading of the opinion in each case shows that rather than substituting a complete bar for flexible estoppel based on actual surrender, the panels did indeed look to the exact scope of surrender. They simply found that the surrender covered the accused subject matter. *See Kinzenbaw*, 741 F.2d at 389, 222 U.S.P.Q. at 933 ("Instead, [the accused infringer] adopted the very element that [the patentee] had eliminated for the stated purpose of avoiding the examiner's rejection and obtaining the patent."); *Prodyne*, 743 F.2d at 1583, 223 U.S.P.Q. at 478 ("Prodyne is estopped from now broadening the description of a claim element limited during prosecution so as to encompass a structure which a competitor should reasonably be entitled to believe is not within the legal boundaries of the patent claims in suit."). In light of the holdings of these two cases, apart from the language the majority relies on, I cannot agree with my colleagues that we have established two conflicting lines of authority regarding prosecution history estoppel.

B. This Court's Original Interpretation of *Warner-Jenkinson* Was Sound, and the Majority Has Not Explained Why We Should Overrule Our Earlier Cases.

This court has issued a series of decisions since *Warner-Jenkinson* in which we have consistently interpreted Supreme Court law to require flexible estoppel. Today's majority, however, fails to provide a satisfactory explanation as to why we should overrule our earlier cases. In *Litton Sys., Inc. v. Honeywell, Inc.*, 140 F.3d 1449, 46 U.S.P.Q.2d 1321 (Fed. Cir. 1998) (*Rader*, Newman, Bryson), one of the three cases remanded to us in light of the Supreme Court's ruling in *Warner-Jenkinson*, this court, in 1998, most emphatically adhered to the "longstanding doctrine that an estoppel only bars recapture of that subject matter actually surrendered during prosecution." *Litton*, 140 F.3d at 1455, 46 U.S.P.Q.2d at 1325. Our court clearly stated that "the application of prosecution history estoppel does not necessarily limit a patentee to the literal language of the amended element—even when an amendment has been made to overcome the prior art." *Id.* We reasoned that the *Warner-Jenkinson* Court did not intend to "change so substantially the rules of the game" concerning the scope of estoppel. *Id.* at 1457, 46 U.S.P.Q.2d at 1326 (citation omitted). We further noted that "the entire context of the *Warner-Jenkinson* opinion shows that the Supreme Court approved the PTO's practice of requesting amendments with the understanding that the doctrine of equivalents would still apply to the amended language." *Id.* at 1456-57, 46 U.S.P.Q.2d at 1326.

Similarly, in *Hughes Aircraft Co. v. United States*, 140 F.3d 1470, 46 U.S.P.Q.2d 1285 (Fed. Cir. 1998) (*Archer*, Rader, Bryson) ("*Hughes II*"), issued the same day as *Litton*, a different panel of this court indicated that "the key to prosecution history estoppel is the surrender or disclaimer of the subject matter by the patentee, which the patentee is then unable to reclaim through the doctrine of equivalents." *Id.* at

1476, 46 U.S.P.Q.2d at 1290 (referring to *Exhibit Supply*, 315 U.S. at 136, 62 S. Ct. at 518-19; *Sutter*, 119 U.S. at 541, 7 S. Ct. at 381-82). While amendments "serve to narrow the range of equivalents," not all equivalents are precluded. *Id.* We interpreted *Warner-Jenkinson* as supporting the proposition that courts may inquire into the reason for an amendment in order to "determine what subject matter the patentee actually surrendered." *Hughes II*, 140 F.3d at 1470, 46 U.S.P.Q.2d at 1290 (citing *Warner-Jenkinson* 520 U.S. at 33 n. 7, 117 S. Ct. at 1051 n. 7).

Indeed, the very same year, in *Cybor Corp. v. FAS Tech., Inc.*, 138 F.3d 1448, 46 U.S.P.Q.2d 1169 (Fed. Cir. 1998) (en banc) (*Archer*), our court, sitting en banc, stated that "[t]he relevant inquiry is whether a competitor would reasonably believe that the applicant had surrendered the relevant subject matter." *Id.* at 1457, 46 U.S.P.Q.2d at 1178. I fail to see how the majority will stabilize application of the doctrine of equivalents by overruling an en banc decision that is only two years old.

Only last year, in *Sextant Avionique, S.A. v. Analog Devices*, 172 F.3d 817, 49 U.S.P.Q.2d 1865 (Fed. Cir. 1999) (*Lourie*, Smith, Gajarsa), this court followed Supreme Court guidance in determining the novel question whether the *Warner-Jenkinson* presumption of a complete bar applies to both explained and unexplained amendments. *See id.* at 832, 49 U.S.P.Q.2d at 1875. The *Sextant* court looked to the policies "foster[ed]" in *Warner-Jenkinson* to guide its reasoning. *See id.* at 831, 49 U.S.P.Q.2d at 1875. The court noted that the *Warner-Jenkinson* Court created the presumption of a bar because "claims . . . serve both a definitional and public notice function." *See id.* (citing *Warner-Jenkinson*, 520 U.S. at 33-35, 117 S. Ct. at 1051). The court noted:

> This policy of "public notice" is heavily implicated in the circumstance in which the presumption is operative because, by definition, it is unclear to one reading the

> prosecution history why a particular amendment was made. Accordingly, the Court, through the operation of the presumption, placed the burden on the patentee to clarify his reasons. The patentee's failure to so clarify and thereby rebut the presumption should not work to the detriment of the public by allowing an uncertain range of equivalency to remain as to the limitation at issue.

Id. at 832, 49 U.S.P.Q.2d at 1875. The panel concluded that a complete bar applies when the *Warner-Jenkinson* presumption arises and remains unrebutted. *See id.* ("Unguided by the prosecution history, the prior art, applicant's argument during prosecution, and sufficient evidence in rebuttal to the presumption, we have no way to set reasonable limits on how far beyond the literal scope of the term . . . the estoppel will allow the doctrine of equivalents to reach."). The court stated that under *Warner-Jenkinson*, courts must apply "a different rule of scope" when an amendment is un explained. *Id.* at 831, 49 U.S.P.Q.2d at 1874 (emphasis added). In the circumstance of an explained amendment, however, the *Sextant* court explicitly followed Supreme Court and Federal Circuit precedent in allowing the patentee a scope of protection from infringement by equivalents. *See id.* at 831, 49 U.S.P.Q.2d at 1874 (citing *Keystone Driller Co.*, 294 U.S. at 47- 48, 55 S. Ct. 262, and *Magic City*, 282 U.S. at 788-90, 51 S. Ct. at 291). The *Sextant* court noted that "Supreme Court case law predating *Warner-Jenkinson* embraced the concept of scope in the context of amendments made to avoid prior art." *Id.*

In my opinion, today's majority has not set forth a credible explanation as to why it is overruling our prior case law interpreting *Warner-Jenkinson*. The majority merely asserts, citing only "our long experience with the flexible bar approach," that the standard we have applied until now is "unworkable." I feel that we owe greater deference to our past

interpretations of Supreme Court law, or a better explanation of why our case law is suddenly seen as "unworkable."

C. From 1983 to 2000, This Court Has Consistently Applied Flexible, or Measured, Estoppel.

Panels of this court have consistently followed *Hughes I* and flexible estoppel. Indeed, in a parade of cases, from each year of this court's eighteen-year history, successive and randomly-selected panels of this court have unanimously applied the flexible bar rule, and done so without mention of its newly-discovered "unworkability." As the list below indicates, our court has embraced flexible estoppel in more than fifty cases. Ironically, these cases were decided by panels including nearly every member of today's majority. In fact, most of the members of today's majority have written an opinion, and indeed have done so since *Warner-Jenkinson*, supporting flexible preclusion.

To highlight the degree by which today's majority departs from our settled law, I have provided the following list of cases that today's ruling overturns.

Federal Circuit Cases Applying Flexible Estoppel: 1983-2000

> 1983: *Hughes Aircraft Co. v. United States*, 717 F.2d 1351, 1362, 219 U.S.P.Q. 473, 481 (Fed. Cir. 1983) (*Markey*, Davis, Baldwin): ("We, as has the Supreme Court, reject the view [that amendment bars all resort to the doctrine of equivalence] as a wooden application of estoppel, negating entirely the doctrine of equivalents and limiting determination of the infringement issue to consideration of literal infringement alone.").
>
> 1984: *Bayer Aktiengesellschaft v. Duphar Int'l Research B.V.*, 738 F.2d 1237, 1243, 222 U.S.P.Q. 649, 653 (Fed. Cir. 1984) (*Kashiwa*, Cowen, Bennett) ("[W]henever the doctrine of

file history estoppel is invoked, a close examination must be made as to, not only what was surrendered, but also the reason for such a surrender. The fact that claims were narrowed does not always mean that the doctrine of file history estoppel completely prohibits a patentee from recapturing some of what was originally claimed.").

1985: *Loctite Corp. v. Ultraseal Ltd.*, 781 F.2d 861, 871, 228 U.S.P.Q. 90, 96 (Fed. Cir. 1985) (*Baldwin*, Davis, Kashiwa).

1986: *Mannesmann Demag Corp. v. Engineered Metal Prod. Co., Inc.*, 793 F.2d 1279, 1284, 230 U.S.P.Q. 45, 48 (Fed. Cir. 1986) (*Newman*, Baldwin, Cowen) ("Amendment of claims during patent prosecution does not necessarily bar all benefit of the doctrine of equivalents."); *Great Northern Corp. v. Davis Core & Pad Co., Inc.*, 782 F.2d 159, 166, 228 U.S.P.Q. 356, 359-60 (Fed. Cir. 1986) (*Rich*, Markey, Kashiwa); *Moeller v. Ionetics, Inc.*, 794 F.2d 653, 659, 229 U.S.P.Q. 992, 996 (Fed. Cir. 1986) (*Nichols*, Friedman, Smith); *Chemical Eng'g Corp. v. Essef Indus., Inc.*, 795 F.2d 1565, 1573 n. 8, 230 U.S.P.Q. 385, 391 n. 8 (Fed. Cir. 1986) (*Markey*, Rich, Baldwin).

1987: *Townsend Eng'g Co. v. Hitec Co., Ltd.*, 829 F.2d 1086, 1090, 4 U.S.P.Q.2d 1136, 1139 (Fed. Cir. 1987) (*Friedman*, Baldwin, Newman); *Tandon Corp. v. United States Int'l Trade Comm'n*, 831 F.2d 1017, 1026, 4 U.S.P.Q.2d 1283, 1290 (Fed. Cir. 1987) (*Newman*, Friedman, Archer); *Pennwalt Corp. v. Durand-Wayland, Inc.*, 833 F.2d 931, 939 n.

2, 4 U.S.P.Q.2d 1737, 1743 n. 2 (Fed. Cir. 1987) (en banc).

1988: *Hi-Life Prod., Inc. v. American Nat'l Water-Mattress Corp.*, 842 F.2d 323, 325, 6 U.S.P.Q.2d 1132, 1134 (Fed. Cir. 1988) (*Bissell*, Markey, Davis); *Water Techs. Corp. v. Calco, Ltd.*, 850 F.2d 660, 667, 7 U.S.P.Q.2d 1097, 1102 (Fed. Cir. 1988) (*Nies*, Archer, Skelton); *Diversitech Corp. v. Century Steps, Inc.*, 850 F.2d 675, 681, 7 U.S.P.Q.2d 1315, 1320 (Fed. Cir. 1988) (*Newman*, Davis, Archer).

1989: *LaBounty Mfg., Inc. v. United States Int'l Trade Comm'n*, 867 F.2d 1572, 1576, 9 U.S.P.Q.2d 1995, 1999 (Fed. Cir. 1989) (per curiam) (*Nies*, Bissell, Archer) ("[T]he breadth of the amendment does not necessarily equate with the breadth of the resulting estoppel."); *Sun Studs, Inc. v. ATA Equip. Leasing, Inc.*, 872 F.2d 978, 987, 10 U.S.P.Q.2d 1338, 1345 (Fed. Cir. 1989) (*Newman*, Friedman, Bennett) ("The scope of estoppel must be determined in light of the prior art that occasioned the change, as well as representations made to the patent examiner as to the reason for the change."); *Environmental Instruments, Inc. v. Sutron Corp.*, 877 F.2d 1561, 1566, 11 U.S.P.Q.2d 1132, 1136 (Fed. Cir. 1989) (*Rich*, Nies, Michel); *Black & Decker, Inc. v. Hoover Serv. Ctr.*, 886 F.2d 1285, 1295, 12 U.S.P.Q.2d 1250, 1258 (Fed. Cir. 1989) (*Markey*, Newman, Archer).

1990: *Jonsson v. Stanley Works*, 903 F.2d 812, 817, 14 U.S.P.Q.2d 1863, 1868 (Fed. Cir. 1990) (*Re*, Markey, Newman); *Hormone Research Found., Inc. v. Genentech, Inc.*, 904 F.2d 1558,

1564, 15 U.S.P.Q.2d 1039, 1044 (Fed. Cir. 1990) (*Archer*, Cowen, Michel); *Insta-Foam Prods., Inc. v. Universal Foam Sys., Inc.*, 906 F.2d 698, 703, 15 U.S.P.Q.2d 1295, 1298 (Fed. Cir. 1990) (*Archer*, Mayer, Skelton).

1991: *Dixie USA, Inc. v. Infab Corp.*, 927 F.2d 584, 588, 17 U.S.P.Q.2d 1968, 1970-71 (Fed. Cir. 1991) (*Lourie*, Mayer, Friedman) ("Appellants argue that they should be able to obtain some degree of equivalence even in the face of prosecution history estoppel, and that a total preclusion of equivalence should not apply. As a general proposition, that principle is correct . . ."); *Vaupel Textilmaschinen KG v. Meccanica Euro Italia S.P.A.*, 944 F.2d 870, 882, 20 U.S.P.Q.2d 1045, 1054 (Fed. Cir. 1991) (*Lourie*, Newman, Rader); *Laitram Corp. v. NEC Corp.*, 952 F.2d 1357, 1361, 21 U.S.P.Q.2d 1276, 1279- 80 (Fed. Cir. 1991) (*Newman*, Archer, Rader).

1992: *Charles Greiner & Co., Inc. v. Mari-Med Mfg., Inc.*, 962 F.2d 1031, 1036, 22 U.S.P.Q.2d 1526, 1530 (Fed. Cir. 1992) (*Rader*, Plager, Smith).

1993: *Texas Instruments, Inc. v. United States Int'l Trade Comm'n*, 988 F.2d 1165, 1174, 26 U.S.P.Q.2d 1018, 1025 (Fed. Cir. 1993) (*Clevenger*, Nies, Kaufman) ("Application of this test [to determine whether the patentee may assert the doctrine of equivalents,] requires, in each case, examination of the prosecution history taken as a whole."); *Wang Labs., Inc. v. Toshiba Corp.*, 993 F.2d 858, 26 U.S.P.Q.2d 1767 (Fed. Cir. 1993) (*Lourie*, Archer, Clevenger); *Hoganas AB v. Dresser Indus., Inc.*, 9 F.3d 948, 951, 28 U.S.P.Q.2d 1936, 1939 (Fed. Cir. 1993) (*Plager*, Smith, Clevenger).

1994: *Genentech, Inc. v. Wellcome Found. Ltd.*, 29 F.3d 1555, 1567, 31 U.S.P.Q.2d 1161, 1170 (Fed. Cir. 1994) (*Plager*, Cowen, Lourie).

1995: *Southwall Techs., Inc. v. Cardinal IG Co.*, 54 F.3d 1570, 1579, 34 U.S.P.Q.2d 1673, 1676 (Fed. Cir. 1995) (*Michel*, Lourie, Bryson); *Pall Corp. v. Micron Separations, Inc.*, 66 F.3d 1211, 1219, 36 U.S.P.Q.2d 1225, 1230 (Fed. Cir. 1995) (*Newman*, Rich, Mayer).

1996: *Modine Mfg., Co. v. United States Int'l Trade Comm'n*, 75 F.3d 1545, 1556, 37 U.S.P.Q.2d 1609, 1616 (Fed. Cir. 1996) (*Newman*, Mayer, Clevenger); *Athletic Alternatives, Inc. v. Prince Mfg., Inc.*, 73 F.3d 1573, 1582, 37 U.S.P.Q.2d 1365, 1373 (*Michel*, Nies, Clevenger); *Insituform Tech., Inc. v. Cat Contracting, Inc.*, 99 F.3d 1098, 1101, 40 U.S.P.Q.2d 1602, 1609 (Fed. Cir. 1996) (*Michel*, Archer, Schall).

1997: *Hilton Davis Chem. Co. v. Warner-Jenkinson Co., Inc.*, 62 F.3d 1512, 1525, 35 U.S.P.Q.2d 1641, 1651 (Fed. Cir. 1995) (per curiam); *Wang Labs., Inc. v. Mitsubishi Elecs. Amer., Inc.*, 103 F.3d 1571, 1578, 41 U.S.P.Q.2d 1263, 1269 (Fed. Cir. 1997) (*Rich*, Mayer, Schall); *Lockwood v. American Airlines, Inc.*, 107 F.3d 1565, 1574-75, 41 U.S.P.Q.2d 1961, 1968 (Fed. Cir. 1997) (*Lourie*, Mayer, Rader).

1998: *Cybor Corp. v. FAS Tech., Inc.*, 138 F.3d 1448, 1460, 46 U.S.P.Q.2d 1169, 1178 (Fed. Cir. 1998) (en banc) (*Archer*); *Litton Sys., Inc. v. Honeywell, Inc.*, 140 F.3d 1449, 1455, 46

U.S.P.Q.2d 1321, 1326 (Fed. Cir. 1998) (*Rader*, Newman, Bryson) ("In accord with the Supreme Court's understanding, this court has repeatedly stated that application of prosecution history estoppel does not necessarily limit a patentee to the literal language of the amended element—even when an amendment has been made to overcome the prior art."); *Hughes Aircraft Co. v. United States*, 140 F.3d 1470, 1476, 46 U.S.P.Q.2d 1285, 1290 (Fed. Cir. 1998) (*Archer*, Rader, Bryson) ("[T]he key to prosecution history estoppel is the surrender or disclaimer of subject matter by the patentee, which the patentee is then unable to reclaim through the doctrine of equivalents . . .. In evaluating the reason behind an amendment, a court must 'determine what subject matter the patentee actually surrendered.'"); *Laitram Corp. v. Morehouse Indus., Inc.*, 143 F.3d 1456, 1464, 46 U.S.P.Q.2d 1609, 1615-16 (Fed. Cir. 1998) (Lourie, Michel, Skelton); *EMI Group North Amer. Inc. v. Intel Corp.*, 157 F.3d 887, 897, 48 U.S.P.Q.2d 1181, 1189 (Fed. Cir. 1998) (*Newman*, Plager, Bryson) ("Cancellation of a claim that is written broadly does not always generate an estoppel to narrower subject matter. The particular facts must be considered."); *Desper Prod., Inc. v. QSound Labs, Inc.*, 157 F.3d 1325, 1338, 48 U.S.P.Q.2d 1088, 1098 (Fed. Cir. 1998) (*Plager*, Clevenger, Gajarsa); *Bai v. L & L Wings, Inc.*, 160 F.3d 1350, 1356, 48 U.S.P.Q.2d 1674, 1679 (Fed. Cir. 1998) (*Lourie*, Rich, Rader); *Insituform Tech., Inc. v. Cat Contracting, Inc.*, 161 F.3d 688, 692, 48 U.S.P.Q.2d 1610, 1614 (Fed. Cir. 1998) (*Michel*, Archer, Schall).

1999: *Pharmacia & Upjohn Co. v. Mylan Pharms., Inc.*, 170 F.3d 1373, 1377, 50 U.S.P.Q.2d 1033, 1037 (Fed. Cir. 1999) (*Lourie*, Newman, Schall); *Sextant Avionique, S.A. v. Analog Devices, Inc.*, 172 F.3d 817, 830-32, 49 U.S.P.Q.2d 1865, 1870-72 (Fed. Cir. 1999) (*Lourie*, Smith, Gajarsa); *Augustine Med. Inc. v. Gaymar Indus., Inc.*, 181 F.3d 1291, 1298, 50 U.S.P.Q.2d 1900, 1905 (Fed. Cir. 1999) (*Mayer*, Rader, Gajarsa); *Loral Fairchild Corp. v. Sony Corp.*, 181 F.3d 1313, 1323, 50 U.S.P.Q.2d 1865, 1871 (Fed. Cir. 1999) (*Archer*, Michel, Plager); *Merck & Co. v. Mylan Pharms. Inc.*, 190 F.3d 1335, 1341, 51 U.S.P.Q.2d 1954, 1958 (Fed. Cir. 1999) (*Newman*, Lourie, Clevenger); *K-2 Corp. v. Salomon S.A.*, 191 F.3d 1356,1368, 52 U.S.P.Q.2d 1001, 1008 (Fed. Cir. 1999) (*Clevenger*, Rader, Gajarsa) (In order to prevent infringers from "stealing the benefits of an invention, . . . the doctrine of equivalents must . . . remain within the boundaries established by the prior art, the scope of the patent claims themselves, and any surrendered subject matter.").

2000: *Bayer AG v. Elan Pharm. Research Corp.*, 212 F.3d 1241, 1251, 54 U.S.P.Q.2d 1711, 1717 (Fed. Cir. 2000) (*Schall*, Clevenger, Bryson); *KCJ Corp. v. Kinetic Concepts, Inc.*, 223 F.3d 1351, 1358, 55 U.S.P.Q.2d 1835, 1842 (Fed. Cir. 2000) (*Rader*, Plager, Clevenger).

IV. The Majority's Rule Likely Will Have Unintended and Adverse Consequences that Undermine the Policies Advanced by the Supreme Court's Interpretation of the Doctrine of Equivalents.

The doctrine of equivalents was created to prevent "fraud on a patent," such as near-literal copying of the claimed invention with the addition of merely insubstantial changes in order to avoid liability for literal infringement. *Graver Tank & Mfg. Co. v. Linde Air Prods. Co.*, 339 U.S. 605, 608, 70 S. Ct. 854, 856 (1950). *Winans v. Denmead*, 56 U.S. 330 (1853), was the first Supreme Court case to address the doctrine of equivalents. In *Winans*, the Court adopted the doctrine in order to prevent precisely the abuse that today's ruling will allow, namely, the appropriation of patented inventions by making trivial modifications to a claimed device. The Court recognized that "the exclusive right to the thing patented is not secured, if the public are at liberty to make substantial copies of it, varying its form or proportions." *Id.* at 343. In *Graver Tank*, the Court reiterated the necessity of the doctrine of equivalents, stating:

> [C]ourts have also recognized that to permit imitation of a patented invention which does not copy every literal detail would be to convert the protection of the patent grant into a hollow and useless thing. Such a limitation would leave room for—indeed *encourage—the unscrupulous copyist to make unimportant and insubstantial changes and substitutions* in the patent which, though adding nothing, would be *enough to take the copied matter outside the claim*, and hence outside the reach of law.

339 U.S. at 607, 70 S. Ct. at 856 (emphasis added).

Despite repeated petitions seeking to abolish the doctrine of equivalents, the Supreme Court has steadfastly ruled that patentees are entitled to its protection. *See Warner-Jenkinson*, 520 U.S. at 21, 117 S. Ct. at 1045 (declining to "speak the death of that doctrine"). As a lower court, we must respect the Supreme Court's decision to accord patentees the benefits of the doctrine of equivalents. I believe that the majority's new rule, far from providing patentees the protections the Supreme Court has guaranteed, unfairly strips most patentees of the right to assert infringement under the doctrine of equivalents.

A. Today's Ruling Provides Copyists with a Fail-Safe Method to Avoid Liability for Infringement.

The majority discusses the unpredictability of prosecution history estoppel under a flexible approach, and how its complete bar "eliminates the public's need to speculate as to the subject matter surrendered by a narrowing claim amendment." As a solution to this problem of the doctrine of equivalents, today's ruling simply denies any resort to the doctrine, for amended claim limitations.

Today's ruling will allow copyists to readily avoid liability despite practicing the substantial equivalent of the claimed invention. Anyone seeking to lawfully copy a patented technology will only have to adopt the following method: (1) read the prosecution history to identify amendments made for patentability reasons; (2) copy every other limitation exactly, but substitute any known interchangeable structure, matter, or step for any limitation that has been amended. Any change, no matter how "unimportant and insubstantial," to even one amended limitation will be sufficient to avoid liability under the majority's rule.

The ease and certainty with which this method can be applied may be readily appreciated with reference to cases such as *Insituform Technologies, Inc. v. Cat Contracting, Inc.*, 99 F.3d 1098, 40 U.S.P.Q.2d 1602 (Fed. Cir. 1996). The asserted patent in *Insituform* claimed a process for impregnating the interior felt repair lining of an underground pipe with resin by using a cup attached over a hole on the outside of the pipe to apply a vacuum downstream of the resin. The resin is thereby made to flow along the interior of the pipe towards the vacuum,

permeating the felt and curing it. *See id.* at 1103, 40 U.S.P.Q.2d at 1605. The patentee had amended the asserted patent claim in response to an examiner's patentability rejection to include the limitation that the vacuum be applied sequentially in a stepwise fashion using a cup that was repeatedly removed from one location along the pipe and moved further downstream once the resin had profused near the original location of the cup. *See id.* at 1104, 40 U.S.P.Q.2d at 1606.

A copyist's first step in exploiting today's ruling to avoid liability, then, would be to identify a claim limitation that was amended for patentability reasons. Here, that is the limitation requiring the successive application of a cup to different locations along the outside of the pipe. The second step, then, would be to determine the most convenient substitute for this limitation. In this case, the copyist could simply apply the vacuum simultaneously using two cups. As we held in *Insituform*, this would be sufficient to avoid literal infringement. 99 F.3d at 1106-07, 40 U.S.P.Q.2d at 1608. And under today's ruling the amended limitation is not entitled to any protection under the doctrine of equivalents, so the copyist will have succeeded in avoiding all liability by simply practicing the claimed invention, but using two cups.

Because today's ruling completely eliminates protection against known substitutes for the amended limitation, any competitor adopting this method would be free from liability, as the amended limitation is not met literally but rather is supplied by an obvious equivalent. To me, protection against such "close copying" is the central office of the doctrine of equivalents. The Supreme Court clearly warned of this danger in *Graver Tank*. *See* 339 U.S. at 607, 70 S. Ct. at 856 ("Outright and forthright duplication is a dull and very rare type of infringement. To prohibit no other would place the inventor at the mercy of verbalism and would be subordinating substance to form. It would deprive him of the benefit of his invention.").

Prosecution history estoppel, moreover, is an equitable doctrine. By its very purpose, equity jurisprudence provides a remedy individually tailored to the circumstances of the dispute at hand. As stated by the Supreme Court:

> The essence of equity jurisdiction has been the power of the Chancellor to do equity and to mould each decree to the necessities of the particular case. *Flexibility rather than rigidity has distinguished it*. The qualities of mercy and practicality have made equity the instrument for nice adjustment and reconciliation between the public interest and private needs as well as between competing private claims.

Hecht Co. v. Bowles, 321 U.S. 321, 329-30, 64 S. Ct. 587, 592 (1944) (emphasis added). Today's ruling, however, imposes a rigid legal rule upon the application of the equitable doctrine of prosecution history estoppel. The complete bar eliminates the flexibility that equity demands. Without this flexibility, courts are precluded from protecting patentees from copyists.

B. The Ability of Copyists to Avoid Liability Under the Complete Bar Will Be Particularly Severe in Certain Types of Technology.

Copyists will be able to apply today's ruling, using the fail-safe method noted above, to avoid liability in many, if not all, areas of technology. Biotechnology is one critical field of technology that may be particularly harmed by today's ruling. Completely barring resort to the doctrine of equivalents for amended claim limitations may drastically limit the scope of protection for biotechnology patents, such as those claiming a protein molecule. *See* Amicus Curiae Brief on behalf of Chiron Corporation in support of Respondent at 16, 17, *Warner-Jenkinson* (No. 95-728).

A protein molecule can only be claimed as the complete and specific sequence of amino acids comprising the protein. *See* 37 C.F.R. § 1.821 (2000). The particular amino acids that

comprise a protein chain are frequently interchangeable with other amino acids without changing the protein or its functions. As our court noted with respect to a patent claiming the protein erythropoietin, "over 3,600 different [protein] analogs can be made by substituting [interchangeable acids] at only a single amino acid position, and over a million different analogs can be made by substituting three amino acids." *Amgen, Inc. v. Chugai Pharm. Co.*, 927 F.2d 1200, 1213, 18 U.S.P.Q.2d 1016, 1026 (Fed. Cir. 1991). Many such analogs are functionally identical to the claimed protein. Thus, a competitor seeking to make, use, or sell a protein that is protected by a patent containing an amended claim limitation will only have to substitute at a particular location in the chain an interchangeable amino acid for the particular amino acid recited in the patent claim as occupying that location. It appears that, in order to thwart such copying, a patent applicant would have to disclose and claim every single analog that is functionally equivalent to the claimed protein. Considering the vast number of specific amino acid sequences that an applicant would be forced to disclose and claim in order to secure meaningful protection for his invention, I feel the majority's rule puts an impossible burden on both the applicant and the PTO.

C. Amending Claims for Patentability Reasons Is a Common Practice That Should Not Trigger a Complete Bar.

The majority gives no hint of the magnitude of the effects that will ensue from its new rule. The vast majority of patent applications contain claims that are initially rejected in view of the prior art, and are only allowed after being amended. Patent prosecution is an iterative process in which the applicant typically submits claims that are thought to be allowable, the examiner rejects the claims in view of the prior art, and the applicant then amends the claims to traverse the examiner's patentability rejections. *See, e.g., Hughes I*, 717 F.2d at 1363, 219 U.S.P.Q. at 481 ("Amendment of claims is a common practice in prosecution of patent applications. No reason or

warrant exists for limiting application of the doctrine of equivalents to those comparatively few claims allowed exactly as originally filed and never amended.").

Today's ruling may prove impractical because it provides that the mere act of amendment to traverse a patentability rejection eliminates all protection under the doctrine of equivalents, even for equivalents that were not the subject of the amendment. This is ill-suited to the iterative process by which patent applications are prosecuted. In *Warner-Jenkinson*, the Supreme Court refused to apply prosecution history estoppel regardless of the reason for amendment expressly because to do so would "subvert the various balances" inherent in the process of rejection followed by amendment. 520 U.S. at 32 n. 6, 117 S. Ct. at 1050 n. 6. In holding that any amendment made for patentability reasons triggers a complete bar to protection under the doctrine of equivalents, today's ruling will "subvert the various balances" inherent in the process of patent prosecution. *Id.*

Rather than acquiesce to patentability rejections and thereby surrender all recourse to the doctrine of equivalents, applicants will be increasingly likely to file administrative and judicial appeals. The PTO Board of Patent Appeals and Interferences is already backlogged and often takes years to decide an appeal. Neither the PTO, nor our court, is prepared to handle any significant increase in such appeals. Such an increase could result in a significant lengthening in the average time and cost required to prosecute an application to issuance.

Furthermore, this court's imposition of a complete bar creates a perverse incentive for patent applicants, particularly those who are financially unable to invoke the appeals process, to simply abandon their applications. In many cases, it may be more effective to protect an invention by maintaining it as a trade secret than by accepting a patent that will publicize the invention, but provide protection only from literal infringement. *See Graver Tank*, 339 U.S. at 607, 70 S. Ct. at 856 ("[Protecting against only literal infringement] would

deprive [the inventor] of the benefit of his invention *and would foster concealment rather than disclosure of inventions, which is one of the primary purposes of the patent system*." (emphasis added)). As a result, the public may be deprived of useful teachings contained in patent applications that are simply abandoned after a rejection is made regarding a critical claim limitation.

D. Today's Ruling Will Significantly, and Unfairly, Reduce the Value of All Unexpired Patents That Were Amended for Patentability Reasons.

The effect of today's ruling upon previously-issued but unexpired patents may be dramatic. While I cannot predict all the consequences that may flow from today's decision, I think it is safe to say that the majority's rule will reduce the effective scope, and thus, the value, of most of the 1,200,000 patents that are unexpired and enforceable. Wholly apart from other long-term effects of the majority's rule, I feel that today's ruling will be unfairly disruptive of existing commercial relations. Today's ruling offers no "grandfathering" provision for the vast numbers of unexpired patents that contain amended claim limitations, and thus that will become increasingly susceptible to copying under today's new rule. Patent applicants who prosecuted their claims under the rule of a flexible bar will have protection limited now by our new rule of complete estoppel. As today's adoption of the complete bar was utterly unpredictable, these applicants had no way to avoid the harm that now befalls them.

I think that today's ruling might most directly impact untold numbers of licensing agreements that are predicated on the assumption that patent claims with an amended limitation are still entitled to a range of equivalents. Licensees will be tempted to exploit today's ruling using the method for liability-free copying discussed above. A licensee could make a minor substitution of a known interchangeable element for an amended claim limitation, and then correctly claim that it is no longer practicing the patented—and licensed—invention. The

licensor would then be powerless to enforce the license because the amended claim or claims simply would not cover the licensee's newly-modified product or process.

As discussed above, the Supreme Court specifically refused in *Warner-Jenkinson* to "upset the basic assumptions" regarding prosecution history estoppel. *See* 520 U.S. at 32, 117 S. Ct. at 1050. I feel that today's ruling will upset basic assumptions regarding the effective scope of patents, and will unfairly disrupt commercial relations based on these assumptions.

V. Conclusion

In the face of over one hundred years of Supreme Court case law, today's en banc majority lacks authority to establish a complete bar rule. The majority also abruptly abandons eighteen years of unvarying Federal Circuit precedent as articulated in over fifty decisions, and does so without showing their error. Moreover, I believe that imposing a complete and automatic bar to the doctrine of equivalents for claim limitations amended for patentability reasons will have adverse, unfair, and unintended consequences. I accordingly must dissent from the majority's answer to Question 3.

RADER, Circuit Judge, concurring-in-part, dissenting-in-part

A primary justification for the doctrine of equivalents is to accommodate after-arising technology. Without a doctrine of equivalents, any claim drafted in current technological terms could be easily circumvented after the advent of an advance in technology. A claim using the terms "anode" and "cathode" from tube technology would lack the "collectors" and "emitters" of transistor technology that emerged in 1948. Thus, without a doctrine of equivalents, infringers in 1949 would have unfettered license to appropriate all patented technology using the out-dated terms "cathode" and "anode". Fortunately, the doctrine of equivalents accommodates that unforeseeable

dilemma for claim drafters. Indeed, in *Warner-Jenkinson Co., Inc. v. Hilton Davis Chemical Co.*, 520 U.S. 17, 37 (1997), the Supreme Court acknowledged the doctrine's role in accommodating after-arising technology.

Unfortunately, by barring all application of the doctrine of equivalents for amended claims, this court does not account at all for the primary role of the doctrine. All patent protection for amended claims is lost when it comes to after-arising technology, while the doctrine of equivalents will continue to accommodate after-arising technology in unamended claims. For a reason far more important than disparate treatment of claims, however, this result defies logic.

Prosecution history estoppel is an estoppel doctrine. Estoppel prevents a litigant from denying an earlier admission upon which another has already relied.* BLACK'S LAW DICTIONARY 570 (7th ed.1999). In the case of patent law, the admission is the applicant's surrender of claim scope to acquire the patent. Today's rule forfeits all protection of the doctrine of equivalents whenever applicants amend their claims, regardless of whether they in fact surrendered coverage. By definition, applicants could not have surrendered something that did not even exist at the time of the claim amendment, namely after-arising technology.

The court reasons today that it will not inquire about the scope of an estoppel because it cannot with certainty ascertain the scope of the applicant's surrender. Although that premise is questionable for the reasons enunciated by Judges Michel and Linn, one thing is beyond question: That premise does not apply to after-arising technology. Because after-arising technology was not in existence during the patent application process, the applicant could not have known of it, let alone

---

* This patent law version of "estoppel" varies from classical estoppel because an accused infringer need not have relied at all on the prior admission.

surrendered it. Nonetheless, the court would apply an estoppel where none exists and defeat the doctrine of equivalents.

LINN, Circuit Judge, concurring-in-part, dissenting-in-part, in which Circuit Judge RADER joins.

I join the majority's articulate and well-reasoned answers to Questions 1, 2 and 4; however, I must, respectfully, dissent from the answer of the majority to Question 3 and from Part III, Section C of the opinion of the court. In my opinion, the majority's new rigid bright line rule, eliminating all flexibility in the scope afforded certain claim limitations amended for a statutory purpose just because they were amended for a statutory purpose, goes too far. The reasons expressed by the majority do not justify this dramatic policy shift.

With all due respect to my colleagues in the majority, the new bright line rule, as simple as it is hoped to be in application, wrongfully sets in place a regime that increases the cost and complexity of patent prosecution to the detriment of individual inventors, start-up companies, and others unable to bear these increased costs. The new regime also places greater emphasis on literary skill than on an inventor's ingenuity; gives unscrupulous copyists a free ride on the coattails of legitimate inventors; and changes the rules under which prosecution strategies were formulated for thousands of extant patents no longer subject to correction. I find particularly apt here the concerns expressed by the Supreme Court in *Warner-Jenkinson* when it considered the petitioner's request for a bright line rule precluding "recapture" of any part of surrendered subject matter under the doctrine of equivalents: "[t]o change so substantially the rules of the game now could very well subvert the various balances the PTO sought to strike when issuing the numerous patents which have not yet expired and which would be affected by our decision." *Warner-Jenkinson Co. v. Hilton Davis Chem. Co.*, 520 U.S. 17, 32 n. 6 (1997).

In my opinion, the approach to prosecution history estoppel as articulated by the Supreme Court and long followed by this court should remain the rule. As long as the reason for an amendment is explained, an estoppel by amendment should only bar recapture of the subject matter actually surrendered, as discerned from the amended claim language and the reasons articulated by the applicant for the change. The mere fact that an amendment to a claim is made pursuant to a statutory requirement is insufficient in and of itself to conclude that all subject matter beyond the literal scope of the amended claim language has been surrendered, even where the amendment is made to overcome prior art.

Both by taking an expansive view of what constitutes a "substantial reason relating to patentability" and by applying prosecution history estoppel as a complete bar to any reliance on the doctrine of equivalents for claim limitations narrowed by amendment, the majority unfairly tips the balance away from patentees and toward competitors by constraining the legitimate rights of patentees to their inventions, even where competitors can reasonably determine the reasons for any amendments and the scope of any subject matter surrendered. In my view, this is an ill-advised major policy shift that is neither compelled nor justified at this time.

DISCUSSION

Purpose of the Patent System

The Constitution authorizes Congress "[t]o promote the Progress of . . . useful Arts, by securing for limited Times to . . . Inventors the exclusive Right to their . . . Discoveries." U.S. Const. art. I, § 8, cl. 8. The foregoing evinces the founding fathers' intent that the federal patent laws of the United States be directed to the public purpose of fostering technological progress. *See Hilton Davis Chem. Co. v. Warner-Jenkinson Co., Inc.*, 62 F.3d 1512, 1536, 35 U.S.P.Q.2d 1641, 1660 (Fed. Cir. 1995) (en banc) (Newman, J., concurring), *rev'd on other grounds*, 520 U.S. 17 (1997).

An exclusive right granted by the government for one's invention has value to an inventor as a guarantee of protection, and, thus, stimulates inventors to add to the sum of human knowledge. *See* Paul C. Craane, *At The Boundaries Of Law And Equity: The Court Of Appeals For The Federal Circuit And The Doctrine Of Equivalents*, 13 N. Ill. U.L. Rev. 105, 107-08 (1992). To obtain this exclusive right, the inventor must disclose his invention to the public. Thus, the patent also is of value to the public because such disclosures will stimulate others to add to the sum of human knowledge through the creation of other inventions utilizing the lessons learned by the patentee. *See id.* at 108-09.

Strong patent protection is key to encouraging innovation, economic growth, and American competitiveness. *See* Paul J. Otterstedt, *Unwrapping File Wrapper Estoppel In The Federal Circuit: A New Economic Policy Approach*, 67 St. John's L. Rev. 405, 422 (1993). "From their inception, the federal patent laws have embodied a careful balance between the need to promote innovation and the recognition that imitation and refinement through imitation are both necessary to invention itself and the very life blood of a competitive economy." *Bonito Boats, Inc. v. Thunder Craft Boats, Inc.*, 489 U.S. 141, 146, 109 S. Ct. 971, 103 L. Ed. 2d 118 (1989). Thus, the patent laws attempt to provide each inventor with reasonable assurances that the reward to which he or she is entitled will, in fact, be given. And, these same laws also attempt to provide competitors with notice of the patent owner's rights. Strong patent protection must both accommodate and balance justice to the patentee and notice to the public of the patentee's rights.

Claims Use Ordinary Language to Capture Concepts

To protect an invention through the United States patent laws, an inventor must use patent "claims." *See* 35 U.S.C. § 112, second paragraph (1994). The purpose of this requirement is to give notice of the technology that the patent controls. *See Slimfold Mfg. Co. v. Kinkead Indus.*, 932 F.2d 1453, 1457 (Fed. Cir. 1991) ("Inherent in our claim-based patent system is . . .

the principle that the protected invention is what the claims say it is, and thus that infringement can be avoided by avoiding the language of the claims.")

There is no disputing that an inventor is free to craft claims any way he sees fit to "particularly point[ ] out and distinctly claim[ ] the subject matter [that he] regards as his invention." 35 U.S.C. § 112, second paragraph. However, a claim is a linguistic description of a mental concept. Due to the inherent limitations of language, the fit between the description and the concept is almost always inexact. *See* Br. for Amicus Curiae Fed. Cir. Bar Assoc. in *Hilton Davis Chem. Co. v. Warner-Jenkinson, Inc.*, Appeal No. 93- 1088, 3 Fed. Cir. B.J. 345, 348 (1993). In addition to the inexact fit caused by the inherent limitations of language, the language itself may not be adequately developed at the early stages when patent applications typically are filed, particularly in rapidly evolving research fields.

Besides the foregoing language issues, the early patent application filings encouraged by the U.S. patent laws give rise to additional difficulties in crafting a claim that particularly points out the subject matter that the inventor regards as his invention. For inventions in rapidly evolving fields, application filings are often made while the inventions are still in their nascent stages, i.e., early in the evolutionary process, necessitating inevitable and sometimes considerable fine tuning of claim language after the initial application filings have been made. Moreover, while an inventor is often aware of relevant prior art relating to the area he is developing, he is not always fully cognizant of all of the relevant prior art until after his application has been filed, thus again necessitating some fine tuning of claim language after the initial application filing has been made.

As a consequence of the foregoing, it is quite difficult for claim drafters to draft initial claims that adequately and accurately cover the "invention" on the day the patent application is filed. Consequently, claims are commonly

amended during prosecution to more particularly point out and distinctly claim that which is regarded to be the invention. *See Loctite Corp. v. Ultraseal Ltd.*, 781 F.2d 861, 871, 228 U.S.P.Q. 90, 96 (Fed. Cir. 1985) (noting that comparatively few claims are allowed exactly as originally filed), overruled on other grounds by *Nobelpharma AB v. Implant Innovations*, Inc., 141 F.3d 1059, 46 U.S.P.Q.2d 1097 (Fed. Cir. 1998); *Hughes Aircraft Co. v. United States*, 717 F.2d 1351, 1363, 219 U.S.P.Q. 473, 481 (Fed. Cir. 1983); *Litton Sys. Inc., v. Honeywell, Inc.*, 140 F.3d 1449, 1455, 46 U.S.P.Q.2d 1321, 1325 (Fed. Cir. 1998).

While the majority opinion is very clear that the court's new bright line rule applies only to claim limitations narrowed by amendment, it does not articulate with like clarity what it considers to be a "narrowing" amendment. In drafting an original claim of a patent application, the writer sets out the metes and bounds of the invention using words in their ordinary sense or in any special sense ascribed to those words in the written description. When the claim drafter amends the terms used in the original claims, such as by adding an adjective or choosing a different word than originally used, such changes will serve to more distinctly point out that which is the invention and ordinarily, though not inevitably, will signify a difference in intended claim coverage. If the change is merely the substitution of one synonymous word for another or the mere clarification of language from a foreign translation, the claim drafter may intend no change whatsoever in claim scope; but the drafter's word choice may be construed after grant of the patent to imply a different scope simply because changes to claim language are not made merely for aesthetic reasons. However, just because the claim drafter amends a claim limitation, does not mean he "intends" to narrow the scope of his claim coverage or to give up all subject matter beyond the literal scope of the amended language. The only inference one should draw from the mere fact alone that an amendment was made is that the claim drafter "intends" the patent to be issued.

See Glenn K. Beaton, *File Wrapper Estoppel And The Federal Circuit*, 68 Denv. U.L. Rev. 283, 286 (1991) (noting that the patentee presumably "intends" that his reward for promoting the progress of the useful arts be as great as possible and that the limits to his reward be as small as possible).

Doctrine of Equivalents: Borne of Equity

"That the claims of a patent should be clear and should control the determination of infringement has been emphasized by the Supreme Court for over a century." Donald S. Chisum, *The Scope Of Protection For Patents After The Supreme Court's Warner-Jenkinson Decision: The Fair Protection-Certainty Conundrum*, 14 Santa Clara Computer & High Tech. L.J. 1, 6 (1998) (citing 5 Donald S. Chisum, Chisum on Patents, § 8.02[3] (1997)); *Merrill v. Yeomans*, 94 U.S. 568, 573-74, 24 L. Ed. 235 (1876) ("[N]othing can be more just and fair, both to the patentee and to the public, than that the former should understand, and correctly describe, just what he has invented and for what he claims a patent.") Nevertheless, the Supreme Court has recognized that "strict and literal adherence to the written claim in determining the scope of protection [to afford to a patentee] can invite subversion of a valuable right and substantially diminish the economic value of patents." Chisum, *supra*, at 6 (citing Chisum on Patents, *supra*, § 18.02); *see also Graver Tank & Mfg. Co. v. Linde Air Prods. Co.*, 339 U.S. 605, 607 (1950). In other words, a system of protection for patentees limited to literal infringement subjects the patentee to the mercy of verbalism and "would convert the protection of the patent grant into a hollow and useless thing." *Graver Tank*, 339 U.S. at 607.

Thus, "[t]o temper unsparing logic and prevent an infringer from stealing the benefit of the invention" and thereby ensure that the patent grant is not converted into a useless thing by being subject to the mercy of verbalism, the Supreme Court embraced the doctrine of equivalents. *Id.* at 608 (quoting Judge Learned Hand in *Royal Typewriter Co. v. Remington Rand*, 168 F.2d 691, 692 (2d Cir. 1948)). This doctrine was borne of

equity to allow room for justice to the patentee against those who manage to avoid the letter of the invention as it was claimed in the patent through "unimportant and insubstantial changes." *Id.* at 607; *see* Harold C. Wegner, *Equitable Equivalents: Weighing the Equities to Determine Patent Infringement in Biotechnology and Other Emerging Technologies*, 18 Rutgers Computer & Tech. L.J. 1, 6-16 (1992) (providing a definitive discussion of the origin of the doctrine of equivalents); Donald R. Dunner & J. Michael Jakes, *The Equitable Doctrine of Equivalents*, 75 J. Pat. & Trademark Off. Soc'y 857, 859 (1993) ("[T]he doctrine of equivalents did not originate strictly as a way to catch infringers who avoided the literal language of patent claims [since the doctrine of equivalents dates back long before peripheral claiming]. The doctrine was primarily an equitable one, to be applied against copyists who made only slight changes in the form of the invention."); *but see* Robert P. Taylor and Celine T. Callahan, *The Doctrine of Equivalents After Hilton Davis: Many Unanswered Questions*, 489 PLI/Pat 7, 26-27 (1997) (noting that the Supreme Court in *Warner-Jenkinson* appears to have held that the doctrine of equivalents is not a doctrine of equity).

While it is generally agreed that the doctrine of equivalents stands at the intersection of justice to the patentee and notice to competitors of the patentee's rights, the United States patent law embraces this conflict to provide an inventor with security in the patent rights granted by the law and to stimulate technological progress. *See Graver Tank*, 339 U.S. at 607 (noting that subjecting the inventor to the mercy verbalism would deprive the inventor of his invention and would foster concealment rather than disclosure of invention); *see also Hilton Davis*, 62 F.3d at 1531, 35 U.S.P.Q.2d at 1656 (Newman, J., concurring) (noting that the dependence of industry on technology, the reduced opportunity to rely on trade secrecy because of today's enlarged analytical capability, the ease and speed of imitation and modification once the innovator has shown the way, the harshness of modern

competition, and the ever-present need for industrial incentives are factors that favor a rule that tempers the rigor of literalness); Wegner, *supra*, at 31-32 (noting that "[p]atent protection that can be easily circumvented is antithetical to building a strong research-based industrial technology").

The problems noted above regarding the inherent limitations of language and the early stage of filing applications have provided justification for the lengthy history of applying the doctrine of equivalents to all claim language to adequately protect the patentee's right to his invention, despite the public notice function the claim terms serve. Even with the majority's new rule, these concepts continue to provide justification for the application of the doctrine of equivalents to original claim language.

In my opinion, the majority's new bright line rule eliminating all flexibility in the scope of claim limitations amended for a statutory purpose reflects an unjustified faith in the draftsperson to select language to perfectly describe a new and unobvious invention at an early stage of the development process. The same limitations of language noted in selecting words to describe an invention in the first instance are no less present in selecting words to avoid an examiner's rejection of that original language for one statutory reason or another.

Furthermore, the majority's new rule will substantially increase the cost of obtaining patent protection, and may in fact become prohibitively high for individual inventors and start-up companies. It will require applicants to undertake exhaustive pre-filing searches, which will not only be costly but also time consuming. It will also require applicants to file in an original application numerous "narrow" claims or, if "broad" claims are sought, to be prepared to argue to the patent examiner, to the board of appeals, and to this court the impropriety of all rejections for patentability reasons, rather than to amend those claims, given the harsh consequences of amendments under the majority's new bright line rule. It will also deter applicants from attempting to expedite prosecution and attain early

allowance by making minor or clarifying amendments to the claims, either in anticipation of the initial office action or at subsequent times during prosecution, for fear of triggering a complete bar to later reliance on the doctrine of equivalents. This will result in protracted prosecution and dramatically increased costs for many applications. These increases in costs and complexity will also come at a time when greater prosecution investments may be hard for many applicants to justify because the commercial value of the inventions covered may not then be fully apparent. In my view, this will most detrimentally impact individual inventors and start-up companies, and may have the effect of impeding, not advancing, technological progress, contrary to the purpose of the patent system.

Warner-Jenkinson's Effect on the Doctrine of Equivalents

While I agree with the majority that the question of the scope of equivalents available to a claim element that has been amended for a known patentability reason was not directly addressed by *Warner-Jenkinson*, the Supreme Court did discuss the fact that an amendment to a claim element "does not necessarily preclude infringement by equivalents of that element." *Warner-Jenkinson*, 520 U.S. at 33. In fact, where the record reveals a reason for the claim amendment, the Court noted that those "reasons for a claim amendment may avoid application of prosecution history estoppel." *Id.* In addition, the Court recognized that whether or not prosecution history estoppel is avoided will depend upon the "reason (right or wrong) for the [examiner's rejection of the claim prior to its being amended] and the manner in which the amendment addressed and avoided that [rejection]." *Id.* at 33 n. 7, 117 S. Ct. 1040.[15]

---

[15] While it is true that footnote 7 was directed to a claim change made relative to avoiding the prior art, presumably the same methodology was meant to apply to claims amended for other reasons, since the Court set forth

(continued...)

After specifically stating that the reasons for a claim amendment are relevant to any subsequent application of prosecution history estoppel as a bar to the application of the doctrine of equivalents, *see id.* at 30-32, the Court noted that the definitional and notice functions of the claims require the patentee to establish a reason for an amendment in order to avoid the estoppel, *see id.* at 33. In the absence of a reason, the Court explained that "prosecution history estoppel would bar the application of the doctrine of equivalents as to that element," because it would be presumed that the limiting element added by amendment was for a substantial reason related to patentability. *Id.* The Court determined that "[a]pplied in this fashion, prosecution history estoppel places reasonable limits on the doctrine of equivalents, and further insulates the doctrine from any feared conflict with the Patent Act." *Id.* at 34.

If the doctrine of equivalents is completely barred when no reason for an amendment can be discerned from the prosecution history, and it is likewise completely barred when a reason is stated, what is the point of exploring the "reason (right or wrong) for the [examiner's rejection of the claim prior to its being amended] and the manner in which the amendment addressed and avoided that [rejection?]" *Id.* at 33 n. 7. Thus, adoption of a rebuttable presumption of estoppel for an amendment that was made for an unknown reason necessarily presupposes the possibility that no estoppel will apply where the reason for the amendment is known, or where the presumption is rebutted.

The petitioner argued to the Supreme Court in *Warner-Jenkinson* that "any surrender of subject matter during

---

[15] (...continued)
the methodology just after stating in the body of the opinion: "[w]here the reason for the [claim] change was not related to avoiding the prior art, . . . [the change] does not necessarily preclude infringement by equivalents of that element." *Warner-Jenkinson*, 520 U.S. at 33.

patent prosecution, regardless of the reason for such surrender, precludes recapturing any part of that subject matter, even if it is equivalent to the matter expressly claimed." *Id.* at 30. The Supreme Court rejected that argument. *See id.* I think it is fair to conclude that *Warner-Jenkinson* reaffirmed the long standing principle applied by this court before today that to determine the scope of prosecution history estoppel, if any, to be applied to an amended claim limitation with reasons extant in the prosecution file, one must look to the exchange between the examiner and the patentee in the prosecution file to determine that which was surrendered by the patentee in making the amendment.[16] In applying the majority's new rule, a court does not explore the exchange that occurred between the examiner and the patentee during the prosecution of the patent to elucidate the construction the patentee intended to disavow. Thus, the majority's new rule, invoking a complete estoppel with no flexibility for a narrowing amendment made for a statutory purpose, effectively disregards the "reason" for a change, in contravention of *Warner-Jenkinson*.

Public Policy

The majority contends that the disclaimer effect, the notice function, and the need for certainty in patent law are supporting public policies for its new strict rule regarding amended

---

[16] This conclusion is further buttressed by the fact that in thinking about prosecution history estoppel, the Court in *Warner-Jenkinson* had in mind the doctrine as set forth in *Bayer Aktiengesellschaft v. Duphar Int'l Research B.V.*, 738 F.2d 1237, 222 U.S.P.Q. 649 (Fed. Cir. 1984). *See id.* at 30 (citing Bayer as a case that sets forth the "well-established limit on non-literal infringement, known variously as 'prosecution history estoppel' and 'file wrapper estoppel.' "). In *Bayer*, our court stated: "whenever the doctrine of file history estoppel is invoked, a close examination must be made as to, not only what was surrendered, but also the reason for such a surrender. The fact that claims were narrowed does not always mean that the doctrine of file history estoppel completely prohibits a patentee from recapturing some of what was originally claimed." *Bayer*, 738 F.2d at 1238, 222 U.S.P.Q. at 653.

limitations. *See* maj. op. at 22a-23a. The majority asserts that by amending a claim for any reason related to a statutory requirement for obtaining a patent, the patentee disclaims subject matter encompassed by the original claim. In view of this disclaimer, the majority contends that it must be strictly construed against the inventor in favor of the public, otherwise the benefit of the doubt as to what was disclaimed comes at the public's expense. *See id.* at 573-74. But the same arguments can be made for originally filed claim limitations, which, like amended claim limitations, are a disclaimer of certain subject matter.

As mentioned previously, 35 U.S.C. § 112, second paragraph, requires that the patentee specifically claim the invention covered by the patent. The purpose of this statutory requirement to notify the public of the scope of conduct forbidden by the patent is applicable whether a limitation is originally presented by the applicant or added by amendment for any reason related to one of the statutory requirements for obtaining a patent. The majority does not explain why a new bright line rule is compelled to strictly construe the inventor's choice of words in amendments but is not similarly compelled for original claim limitations. Certainly, the benefit of the doubt as to what was disclaimed comes at the public's expense in either case.

Paradoxically, the scope and meaning of claim limitations may be more easily discerned for amended limitations, as compared with originally drafted claim limitations, based on the record developed during prosecution. First-action allowances, with no real interchange or substantive commentary between the applicant and the examiner regarding any of the originally drafted claim limitations, provide no notice of the scope and meaning of those limitations beyond the words themselves as used in the written description and claims. Thus, in some ways, the public-notice function may be better served by explained amended language than by unexplained original claim language, yet the majority's new rule favors the

latter by leaving the doctrine of equivalents unrestrained for claim limitations that are not amended.

As the Supreme Court noted in *Warner-Jenkinson*, "the lengthy history of the doctrine of equivalents strongly supports adherence to [the] refusal [by the Court] in [*Graver Tank*] to find that the Patent Act conflicts with that doctrine. Congress can legislate the doctrine of equivalents out of existence any time it chooses." *Warner-Jenkinson*, 520 U.S. at 28. The Court specifically noted that the policy arguments that justify keeping or eliminating the doctrine are best addressed by Congress, not the Court. *See id.* Since the issuance of the Supreme Court's opinion in *Warner- Jenkinson*, Congress has not chosen to eliminate the doctrine of equivalents partially or entirely, and I do not believe it is the province of this court to partially legislate out of existence that doctrine for amended claim limitations; particularly in the absence of a compelling justification for treating amended claim language differently than original claim language.

Promoting Free Riders v. Promoting Progress of the Useful Arts

The majority contends that the certainty provided by the complete bar approach to amended limitations "will stimulate investment in improvements and design-arounds because the risk of infringement will be easier to determine." Maj. op. at 26a. However, in my opinion, limiting the patentee to protection of only the literal language of an amended claim limitation is not likely to promote the progress of the useful arts. Rather, the majority's new bright line rule, by constraining limitations amended for a statutory purpose to their literal terms, is likely to encourage insubstantial changes to an established product, rather than investment in break-through technological advancements. Such a rule, therefore, promotes free riding and undercuts the return on a patentee's investment.

In other words, the majority's new rule hands the unscrupulous copyist a free ride on potentially valuable patented technology, as long as the copyist merely follows the prosecution history road map and makes a change, no matter how trivial or insubstantial, to an element otherwise covered by such a narrowed claim limitation. Every other detail of the patented invention may be imitated with impunity. Such an "unscrupulous copyist" appropriates the substance of the invention while avoiding the letter of the claims, yet adds nothing to the technology. The copyist, transformed as a lawful competitor, can take refuge in the excuse that if the patentee wanted better coverage, the claims should have been prosecuted more competently.

As our predecessor court aptly stated: "[t]o allow literality to satisfy the test for infringement would force the patent law to reward literary skill and not mechanical creativity." *Autogiro Co. of Am. v. United States*, 384 F.2d 391, 399 (Ct. Cl. 1967). I do not think that is how our patent system or any patent system was intended to work. Patent laws seek to benefit the inventor's genius, not the scrivener's talents. *See id.* The majority's new rule, which sanctions the behavior of the copyist who avoids the letter of the claims and adds nothing to the technology, is likely to be a disincentive for inventors to bear the commercial risk in developing and disclosing new technology.

The majority's concern regarding certainty is that under our previous precedent the scope of the estoppel had a spectrum of coverage and there was no precise metric to determine the exact range of equivalents within that spectrum. *See* maj. op. at 25a. This concern regarding the public's ability to know what is and what is not within the confines of a patent monopoly is not a new one.

The dissents in *Winans v. Denmead*[17], 56 U.S. (15 How.) 330, (1853), and *Graver Tank*[18] strongly disagreed with their respective majority's liberal view towards infringement by equivalence, feeling that to interpret the language of the patent to include equivalents would undermine the claiming system and destroy the public's ability to rely on the patent claiming system to mark the boundaries granted to the patentee. *See* Craane, *supra*, at 134-35. However, it is noteworthy that the forebodings expressed in the *Winans* and *Graver Tank* dissents regarding the impediment to economic growth have not been realized. Competition still abounds in the marketplace and technology has progressed at a remarkable rate.

Subject Matter Surrendered

Our prior precedent instructs that "amendments may be of different types and may serve different functions. Depending on the nature and purpose of an amendment, it may have a

---

[17] "The patentee is obliged, by law, to ... particularly 'specify and point' out what he claims as his invention. Fullness [sic], clearness, exactness, preciseness, and particularity, in the description of the invention, its principle, and of the matter claimed to be invented, will alone fulfill [sic] the demands of Congress or the wants of the country. Nothing, in the administration of this law, will be more mischievous, more productive of oppressive and costly litigation, of exorbitant and unjust pretensions and vexatious [sic] demands, more injurious to labor, than a relaxation of these wise and salutary requisitions of the act of Congress." *Winans*, 56 U.S. at 347 (Campbell, J., dissenting).

[18] "The Court's ruling today sets the stage for more patent 'fraud' and 'piracy' against business than could be expected from faithful observance of the congressionally enacted plan to protect business against judicial expansion of precise patent claims. Hereafter a manufacturer cannot rely on what the language of a patent claims. He must be able, at the peril of heavy infringement damages, to forecast how far a court relatively unversed in a particular technological field will expand the claim's language after considering the testimony of technical experts in that field. To burden business enterprise on the assumption that men possess such a prescience bodes ill for the kind of competitive economy that is our professed goal." *Graver Tank*, 339 U.S. at 617 (Black, J., dissenting).

limiting effect within a spectrum ranging from great to small to zero. The effect may or may not be fatal to application of a range of equivalents broad enough to encompass a particular accused product. It is not fatal to application of the doctrine itself." *Hughes*, 717 F.2d at 1363. For at least the past seventeen years, beginning with our seminal case in *Hughes*, we have consistently held that prosecution history estoppel bars infringement by equivalents by reason of the patentee's manifest intent to disavow or abandon a construction of the patent claim as a condition of the patent grant. *See Bayer*, 738 F.2d at 1243, 222 U.S.P.Q. at 653; *Loctite*, 781 F.2d at 871, 228 U.S.P.Q. at 96; *Sun Studs, Inc. v. ATA Equip. Leasing, Inc.*, 872 F.2d 978, 987, 10 U.S.P.Q.2d 1338, 1345 (Fed. Cir. 1989); *Mark I Mktg. Corp. v. R.R. Donnelley & Sons Co.*, 66 F.3d 285, 291, 36 U.S.P.Q.2d 1095, 1100 (Fed. Cir. 1995); *Sextant Avionique, S.A. v. Analog Devices*, 172 F.3d 817, 830-32, 49 U.S.P.Q.2d 1865, 1870-72 (Fed. Cir. 1999). Moreover, we have instructed that the intended construction that has been disavowed is to be determined from an objective evaluation of the exchange between the examiner and the patentee that occurred in the prosecution history, whether explicit or implicit.

I agree that the extent to which the patentee would be deprived of equivalents according to our past precedent necessarily involves the often arduous task of reviewing difficult and complex prosecution histories, as well as difficult and complex technologies. I also agree that these difficulties may give rise to differing opinions as to what subject matter is within the scope of the claim and what has been surrendered. However, the mere fact that this court's new rule is a brighter line for determining whether a patentee is estopped from asserting infringement by equivalents, cannot be justification for adopting a rule that so substantially changes the rules of the game and discounts the intrinsic worth in treating more fairly the individual inventor whose patent right is under administrative scrutiny and is subject to the inherent limitations of language. The Supreme Court in *Warner-Jenkinson* saw no

"substantial cause for requiring a more rigid rule invoking an estoppel [as a complete bar with no flexibility] regardless of the reason for a change." *Warner-Jenkinson*, 520 U.S. at 32. Likewise, I find that the majority's opinion lacks substantial cause for its rigid rule.

The majority contends that the approach followed by our court in *Kinzenbaw v. Deere & Co.*, 741 F.2d 383, 222 U.S.P.Q. 929 (Fed. Cir. 1984), is different than the flexible bar approach espoused in *Hughes* and its progeny. I disagree. In *Kinzenbaw* our court examined the prosecution record and noted that whether or not the patentee needed to specify the radius of the gauge wheel to overcome the rejection of the claims over specified prior art, he did in fact do just that. *Kinzenbaw*, 741 F.2d at 388, 222 U.S.P.Q. at 932-33. After our analysis of the prosecution record, the court also noted that a reasonable competitor would believe that the patentee had surrendered the relevant subject matter in view of the file which "explicitly showed that in response to the examiner's rejection, [the inventor] narrowed his claims to a planter in which 'the radius of the wheel . . . [is] less than the radius of the disc.'" *Id.* In other words, this court's position was that when the prosecution record is viewed objectively, the patentee manifested an intention to disavow anything but the relationship of the radius of the gauge wheel to the radius of the discs to obtain his patent from the Patent Office, even though it might not have been necessary.

The foregoing does not evince a split in our precedent, but rather comports with *Hughes* that courts must undertake an examination of the prosecution record to determine the subject matter the patentee disavowed by amendment, whether or not the patentee contends the amendment was necessary to obtaining the patent. As this court has stated: "[u]nmistakable assertions made by the applicant to the . . . PTO . . . in support of patentability, whether or not required to secure allowance of the claim, . . . may operate to preclude the patentee from asserting equivalency . . .." *Texas Instruments Inc. v. United*

States Int'l Trade Comm'n, 988 F.2d 1165, 1174, 26 U.S.P.Q.2d 1018, 1025 (Fed. Cir. 1993). The patentee's subjective determination of whether or not an amendment would have been needed to secure allowance of a claim is irrelevant. If an unmistakable assertion was made by the applicant to the Patent Office to obtain allowance of the patent, as viewed from the objective standpoint of a reasonable competitor, then the scope of prosecution history estoppel is zero. *Kinzenbaw* is a case that emphasizes that a patentee cannot take one position before the Patent Office to get his claim allowed, whether that position was necessary or not, and then assert a different position in court to prove infringement.

As explained above, I believe it is fair to conclude that the Supreme Court in *Warner-Jenkinson* left intact the principle of determining that which the patentee surrendered by looking at the exchange between the examiner and the patentee recorded in the prosecution history. Some amendments may be made for a statutory reason, such as providing proper antecedent basis, which is required by 35 U.S.C. § 112, second paragraph's requirement that the applicant particularly point out and distinctly claim that which is regarded as the invention. However, while such an amendment affects issuance of the patent, it is a trivial matter. Restricting such an amended claim limitation to its literal scope would unfairly penalize patent owners beyond what is necessary to provide notice and certainty to competitors. As long as the reason for an amendment is explained, and a competitor can reasonably determine what subject matter the applicant surrendered, prosecution history estoppel should preclude the patent holder from recapturing only the surrendered subject matter, not from accessing the doctrine of equivalents entirely. In my view, the flexible approach best balances fairness to inventors with certainty to competitors and strikes an appropriate accord between the required rewards for the already expensive and lengthy process of innovation, and the extra public costs of monopoly profits. *See* Otterstedt, *supra*, at 424.

CONCLUSION

Because claims are commonly amended during prosecution, prosecution history estoppel touches almost every doctrine of equivalents infringement analysis. *See Loctite*, 781 F.2d at 871, 228 U.S.P.Q. at 96. Although a complete bar would provide bright line enhancement of the notice function of claims, it unfairly subjects almost every patentee to the mercy of verbalism at an early stage of development. *See Graver Tank*, 339 U.S. at 607. Rather than promote technological growth, the majority's new rigid rule will effect a serious invasion of the patentee's security of receiving the full benefit of his invention and is likely to be a disincentive to early disclosure of new inventions and discoveries. I see no substantial cause for the majority's drastic action, and I must, respectfully, dissent from the pronouncement that any time a claim limitation is narrowed by amendment for any statutory purpose, regardless of the nature and extent of the change, prosecution history estoppel completely bars the application of the doctrine of equivalents.

PAULINE NEWMAN, Circuit Judge, concurring in part, dissenting in part.

This appeal returns to the Federal Circuit on GVR from the Supreme Court,[19] with instructions to reconsider our prior decision in accordance with the law announced in *Warner-Jenkinson Co. v. Hilton Davis Chemical Co.*, 520 U.S. 17, 41 U.S.P.Q.2d 1865 (1997). Two major issues are

---

[19] *Shoketsu Kinzoku K. K., Ltd. v. Festo Corp.*, 520 U.S. 1111 (1997). The sequence of events called "GVR" (grant, vacate, and remand) occurs when "intervening developments . . . reveal a reasonable probability that the decision below rests on a premise that the lower court would reject if given the opportunity for further consideration." *Lawrence v. Chater*, 516 U.S. 163, 167 (1996). It is a mandate to the lower courts to apply the intervening developments to the case on appeal, "to ensure the fairness and accuracy of judicial outcomes." *Id.*

presented for our review on remand: (1) application of the Court's new rebuttable presumption and any ensuing estoppel to the claims of Festo's Carroll and Stoll patents; and (2) application of the all-elements rule to the sealing rings of the Carroll and Stoll patents and the magnetizable sleeve of the Stoll patent.

For the first remand issue, today's majority opinion departs from the holdings of *Warner-Jenkinson* in three important ways. First, the majority holds that all equivalency is barred as to any claim element that is narrowed or added for reasons relating to patentability; access to the doctrine of equivalents is barred whether or not the Court's new rebuttable presumption arises and whether or not it is rebutted. Second, the majority denies consideration to any rebuttal evidence that is not already in the prosecution record, thereby converting the rebuttable presumption into an irrebuttable fiat. Third, the majority's inappropriately broad definition of "reasons related to patentability" further limits a patentee's access to equivalency, and exacerbates the conflict with the holdings of *Warner-Jenkinson*. The result is to negate infringement by equivalents, as a matter of law, thereby providing a blueprint for ready imitation of patented products.

The majority does not reach the second remand issue, the application of the all-elements rule. However, the all-elements rule is central to the Supreme Court's treatment of the tension between the doctrine of equivalents and the "notice function" of patent claims. Although my colleagues in the majority identify the "notice function" as the reason for their new and extreme restraints on the doctrine of equivalents, the majority opinion neither discusses nor acknowledges the Court's considered actions to reinforce the notice function.

Thus the majority ignores the bases of the GVR which returned this case to us, and instead manipulates the issues of equivalency and estoppel to achieve a policy-driven result. In acting to severely limit the doctrine of equivalents, this court has made a deliberate change in the relationship between

innovator and competitor. Although the Supreme Court rejected judicial entry into this policy arena, the majority has entered headlong, criticizing 150 years of Supreme Court precedent and 18 years of Federal Circuit precedent as "unworkable." This spontaneous judicial action represents a venture into industrial policy whose consequences have been inadequately considered. The majority's announced purpose of facilitating competition by restricting patentees' access to the doctrine of equivalents has not been evaluated for its effect on the nation's technology-based industry, for its effect on the system of patents as an innovation incentive, or indeed for its effect on competition. The interdependent policy aspects of technologic innovation, industrial growth, and competition were not briefed, and do not inhere in this court's "special expertise" in adjudication of patent disputes.

I

CONFLICTS WITH THE LAW OF WARNER-JENKINSON

Prosecution History Estoppel

The Court in *Warner-Jenkinson* confirmed its precedent that estoppel flows from a patent applicant's disclaimer or surrender of subject matter for reasons of patentability; precedent has never held that no equivalency whatsoever is available to amended claim elements. The majority's departures from this law are summarized in its rulings that "an amendment that narrows the scope of a claim for any reason related to the statutory requirements for a patent will give rise to prosecution history estoppel with respect to the amended claim element," maj. op. at 4a, that "no range of equivalents is available for the amended claim element," *id.*, and that amendments made to comply with virtually any provision of the Patent Act will raise this estoppel, *id.* at 9a-10a. These rulings contravene the Court's holdings in *Warner-Jenkinson*.

In *Warner-Jenkinson* the Court summarily dismissed the argument that "any surrender of subject matter during patent

prosecution, regardless of the reason for such surrender, precludes recapturing any part of that subject matter, even if it is equivalent to the matter expressly claimed." *Warner-Jenkinson*, 520 U.S. at 30, 41 U.S.P.Q.2d at 1871. The Court held that the patentee Hilton Davis, upon establishing the reason why the applicant amended the claims to include a lower pH limit of "approximately 6.0," may be entitled to prove equivalency between a pH of 5.0 and approximately 6.0 in the process of that invention. Observing that it was unclear why the pH limit of 6.0 had been added to the claims, the Court ruled that inclusion of this limitation did not necessarily preclude a finding of infringement based on equivalency:

> [W]hile a lower limit of 6.0, by its mere inclusion, became a material element of the claim, that did not necessarily preclude the application of the doctrine of equivalents as to that element.

Id. at 32, 41 U.S.P.Q.2d at 1872. The majority's new rules would bar the inquiry for which the Court remanded *Warner-Jenkinson* to the Federal Circuit. The Court in *Warner-Jenkinson* reaffirmed its precedent wherein the patentee is estopped from reaching, through equivalency, subject matter that the applicant had disclaimed or surrendered in order to obtain the patent. *See, e.g., Exhibit Supply Co. v. Ace Patents Corp.*, 315 U.S. 126, 136-137 (1942) (the patentee had "surrendered by amendment," "proclaimed his abandonment of" and "disclaimed" the subject matter that was used by the accused infringer); *Smith v. Magic City Kennel Club, Inc.*, 282 U.S. 784, 790 (1931) (describing an amendment made after persistent examiner's rejection as a "disclaimer"); *Weber Electric Co. v. E.H. Freeman Electric Co.*, 256 U.S. 668, 676 (1921) ("it is clear that the chief concern of the applicant [after rejection] was to distinguish his construction from that of Kenny, which is very similar to [that of the accused infringer]"). These cases, although mentioned in the majority opinion, do not support the majority's new rules, for

in no case did the Court find an estoppel as to subject matter that was not surrendered in order to obtain the patent and that was not embraced in the difference between the prior art and the applicant's invention.

The majority recasts prosecution history estoppel in a legally incorrect and equitably unjust manner. As illustrated by the Carroll and Stoll patents in suit, equivalents are now held forfeited whether or not the claimed element itself was amended, or even discussed, during prosecution. In contrast, the Court has consistently held that the law of estoppel requires determination of what was surrendered and why, measured by the representations made by the applicant in order to obtain the patent. Precedent as to prosecution history estoppel is strikingly uniform in not only the judicial statement of the law, but in its application. There has been no groundswell of concern for unpredictable judicial application of the rules of estoppel, even by those who have expressed concern for unpredictable application by juries of the rules of equivalency. Today's actions imposing an absolute estoppel against equivalency—instead of sharpening the criteria for determining equivalency (as the Court instructed)—make manifest the magnitude of the majority's change in the law.

The Rebuttable Presumption

As part of its reinforcement of the notice function of claims, the Court established a new rebuttable presumption. In accordance with this presumption, when the prosecution record is silent as to the reason for a change to the claims, the presumption arises that the change was made for "a substantial reason related to patentability." *Warner-Jenkinson*, 520 U.S. at 33, 41 U.S.P.Q.2d at 1873. This new presumption and ensuing estoppel are carefully designed controls that require consideration of the "reasoning behind the Patent Office's insistence upon a change in the claims." *Id.* at 32, 41 U.S.P.Q.2d at 1872. The Court recognized that estoppel does not arise from every change, but depends on whether the change was made for patentability reasons:

> Where the reason for the change was not related to avoiding the prior art, the change may introduce a new element, but it does not necessarily preclude infringement by equivalents of that element.

Id. The patentee may then come forward with evidence to rebut the presumption. *Id.* at 33, 41 U.S.P.Q.2d at 1873.

The majority holds that the presumption can only be rebutted by evidence that is already present in the prosecution record. Maj. op. at 47a ("a patent holder seeking to establish the reason for an amendment must base his arguments solely upon the public record of the patent's prosecution, *i.e.*, the patent's prosecution history"). Thus the majority holds that the rebuttable presumption concerning the reason for an amendment, which presumption arises when the prosecution record is silent as to the reason for the amendment, can not be rebutted with evidence outside of the prosecution record. The rebuttable presumption thereby becomes irrebuttable, because the prosecution record is necessarily silent in order for the presumption to arise at all. This impossibility of rebuttal was surely not contemplated by the Court in creating "[t]he presumption we have described, one subject to rebuttal if an appropriate reason for a required amendment is established . . .." *Warner-Jenkinson*, 520 U.S. at 33, 41 U.S.P.Q.2d at 1873.

The nature of a presumption is that it is not sacrosanct on the grounds on which it arose, but can be countered by evidence. *See* Fed. R. Evid. 301 ("a presumption imposes on the party against whom it is directed the burden of going forward with evidence to rebut or meet the presumption"). A presumption is a procedural expedient whereby a conclusion of law or ultimate fact is deemed established upon the proof of certain evidentiary or historical facts. An opposing party may rebut the presumption by coming forward with evidence sufficient to negate the conclusion or its factual premises. *See generally* 21 Charles Alan Wright & Arthur R. Miller, *Federal Practice and Procedure* § 5124 (3d ed.1998). The majority's ruling confuses

the grounds on which a presumption arises with the grounds on which it is subject to rebuttal. The role of the prosecution record is to establish whether the presumption arises at all, not whether it has been rebutted.

That the majority's ruling makes rebuttal impossible is illustrated by the patents in suit. Since Festo's explanation of its amendment to the Carroll claims is now limited to the prosecution record, the presumption can not be rebutted because the prosecution record is silent as to the reason for the amendment. Indeed, since there is no requirement that a patent applicant explain amendments made before an examiner's rejection on the merits—the situation for both the Carroll and Stoll patents—evidence explaining such amendments is not normally present in the prosecution record.

The Supreme Court was explicit that "The presumption we have described [is] subject to rebuttal . . .." 520 U.S. at 33, 41 U.S.P.Q.2d at 1873. The majority's denial of rebuttal evidence outside the prosecution record is equally explicit, with the consequence that the subject matter of unexplained amendments can receive "no range of equivalents." Maj. op. at 12a-13a. The error in this implementation is made clear in the *Warner-Jenkinson* case itself. In *Warner-Jenkinson* the Court observed that "the record seems not to reveal the reason" for the amendment setting the lower pH limit, that the patentee has the burden of establishing the reason, and that "respondent has not proffered in this Court a reason for the addition of a lower pH limit." The Court therefore remanded to the Federal Circuit for determination of whether the patentee could establish a reason for this amendment. Under the regime established by the majority opinion, the Court's remand would be pointless. The Court similarly remanded the *Festo* case now before us. Our obligation is to implement the remand in accordance with its terms, and to determine whether Festo can rebut the presumption that the claims were changed for a reason related to patentability.

"Reasons Related to Patentability"

In *Warner-Jenkinson* the Court explained that amendments made for "a substantial reason related to patentability" means amendments made to establish patentability in view of substantive rejections. The Court observed that there are "a variety of other reasons why the PTO may request a change in claim language" without producing an estoppel, 520 U.S. at 31, 41 U.S.P.Q.2d at 1872, citing the *amicus curiae* brief of the United States. The United States had pointed out that amendments "to reflect the scope of what was enabled or to add specificity raise considerations different from those raised by amendments to avoid prior art." Brief for United States as *Amicus Curiae* at 22-23, 1996 WL 172221, *22-*23. The Court endorsed this understanding of estoppel, explaining:

> Our prior cases have consistently applied prosecution history estoppel only where claims have been amended for a limited set of reasons, and we see no substantial cause for requiring a more rigid rule invoking an estoppel regardless of the reasons for a change.

520 U.S. at 32, 41 U.S.P.Q.2d at 1872.

The Court's emphasis on a "limited set of reasons" is in striking contrast to the unconstrained estoppel established by the majority for any change made in connection with any provision of the Patent Act. In *Warner-Jenkinson* the Court unequivocally rejected this position, stating that the petitioner "reaches too far in arguing that the reason for an amendment during patent prosecution is irrelevant to any subsequent estoppel." 520 U.S. at 30, 41 U.S.P.Q.2d at 1867. The Court stated: "That petitioner's rule might provide a brighter line for determining whether a patentee is estopped under certain circumstances is not a sufficient reason for adopting such a rule." *Id.* at 32 n. 6, 41 U.S.P.Q.2d at 1872 n. 6. The majority now adopts this rejected position.

Supreme Court and Federal Circuit precedent have well recognized that prosecution history estoppel flows from amendments on substantive grounds of patentability. The principal statutory provisions involved during examination for patentability are 35 U.S.C. § 102 and § 103; parts of § 112 may also give rise to estoppel. However, not every rejection based on the Patent Act is concerned with substantive grounds of patentability, as the Court also recognized. An illustration is the Stoll claims, which were rejected not on prior art but as being in improper multiple dependent form, another provision of § 112; Stoll's claims amended in response to this ground of rejection are today held barred from access to the doctrine of equivalents.

The majority discards as "unworkable," maj. op. at 25a, the vast body of precedent which holds that determination of the extent of estoppel requires consideration of the reason for the amendment. *See, e.g., Bayer Aktiengesellschaft v. Duphar Int'l Research B.V.*, 738 F.2d 1237, 222 U.S.P.Q. 649 (1984) (cited in *Warner-Jenkinson*) ("Whenever the doctrine of file history estoppel is invoked, a close examination must be made as to, not only what was surrendered, but also the reason for such a surrender.") Instead, the majority adopts the brighter line that the Court rejected. Thus although I concur with the majority's answer to Question 1 in that precedent holds that estoppel may arise on substantive grounds of patentability in addition to those of § 102 and § 103, I do not share the majority's application of this answer to include any amendment responding to a rejection under any provision of the Patent Act.

Federal Circuit Precedent

The majority seeks to buttress its departure from the law of *Warner-Jenkinson* by stating that it is simply resolving "conflicting lines" of Federal Circuit precedent. However, that is neither an accurate description of our precedent, nor an adequate reason to discard it.

Federal Circuit decisions applying the doctrine of equivalents have turned not on "conflicting lines" of precedent, but on the facts of each case. This precedent illustrates the variety of situations that can arise as to the technologic facts of asserted equivalency, as well as the variety of circumstances of estoppel. At one factual pole are cases that illustrate a patentee's disclaimer, during prosecution, of precisely what the accused infringer is doing. Such cases tend to inspire righteous judicial rhetoric against over-reaching patentees; these opinions voice what the majority terms a "strict" approach to the doctrine of equivalents. At the other factual pole are cases that the majority classifies as the "flexible" approach, the majority's disapproving term for those decisions where liability based on equivalency was found.

This jurisprudence reflects not two disparate lines of conflicting authority, but rulings of estoppel and findings of equivalency vel non in a continuum of situations, from those that clearly warranted liability to those that clearly did not. It is inappropriate to convert the extremes of this continuum into "conflicting lines," and then to use this contrived conflict to justify changing the law to eliminate not only both lines but also everything in- between.

The principal case cited for the majority's "strict line" is *Kinzenbaw v. Deere & Co.*, 741 F.2d 383, 222 U.S.P.Q. 929 (Fed. Cir. 1984). In *Kinzenbaw* the accused device "adopted the very element that [the patentee] had eliminated for the stated purpose of avoiding the examiner's rejection and obtaining the patent." *Id.* at 389, 222 U.S.P.Q. at 933. Holding that the patentee was estopped from asserting equivalency, the Federal Circuit stated that it would not undertake to decide whether Kinzenbaw gave up more than he had to in order to obtain allowance. *Kinzenbaw* has not heretofore been viewed as producing an irreconcilable conflict in precedent. As it was contemporaneously explained, *Kinzenbaw* "highlight[s] that application of prosecution history estoppel to limit the doctrine of equivalents should be performed as a legal matter on a

case-by-case basis, guided by equitable and public policy principles underlying the doctrines involved and by the facts of the particular case." *Loctite Corp. v. Ultraseal Ltd.*, 781 F.2d 861, 871 n. 7, 228 U.S.P.Q. 90, 96 n. 7 (Fed. Cir. 1985).

The majority flags *Hughes Aircraft Co. v. United States*, 717 F.2d 1351, 219 U.S.P.Q. 473 (Fed. Cir. 1983), as the pole of the disapproved "flexible line." In *Hughes Aircraft* this court reiterated the rule that a patentee is estopped to recover through equivalency the scope that was disclaimed for reasons of patentability. *Id.* at 1362, 219 U.S.P.Q. at 481. The ruling of equivalency on the facts of *Hughes Aircraft*, an issue of later-developed technology, has repeatedly been sustained. *See Hughes Aircraft v. United States*, 140 F.3d 1470, 46 U.S.P.Q.2d 1285 (Fed. Cir. 1998) (redetermination of equivalency upon the GVR, 520 U.S.1111, based on *Warner-Jenkinson*).

Although the questions presented in precedent were often close, and not every judge was always of identical view, not even the "strict line" attributed to *Kinzenbaw* represents the extreme position now adopted. In *Warner-Jenkinson* the Court rejected the position that any surrender of subject matter establishes "bright lines beyond which no equivalents may be claimed." 520 U.S. at 30, 41 U.S.P.Q.2d at 1871. The law of *Warner-Jenkinson* bars the position now taken.

The "Notice Function" of Claims

The Supreme Court, reviewing its precedent on equivalency since *Winans v. Denmead*, 56 U.S. (15 How.) 330 (1854), recognized the long-standing tension between equivalency and the "notice function" of patent claims. The Court acted to reinforce the "notice function" by imposing a new combination of criteria for equivalency, comprising (1) the new rebuttable presumption for unexplained amendments, (2) the all-elements rule, and (3) the obligation to examine "the role played by each element in the context of the specific patent claim." *Warner-Jenkinson*, 520 U.S. at 40, 41 U.S.P.Q.2d at 1875.

Discussing the rebuttable presumption, the Court stated that "The presumption we have described . . . gives proper deference to the role of claims in defining an invention and providing public notice . . .." *Id.* at 33-34, 41 U.S.P.Q.2d at 1873. The Court also explained that the all-elements rule secures the "central functions of the patent claims themselves," *id.* at 30, 41 U.S.P.Q.2d at 1871, while prosecution history estoppel, reinforced by the new rebuttable presumption, "further insulates the doctrine from any feared conflict with the Patent Act." *Id.* at 34, 41 U.S.P.Q.2d at 1873. The Court also mentioned factors such as known interchangeability and other criteria relevant to the determination of equivalency.

The notice function of claims was thereby enhanced, for there can be no liability for infringement, even by a clear technologic equivalent, unless every claimed element of the patented device is appropriated and used, in the same role as in the claim, without encountering estoppel. A device that does not meet all of these legal and factual criteria does not incur liability despite technologic equivalency. However, a device that is unable to omit or substantially change even one claimed element, and that is not released by the prosecution history, has notice of probable liability for infringement.

Thus the Court acted to preserve the purpose of the doctrine of equivalents to prevent "fraud on the patent," while taking specific steps to reinforce the notice function of patent claims. The majority opinion remains silent on this important action to sharpen application of the doctrine of equivalents while preserving the principle of its availability. Instead, the majority relies on its "experience" as justification for its changes of law, but makes no mention of the Court's careful balance of controls, or explain why it is inadequate. *See* maj. op. at 24a-25a ("Our decision to reject the flexible bar approach adopted in *Hughes I* comes after nearly twenty years of experience in performing our role as the sole court of appeals for patent matters.") We should use that experience to refine the criteria of equivalency, as the Court expected, instead of eliminating it

entirely, a ruling that bars remedy to the deserving and undeserving alike.

In the complex of risk-laden concerns and uncertainties involving inventions, entrepreneurship, and competition, the doctrine of equivalents weighs on the side of the patentee, for it provides the possibility of protection against close copies which merely skirt the patent's claims. In this way it adds weight to the patent system as an innovation incentive. The majority of this court apparently views the existing balance between inventor and imitator as disadvantageous to the nation, for the court now sets as "paramount" the "notice function" to the would-be competitor. However, the optimum balance between innovator and imitator in a technology-dependent economy involves many considerations in addition to the primacy of notice.

II

THE PATENTS IN SUIT

Applying the pre-*Warner-Jenkinson* law of equivalency, the district court adjudged both the Carroll and Stoll patents to be infringed, the Carroll patent on summary judgment and the Stoll patent by jury verdict. On the prior law, and again on the law of *Warner-Jenkinson*, those judgments were twice affirmed on appeal. Today the merits are not reached, simply because the claims of both patents were rewritten in narrower form before they were examined. For the Carroll patent, Festo added an element to the claims before reexamination. For the Stoll patent, Festo rewrote improper multiple dependent claims, dropping the broader claim. In neither the Carroll nor the Stoll patent were the elements at issue amended; however, in both patents estoppel is now held to be complete, barring any assertion of equivalency as to these elements.

The Carroll Patent

Festo requested reexamination of the Carroll patent in light of German Patent No. 1,982,379, which had not been included

in the original examination. After the reexamination request was granted but before reexamination on the merits, Festo cancelled original claim 1 and added a new claim which differed from the original claim in several ways including the addition of "a pair of resilient sealing rings." Festo did not explain these changes; nor was explanation required, for the changes were made before action by the examiner.

The majority holds that the presumption arises that the sealing rings were added to the claim for reasons of patentability, for the prosecution record does not state why this amendment was made. However, the majority limits the rebuttal evidence to the prosecution record that produced the presumption. *See* maj. op. at 47a ("We therefore hold that a narrowing amendment will give rise to prosecution history estoppel unless the prosecution history of the patent reveals that the amendment was made for a purpose unrelated to patentability concerns.") Since the prosecution history is silent as to the reason for the amendment, Festo is held unable to rebut the presumption.

Festo points out on this appeal that sealing rings were described in the cited German patent, and thus that this element did not impart a distinction from the prior art. Festo's argument during reexamination related to other components of the device:

> [The cited references] do not disclose the overall structure of the device for moving articles set forth in the claim, and in particular do not disclose 1) a *plurality* of cylindrically-shaped permanent magnets mounted on a central mounting member and *spaced axially apart from each other* . . . 2) an exterior body including a *plurality* of annularly shaped permanent magnets *spaced apart from each other* and 3) *a pair of cushion members formed of resilient material* . . .. [Emphases in original]

The examiner mentioned several components of the combination in the "Reasons for Allowance," but not the sealing rings:

> Claims 3, 4, 5, 6, and 9 are deemed allowable over the prior art of record, including German Patent No. 1,982,379 because the prior art does not teach or render obvious the claimed combination which includes the plurality of magnets, end members, and cushion members in the claimed relationship.

The sealing rings raise the only issue with respect to infringement under the doctrine of equivalents; all of the other claim elements were conceded to be literally present in the SMC devices.

The sealing rings were not amended during prosecution. No argument by the applicant was directed to the sealing rings, and no issue of patentability concerning the sealing rings was raised by the examiner. Nonetheless, the majority holds that it suffices as a "narrowing amendment" that the claim as a whole was narrowed when the sealing rings were added before examination. Applying the majority's new rule that any narrowing amendment entirely bars access to equivalency, the factual question of equivalency between the claimed pair of sealing rings and the SMC two-way sealing ring is not reached.[20] Thus the majority holds that the addition of the sealing rings to the Carroll claims before examination, without more, immunizes the SMC devices from the charge of infringement under the doctrine of equivalents.

The Stoll Patent

---

[20] In the district court the issue of equivalency of the sealing rings was based on the all-elements rule, a question that is mooted by the majority's ruling that equivalency can not be asserted at all.

The Stoll patent application was filed in the United States as the English translation of a prior German patent application. In the first action in the United States, the examiner rejected the application under 35 U.S.C. § 112 ¶ 1, stating: "Exact method of operation unclear. Is device a true motor or magnetic clutch?" The examiner also objected to claims 4-12, which apparently were filed in the same form as in the foreign priority application, as being in improper multiple dependent form, citing 35 U.S.C. § 112 ¶ 2 [sic: ¶ 5?]. The examiner also listed three references as "believed pertinent"; the references were not discussed and no rejection was made on prior art.

In response, Stoll explained the method of operation and amended the specification accordingly. Stoll also rewrote the claims, eliminating the improper multiple dependent form. Stoll cancelled original claim 1 and filed a new independent claim that included the subject matter of original dependent claims 4 and 8. From claim 4 Stoll took "first sealing rings located axially outside said guide rings," and from claim 8 Stoll took "a cylindrical sleeve made of a magnetizable material and encircles said tube." Thus in the new claim these elements were more narrowly claimed than in original claim 1, although not more narrowly than in original dependent claims 4 and 8. The record states no reason for these changes.

Stoll also submitted two German patents that had been cited during examination of the corresponding German application, with the following explanation:

> Applicant wishes to make of record German Offenlegungsschrift No. 27 37 924 and German Gebrauchsmuster No. 19 82 379. These references were cited in the first Office Action received in the corresponding German application. These references are obviously clearly distinguishable over the subject matter of the claims now present in this application. Accordingly, further comment about the subject matter of these references is believed

> unnecessary. It is clear that neither of these references discloses the use of structure preventing the interference of impurities located inside the tube and on the outside of the tube while the arrangement is moved along the tube.

The majority finds that the above reference to "structure preventing the interference of impurities" relates to the sealing rings; nonetheless, the majority also rules that all access to equivalency is barred because the broadest claim was "narrowed" by amendment, although the scope of the elements as stated in the original dependent claims was not at issue. Disposing of Festo's argument that the prosecution history shows that the claims were rewritten in response to the rejection for improper multiple dependent form, the majority holds that "Because a claim will not issue unless it satisfies the requirements of section 112, an amendment made to satisfy the statute is an amendment made for a reason related to patentability." Maj. op. at 52a. Thus this amendment is held to bar access to the doctrine of equivalents because the rejection was based on a statutory formal requirement.

The court does not reach the questions of identity of function, way, and result, or the insubstantiality of the change, or interchangeability in the context of the invention. The formulaic framework of the majority opinion thus vitiates the doctrine of equivalents, without respect to the merits of any particular claim.

The Retroactive Effect

It has been routine practice for patent solicitors to initially present broad claims to an invention, in the expectation of honing the claims in interaction with the examiner. As very few patent applications traverse the PTO without amendment or argument,[21] few issued patents will be free of the

---

[21] Patent examination practice requires the examiner to cite the closest

(continued...)

consequences of these changes in the law, for the majority has declined to act on the warnings against derogation of vested rights and expectancies, and has declined to make this decision applicable only prospectively. *See Warner-Jenkinson*, 520 U.S. at 41-2, 41 U.S.P.Q.2d at 1876 (Ginsburg, J., concurring).

In addition, a profound inequity is now created between those patents that may fortuitously have managed to avoid amendment or argument as to all elements subject to imitation by insubstantial change, and those that have not. The practical significance has not been explored in the majority opinion, and indeed this aspect was not briefed or argued.

III

INNOVATION AND COMPETITION POLICY

Although various policy arguments were briefed to the Court in the *Warner-Jenkinson* appeal, the Court declined to enter the policy arena:

> The lengthy history of the doctrine of equivalents strongly supports adherence to our refusal in *Graver Tank* to find that the Patent Act conflicts with that doctrine. Congress can legislate the doctrine of equivalents out of existence any time it chooses. The various policy arguments now made by both sides are thus best addressed to Congress, not this Court.

520 U.S. at 28, 41 U.S.P.Q.2d at 1871. The majority disregards this admonition and, despite the absence of development of

---

[21] (...continued)
references found in a search of the prior art. *See* Manual of Patent Examining Procedure § 706. The applicant then must respond and explain why the invention is patentable over the references, and may amend, add, cancel, and rewrite claims. MPEP § 714.02. Informal inquiry reports that for simple inventions, at most 10-15% of patents are granted without claim amendment, although very rarely without argument. For complex inventions the percentage of unamended applications is vanishingly small.

policy issues on this appeal, legislates a new balance between inventor and imitator. The optimum balance is critical to the nation's economy.

The modern industrial economy is driven by technologic innovation. It has long been understood that technological advance and industrial vigor flow from legal and economic policies that encourage invention and support investment in the products of invention. The extensive scholarship in this area is founded on the classical studies of Joseph A. Schumpeter, *Capitalism, Socialism and Democracy*, Harper, New York (3d ed.1950) (recognizing the economic impact of patent-based innovation as new industries and new goods displace the old), and has been broadly explored, *e.g.*, Kenneth J. Arrow, *Economic Welfare and the Allocation of Resources for Invention* (1962) (discussing intellectual property rights in a free enterprise economy); Robert Solow, *Technical Change and the Aggregate Production Function*, 39 Rev. Econ. & Stat. 312 (1957).

The encouragement of invention and investment in new ideas and their embodiments is a primary function of patent systems, aimed at the national purpose of development of new industries, improved productivity, increased employment, and overall economic growth as well as technologic advance. There is burgeoning modern scholarship directed to studies of invention, investment, and patent systems, generally building on the work of William D. Nordhaus, *Invention, Growth, and Welfare: A Theoretical Treatment of Technological Change*, M.I.T. Press, Cambridge (1969), and other scholars such as Kenneth M. Dam, *The Economic Underpinnings of Patent Law*, 23 J. Leg. Studies 247 (1994); David Silverstein, *Patents, Science and Innovation: Historical Linkages and Implications for Global Technological Competitiveness*, 17 Rutgers Computer & Tech. L.J. 261 (1991); and Friedrich-Karl Beier, *The Significance of the Patent System for Technical, Economic and Social Progress*, 11 Int'l Rev. Indus. Prop. & Copyright L. 563 (1980). Critical attention has been given to aspects such as

the nature of the technology, the rate of technologic change in the particular field, the maturity of the field, the cost of invention and development for various technologies, market risks and competitive structures, the ease and cost of imitation, and the choice between disclosure in patents and maintaining the technology in secrecy. International patenting and trade aspects have been explored, as well as the cost of patenting and the cost of enforcement. *E.g.*, Nancy T. Gallini, *Patent Policy and Costly Imitation*, 32 RAND J. Econs. 56 (1992) (discussing factors such as licensing policy and technological difficulties); Richard J. Gilbert & David M.G. Newberry, *Preemptive Patenting and the Persistence of Monopoly*, 72 Am. Econ. Rev. 514, 519, 522 (1982) (industry-specific conditions such as the existence of patentable substitutes and cross-licensing, as well as costs of litigation, affect strategic behavior).

The field of innovation study has evolved to include such complexities as "sequential" innovation, wherein one invention follows from the disclosure of another, *e.g.*, Jerry R. Green and Suzanne Scotchmer, *On the Division of Profit in Sequential Innovation*, 26 RAND J. Econs. 20 (1995) (pointing out that patent length and breadth play a different role when innovation is sequential); G.M. Grossman and E. Helpman, *Quality Ladders in the Theory of Growth*, 58 Rev. Econ. Stud. 43 (1991) (discussing how investment in sequential innovation drives economic growth).

It is well recognized that all of these aspects have varying weights, and that the circumstances surrounding the development and utilization of intellectual property are extremely diverse. Indeed, commentators complain that a single patent policy and patent law are unsuited to the range of scientific and commercial activity in today's economy.

Thus scholarship is providing rigor to understanding the role of intellectual property in innovation/competition policy, even as the limitations of economic models of invention, risk, and investment are recognized. Scholars writing in this field tend to introduce their analyses with a salute to complexity and an

apology for their simplifications. However, within the growing body of scholarship, studies of the relationship between industrial innovation and optimal patent policy weigh against the majority's policy decision here. A paper entitled *Optimal Patent Design and the Diffusion of Innovations*, Carmen Matutes, Pierre Regibeau & Katherine Rockett, 27 RAND J. Econs. 60, 78 (1996), concludes that "the optimal scope policy implies that inventors of basic innovations obtain protection on applications that they have not yet fully worked out. This would probably require a more lenient review of claims than is the current practice." Edmund W. Kitch in *The Nature and Function of the Patent System*, 20 J.L. & Econ. 265 (1977) proposes that optimum patent policy should provide sufficiently broad scope to the inventor who opens a new field, to provide adequate economic incentives while avoiding duplication of effort and discouraging recourse to secrecy. D.G. McFetridge and M. Rafiquzzaman in *The Scope and Duration of the Patent Right and the Nature of Research Rivalry*, 8 Research in Law & Economics: The Economics of Patents and Copyrights 91, 104 (1986) discuss how the existence of non-infringing substitutes alters the benefit gained by an inventor, necessarily skewing incentives to invest.

It is generally agreed that long-term economic growth requires a policy framework that encourages the creation and commercialization of new technologies, as contrasted with a policy that facilitates appropriation of the creative product, lest the creative product dry up in the face of too-easy appropriation. "Knowledge capital," secured by intellectual property rights, now rivals the traditional economic components of labor productivity, capital formation, and natural resources, as the foundation of economic growth.

The inventor and the imitator are affected by quite different economic considerations. The innovator takes the risk of commercial success or failure of new things in new markets—the risk of unfulfilled expectations, obsolescence, regulation, technologic failure. The imitator bears none of

these risks; he is interested only in the successful products, not in the failures; he is interested only in the profitable products, not the marginal ones; he moves in only after the invention has been made and tested and the market developed, and can operate at lower margins. The patent system provides weight on the side of the innovator, aided by the doctrine of equivalents and its inhibition of close copying, establishing an incentive whose value has been tested by time. However, it is also well recognized that competition is essential to a healthy economy. Achieving the optimum balance of these factors is of vital national importance. A major policy change in the foundational law affecting innovation and competition should not be made without adequate study of its consequences.

Although there is burgeoning literature on technologic intellectual property rights, the doctrine of equivalents has not, of itself, been a major focus of legal and economic scholarship. I suspect this is due to the complexity of the issue, the variety of factual applications, the diversity of technologies, the breadth of interacting influences on patentees' and competitors' activities, and the complex nuances of competition at the edge of the products of others. A few authors, however, have critically considered the doctrine of equivalents. For example, Robert P. Merges & Richard R. Nelson, in *On the Complex Economics of Claim Scope*, 90 Colum. L. Rev. 839 (1990), observe that the doctrine of equivalents tends to diminish incentives for competitors, but point out that the doctrine also encourages competitors to make "leapfrogging" advances instead of simply copying at the edge of the claims. The questions raised by the doctrine of equivalents are not quite the same as those of patent "scope." The issue of "scope" is directed to aspects of literal claim breadth, as discussed by Kitch, supra. The question of equivalency is quite different. Infringement under the doctrine of equivalents is available only against what is indeed the same invention with only insubstantial change, as contrasted with issues of broad claims for broad but undeveloped concepts. Equivalency is a

judge-made response to the pernicious literalism of the system of claiming, not an enlargement of the scope of the invention.

My colleagues in the majority make the error of the "simplified model," which assumes a continuing supply of new products, and ignores the prior steps of invention and commercialization. The majority concludes that the elimination of liability for infringement based on equivalency will be of public benefit: "The public will be free to improve on the patented technology and design around it . . .. [C]ertainty will stimulate investment in improvements and design-arounds." Maj. op. at 30a. However, the assumption that placing new technology in the public domain is always the optimum path to industrial growth is not supported by experience. Empirical studies have added rigor to the common sense knowledge that reduced profit opportunity affects the supply of capital to launch a new technology, and often the creation of the technology itself. *See, e.g.*, Joshua Lerner, *The Importance of Patent Scope: an Empirical Analysis*, 25 RAND J. of Econ. 319 (1994) (reviewing 173 venture- backed biotechnology firms and reported that an increase of one standard deviation in average patent scope produced a 21% increase in the firm's value).

The present patent law has supported a blossoming of technology-based industry in a competitive environment that is conspicuous for its entrepreneurial vigor. The balance among inventor, investor, competitor, and consumer, and the effect of the doctrine of equivalents on that balance, is not explored in the parties' briefs and had sparse amicus participation, for it was not at issue. Of course no patentee would choose to rely on the doctrine of equivalents to support commercial investment. The public and private interests served by the doctrine of equivalents derive from its deterrence of close imitation, thereby helping to assure to the patentee the benefit of the

invention,[22] while obliging would-be competitors to advance the technology instead of simply skirting the edge of the claims. Although its influence is not easy to quantify, it is generally accepted that the doctrine contributes to an industrial policy that seeks to support technologic innovation.

CONCLUSION

The policy underlying the doctrine of equivalents has been sustained by the absence of alternative remedy in meritorious cases, when the patentee's invention has indeed been taken by trivial change from the letter of the claims. By enabling remedy when remedy is warranted, the doctrine adds strength to the system of patents. Today's technological vitality arose on a patent system that included the doctrine of equivalents. A change in the balance between inventor and imitator requires careful understanding of the consequences; a preference for the neatness of precise "notice" does not justify major tinkering with the overall strength of the patent system, with unknown consequences. This court's new recipe for risk-free copying of patented inventions presents policy considerations of national import.

The doctrine of equivalents has not been deemed superfluous as an instrument as justice, and not until today has it been deemed "unworkable" by this court. The Federal Circuit's sua sponte change in this law is a change in industrial policy that requires public discussion in advance of, not after, the law has been changed.[23] This court's initiative flows uncomfortably as

---

[22] The majority exhibits either hubris or humor in explaining that the patentee who is denied access to equivalency is also benefitted because he is spared the cost of enforcing his patent against the equivalent product that has undercut his prices and taken his market. Maj. op. at 30a.

[23] My colleagues' complaint about the frequency of issues of equivalency in litigation must be viewed in context. Less than a hundred patent cases are fully tried each year, and most of the few hundred appeals to the Federal Circuit reach us on summary disposition. Infringement cases often raise

(continued...)

a ruling that affects myriad vested rights, on a novel legal theory, without briefing or argument.

---

[23] (...continued)
issues of equivalency, usually offered as an alternative theory to literal infringement. These are very small numbers in light of over 1,700,000 unexpired patents, of which 1,200,000 are maintained and in force. Cases in litigation do not provide courts with a balanced picture of the workings of commerce. Litigants rarely explore national policy, as committed parties battle for high stakes. Such cases do not present an objective exposition of the overriding national interest.

APPENDIX B

UNITED STATES COURT OF APPEALS FOR THE FEDERAL CIRCUIT

FESTO CORPORATION,

Plaintiff-Appellee,

v.

SHOKETSU KINZOKU KOGYO KABUSHIKI CO., LTD., a/k/a SMC Corporation, and SMC Pneumatics, Inc.,

Defendants-Appellants.

No. 95-1066.
April 19, 1999.

On remand from the United States Supreme Court

Before: RICH, NEWMAN, and MICHEL, Circuit Judges.

Opinion by Judge Newman

PAULINE NEWMAN, Circuit Judge.

This case returns to us upon grant of certiorari by the United States Supreme Court, followed by vacatur and remand for further consideration in light of the Court's decision in *Warner-Jenkinson Co. v. Hilton Davis Chemical Co.*, 520 U.S. 17, 117 S. Ct. 1040, 41 USPQ2d 1865 (1997).[1] We now affirm the district court's judgment with respect to infringement of the Carroll patent, vacate and remand for further proceedings with respect to the Stoll patent, and reinstate our prior decision on the other issues.

---

[1] *Shoketsu Kinzoku Kogyo Kabushiki Co. v. Festo Corp.*, 520 U.S. 1111, 117 S. Ct. 1240 (1997).

BACKGROUND

Festo Corporation sued Shoketsu Kinzoku Kogyo Kabushiki Co. (also known as SMC Corporation) and SMC Pneumatics, Inc. (collectively "SMC") in the United States District Court for the District of Massachusetts, for infringement of two patents relating to magnetically coupled rodless cylinders. Rodless cylinders are used to repeatedly move articles a short distance, for example in assembly lines. By pneumatic or other fluid pressure a piston is moved within a cylinder, and the movement is translated by coupling of the piston to a yoke or other structure outside of the cylinder, which in turn carries the article to be moved.

For magnetic rodless cylinders the piston is not physically attached or yoked to the outer structure, but instead is magnetically coupled to a slidable outer ring or cylinder called the "follower," that carries the article to be moved. When a burst of air or other fluid pressure moves the piston within the cylinder, by magnetic force the follower and its burden are correspondingly moved. The device, separated into its basic components, is pictured as follows:

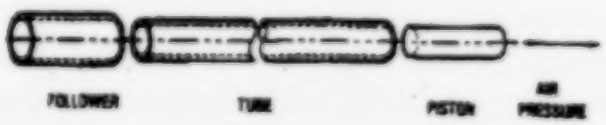

Trial in the district court was preceded by an eleven-day evidentiary hearing before a special master. The master's report was followed by various motions, of which the district court granted Festo's motion for summary judgment that United States Patent No. 3,779,401 (the Carroll patent) was infringed under the doctrine of equivalents. The court also granted SMC's motion for judgment of noninfringement by certain models of its rodless cylinders. Literal infringement by certain other models was not disputed.

The remaining issues were tried to a jury. The jury found that there was infringement of United States Patent No. 4,354,125 (the Stoll patent) on grounds of equivalency, sustained the validity of both the Carroll and the Stoll patents, and assessed damages. The court entered judgment accordingly, denying duly made post-trial motions. *Festo Corp. v. Shoketsu Kinzoku Kogyo Kabushiki Co.*, No. 88-1814-PBS (D. Mass. Feb. 3, 1994).

On appeal of the issues of infringement of the Carroll and Stoll patents and damages, the Federal Circuit affirmed the judgments. *Festo Corp. v. Shoketsu Kinzoku Kogyo Kabushiki Co.*, 72 F.3d 857, 37 USPQ2d 1161 (Fed. Cir. 1995). SMC petitioned for writ of certiorari on two questions, with the following question directed to the doctrine of equivalents (the other question related to procedures involving the special master):

> 1. In a patent case, can the statutory requirement for patent claims (35 U.S.C. § 112, ¶ 2) and the statutory restriction for correcting them (35 U.S.C. § 251, ¶ 4) be nullified by the judicially created doctrine of equivalents?

Following its decision in *Warner-Jenkinson* the Court granted SMC's petition, vacated the Federal Circuit's decision, and remanded the case for further consideration; such a sequence of events is called a "GVR" (grant, vacate, remand). A GVR occurs when "intervening developments, or recent developments that we have reason to believe the court below did not fully consider, reveal a reasonable probability that the decision below rests upon a premise that the lower court would reject if given the opportunity for further consideration, and where it appears that such a redetermination may determine the ultimate outcome of the litigation, . . ." *Lawrence v. Chater*, 516 U.S. 163, 167 (1996). The Court espoused the just purpose of avoiding unequal treatment among cases raising similar issues, to "improve the fairness and accuracy of judicial outcomes." *Id.* at 168. *See also Stutson v. United States*, 516

U.S. 193, 197 (1996) ("a GVR order both promotes fairness and respects the dignity of the Court of Appeals by enabling it to consider potentially relevant decisions and arguments that were not previously before it").

Upon remand this court invited additional briefing of the issues related to the doctrine of equivalents, *Festo Corp. v. Shoketsu Kinzoku Kogyo Kabushiki Co.*, 117 F.3d 1385 (Fed. Cir. 1997), and heard reargument as to both the Carroll and Stoll patents, including new issues of prosecution history estoppel upon which SMC submitted new evidence.

I

THE CARROLL PATENT

The Carroll patent is directed to a magnetic rodless cylinder wherein several cylindrically shaped permanent magnets are disposed on the piston, and the follower is fitted with several annular permanent magnets. The exterior of the device is shown in Figure 1, wherein the cylinder 10 is encircled by the follower bearing permanent magnets of annular shape 28, and having a gripping device 30 which grasps the article to be moved.

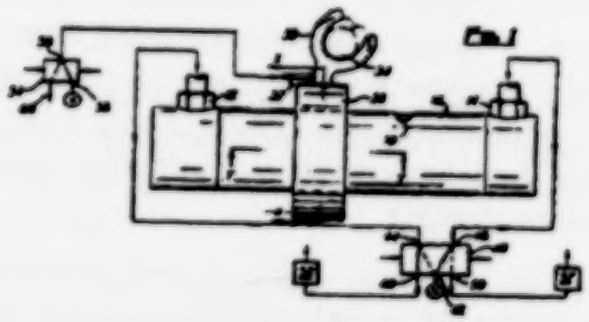

Relevant to this appeal is the Figure 3 section taken at Y-Y of Figure 1, showing piston end member 22 bolted to magnet 20. The piston bears annular grooves 24 which accommodate sealing rings 26 adapted to engage the inner wall of cylinder 10 and form a fluid-tight seal.

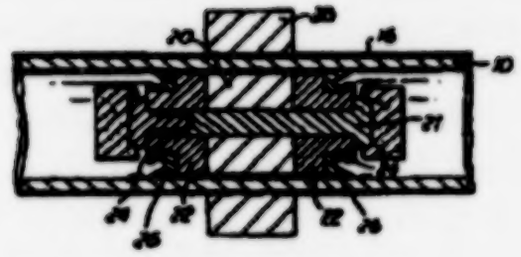

Fig. 3

Reexamined claim 9, the only claim of the Carroll patent in suit, is as follows, with our paragraphing and emphasis added to the subject matter relevant to infringement by equivalency:

> 9. A device for moving articles, which comprises:
>
> a hollow cylinder formed of non-ferrous material and having opposite axial ends;
>
> a piston mounted in the interior of the hollow cylinder and reciprocatingly slidable therein, the piston including a central mounting member disposed axially in the cylinder,
>
> a plurality of cylindrically-shaped permanent magnets mounted on the central mounting member and spaced apart axially from each other, each magnet having a bore formed axially there-through for receiving the central mounting member,
>
> at least one pair of end members mounted on the central mounting member and disposed on opposite axial sides of the plurality of magnets,
>
> a pair of cushion members formed of resilient material, the cushion members being situated near opposite axial ends of the central mounting member to help prevent damage to

> the piston when the piston contacts an axial end of the cylinder,
>
> *and a pair of resilient sealing rings situated near opposite axial ends of the central mounting member and engaging the cylinder to effect a fluid-tight seal therewith*;
>
> a body mounted on the exterior of the hollow cylinder and reciprocatingly slidable thereon,
>
> the body including a plurality of annularly shaped permanent magnets surrounding the cylinder and spaced apart from each other,
>
> the permanent magnets of the piston and body being polarized so as to magnetically couple the body to the piston whereby movement of the piston inside the cylinder causes a corresponding movement of the body outside the cylinder,
>
> the body further including means provided thereon for holding on the body an article to be moved; and
>
> means for controlling the admission of pressure fluid into the cylinder and exhaust fluid from the cylinder for moving the piston in the cylinder,
>
> the attractive forces between the permanent magnets of the piston and the body being such that movement of the piston causes corresponding movement of the body below a predetermined load on the body and such that above said predetermined load movement of the piston does not cause corresponding movement of the body.

All of the subject matter of claim 9 was conceded by SMC to be literally present in the accused SMC devices, except for the pair of sealing rings. Instead of a pair of sealing rings situated at opposite ends of the piston, the SMC devices have a single two-way sealing ring at the end of the piston that is in contact with the pressure fluid. The SMC devices also have guide rings situated at each end of the piston.

In *Warner-Jenkinson* the Court, after concluding that the doctrine of equivalents should be preserved,[2] focused on two aspects thereof: the all-elements rule and prosecution history estoppel. SMC states that the all- elements rule was violated by the district court's decision, and that the Court's new presumption of prosecution history estoppel precludes a holding of infringement, whether or not the all-elements rule also requires a decision in its favor. We reconsider the district court's judgment with respect to both of these aspects.

A

THE ALL-ELEMENTS RULE

1. The Prior Proceedings

The substitution of a two-way sealing ring for the claimed pair of sealing rings was the basis of the district court's summary judgment of infringement of claim 9 under the doctrine of equivalents. SMC did not dispute that the two-way sealing ring effects a fluid-tight seal with the cylinder, the function stated in the claim clause directed to the sealing rings. SMC did not dispute the interchangeability of the two-way sealing ring and the pair of sealing rings, or that the claimed sealing function is achieved in the same way and with the same result. SMC's only argument to the district court was that the all-elements rule does not permit a finding of equivalence, as a

[2] The virtually unanimous views of *amici curiae* the United States and technology-based industry were that the doctrine of equivalents should be preserved.

matter of law, because the accused SMC devices do not contain two sealing rings or two equivalent elements.

The district court did not adopt SMC's view of the all-elements rule. Citing precedent wherein the all-elements rule was found to be satisfied when the function of the claimed element was performed but not by a direct correspondence of components, the district court held that the substitution of a two-way sealing ring, which performs the same function as the pair of sealing rings, is in compliance with the all-elements rule. The district court explained:

> To constitute an infringement, the accused device must contain each and every limitation of the claim or its substantial equivalent. *Vaupel [Textilmaschinen KG v. Meccanica Euro Italia S.P.A.*, 944 F.2d 870, 20 USPQ2d 1045 (Fed. Cir. 1991)], 944 F.2d at 879. "An equivalent must be found for every limitation of the claim somewhere in an accused device, but not necessarily in a corresponding component, although that is generally the case." *Corning Glass Works v. Sumitomo Elec. U.S.A., Inc.*, 868 F.2d 1251, 1259 (Fed. Cir. 1989) (adding negative dopant to the cladding is equivalent to adding positive dopant to the core in the context of the claimed invention).

Since equivalency was not disputed, and we agree that the claimed test is met of substantially the same function, way, and result, the district court granted Festo's motion for summary judgment of infringement.

On this rehearing of its appeal to the Federal Circuit SMC again does not dispute the fact of equivalency, but again argues that the all-elements rule bars a finding of infringement. Citing *Pennwalt Corp. v. Durand-Wayland, Inc.*, 833 F.2d 931, 4 USPQ2d 1737 (Fed. Cir. 1987) (en banc) and ensuing Federal Circuit decisions, as now reinforced in *Warner-Jenkinson*,

SMC argues that the all-elements rule precludes any liability under the doctrine of equivalents because the accused SMC devices do not contain a pair of sealing rings or two distinct elements that are the same as or equivalent to the pair of sealing rings.

In reviewing a grant of summary judgment the appellate court must decide, on the record presented to the trial court, whether the movant is entitled to judgment as a matter of law. Fed. R. Civ. P. 56(c). Thus the evidence is viewed in the light most favorable to the non-movant, drawing factual inferences and resolving factual doubts in favor of the non-movant. *See, e.g., EMI Group North America, Inc. v. Intel Corp.*, 157 F.3d 887, 891, 48 USPQ2d 1181, 1184 (Fed. Cir. 1998) (citing *Anderson v. Liberty Lobby, Inc.*, 477 U.S. 242, 254 (1986)). Infringement in terms of the doctrine of equivalents is amenable to summary judgment when on the correct law, and undisputed facts or the non-movant's supportable version of the facts, the movant's position must prevail. *See Warner-Jenkinson*, 520 U.S. at 39 n. 8, 41 USPQ2d at 1875 n. 8 (summary judgment is proper when no reasonable jury could find the elements to be equivalent).

In affirming the district court's judgment we cited *Dolly, Inc. v. Spalding & Evenflo Cos.*, 16 F.3d 394, 398, 29 USPQ2d 1767, 1769 (Fed. Cir. 1994) and *Intel Corp. v. United States Int'l Trade Comm'n*, 946 F.2d 821, 832, 20 USPQ2d 1161, 1171 (Fed. Cir. 1991) for the principle that the all-elements rule may be satisfied although there is not one-to-one correspondence between each element of the claimed invention and each component of an accused device depending on the facts of the particular substitution. We first consider whether this principle continues to be viable in the wake of *Warner-Jenkinson*.

2. Precedent

In *Warner-Jenkinson* the Court reaffirmed the precept of the doctrine of equivalents that "a product or process that does not

literally infringe upon the express terms of a patent claim may nonetheless be found to infringe if there is 'equivalence' between the elements of the accused product or process and the claimed elements of the patented invention." 520 U.S. at 21, 117 S. Ct. at 1045, 41 USPQ2d at 1865. Thus the Court responded to the concerns expressed by the *amici* that the law continue to limit this opportunity for "fraud on the patent," the words of *Graver Tank*, while guarding against undue breadth of the doctrine by confirming that it is the separate claim elements for which equivalency is determined, and not the invention as a whole:

> Each element contained in a patent claim is deemed material to defining the scope of the patented invention, and thus the doctrine of equivalents must be applied to individual elements of the claim, not to the invention as a whole.

520 U.S. at 29, 117 S. Ct. at 1049, 41 USPQ2d at 1871.

The invention-as-a-whole criterion was discarded by the Federal Circuit en banc in its decision in *Pennwalt*, wherein the court adopted the all-elements rule. In the decade since *Pennwalt* the Federal Circuit has applied the rule in diverse factual situations and has refined its application accordingly. Thus in *Corning Glass Works v. Sumitomo Electric U.S.A., Inc.*, 868 F.2d 1251, 9 USPQ2d 1962 (Fed. Cir. 1989) the court elaborated that the accused device must contain every claim element, but "not necessarily in a corresponding component, although that is generally the case." *Id.* at 1259, 9 USPQ2d at 1968. Discussing the all-elements rule in terms of claim limitations, the court explained:

> A patentee is, for example, free to frame the issue of equivalency, if it chooses, as equivalency to a combination of limitations.

Id. at 1259 n. 6, 9 USPQ2d at 1968 n. 6.[3] In *Corning Glass* the claim limitations were found embodied in the accused device, although there was not directed correspondence between the claimed elements. *See also Perkin-Elmer Corp. v. Westinghouse Elec. Corp.*, 822 F.2d 1528, 1533 n. 9, 3 USPQ2d 1321, 1325 n. 9 (Fed. Cir. 1987) ("a limitation may include descriptive terms").

Applying the rule in *Intel v. ITC*, 946 F.2d at 832, 20 USPQ2d at 1171, the court stated that: "The doctrine of equivalents does not require a one-to-one correspondence between the accused device and that disclosed in the patent." In *Sun Studs, Inc. v. ATA Equipment Leasing Inc.*, 872 F.2d 978, 989, 10 USPQ2d 1338, 1347 (Fed. Cir. 1989), *overruled as to laches by A.C. Aukerman Co. v. R.L. Chaides Const. Co.*, 960 F.2d 1020, 1038-39, 22 USPQ2d 1321, 1333 (Fed. Cir. 1992) (en banc), the court stated: "One-to-one correspondence of components is not required, and elements or steps may be combined without *ipso facto* loss of equivalency." In *Ethicon Endo-Surgery, Inc. v. United States Surgical Corp.*, 149 F.3d 1309, 1317, 47 USPQ2d 1272, 1277 (Fed. Cir. 1998), the court observed that the all-elements rule was not intended to "swallow" the doctrine of equivalents, as could occur if any change in a claim element or limitation were deemed fatal to compliance with the rule. Precedent since *Pennwalt* illustrates that the "all-elements rule" or "all-limitations," in limiting application of the doctrine of equivalents to each claim element or step,[4] does not eliminate access to equivalency in all of the possible circumstances in which the components of an

---

[3] Several Federal Circuit opinions state a preference for the usage "all limitations rule." Although the Court in *Warner-Jenkinson* spoke in terms of elements, we discern no intention to overturn the "all limitations" usage, or to negate the often interchangeable use of these terms in Federal Circuit Precedent.

[4] In *Pennwalt* the omissions that gave rise to the all-elements rule were process steps.

apparatus are realigned or a limitation is changed. The court's experience of diverse claims and inventions in many different situations has imparted depth as well as rigor to the rule.

We discern in *Warner-Jenkinson* no basis for believing that the Court intended to erase this wealth of precedent. The Court explained that in applying the rule it is appropriate to identify "the role played by each element in the context of the specific patent claim." *Warner-Jenkinson*, 520 U.S. at 40, 117 S. Ct. at 1054, 41 USPQ2d at 1875. This analysis "will thus inform the inquiry as to whether a substitute element matches the function, way, and result of the claimed element, or whether the substitute element plays a role substantially different from the claimed element." *Id.*

Compliance with the all-elements or all-limitations rule is determined at the threshold of the equivalency analysis, based on whether each claim element has a counterpart in the accused device or process, as informed by precedent. Compliance with the all-elements rule is a distinct inquiry from that of equivalency in fact; it is a determination of the relationship between the combination claimed and the components of the accused device or process, element by element. The Court in *Warner-Jenkinson* described this rule as a "legal limitation[ ] on the application of the doctrine of equivalents [and] to be determined by the court." 520 U.S. at 39 n. 8, 117 S. Ct. at 1053 n. 8, 41 USPQ2d at 1875 n. 8. Thus we review compliance with the all-elements rule as a question for the court, first identifying the claim elements as a matter of construction of the claim, *see Markman v. Westview Instruments, Inc.*, 517 U.S. 370, 38 USPQ2d 1461 (1996), and then determining the correspondence of these elements, or limitations, with the components or steps of the accused device or process.

3. Application to the Carroll Patent

The district court ruled, upon summary judgment, that the all- elements rule was not violated. The threshold question, on

this GVR review, is whether that ruling was correct in law. The claim 1 "limitation" or "element" at issue in the Carroll patent is stated as follows:

> and a pair of resilient sealing rings situated near opposite axial ends of the central mounting member and engaging the cylinder to effect a fluid-tight seal therewith;

The accused SMC models use, instead of a pair of sealing rings situated at opposite ends of the piston, one two-way sealing ring situated at the end of the piston that contacts the pressure fluid. Either of these configurations effects a fluid-tight seal with the cylinder. SMC argues that by using a single sealing ring a claim element has been eliminated, violating the all-elements rule and thus precluding access to the doctrine of equivalents, whether or not there is equivalency in fact. Festo argues that the claim element is the pair of sealing rings, and that its substitution by a single sealing ring that performs the identical function does not completely eliminate the claim element and thus meets the requirements of the all-elements rule. Festo states that the caution in *Warner-Jenkinson* that "It is important to ensure that the application of the doctrine, even as to an individual element, is not allowed such broad play as to effectively eliminate that element in its entirety," 520 U.S. at 29, 117 S. Ct. at 1049, 41 USPQ2d at 1871, recognized that there may be partial substitution for a claim element, such as by replacing the pair of sealing rings with one two-way sealing ring, in conformity with the all-elements rule.

Warner-Jenkinson teaches that it is appropriate to inquire into the "role" of the pair of sealing rings, and to compare that role with the role of the substituted two-way sealing ring. 520 U.S. at 40, 117 S. Ct. at 1054, 41 USPQ2d at 1875 (considering the role of each element in the context of the claim). Applying this principle, we observe that the role of the pair of sealing rings, as stated in the claim, is to effect a fluid-tight seal with

the cylinder.[5] This role is preserved in the two-way sealing ring of the SMC devices, wherein the claimed function is fully performed by the two-way sealing ring. The claimed pair of sealing rings has not been eliminated in its entirety, but has been substituted with a single two-way sealing ring that fully preserves the function stated in the claim. We therefore again affirm the district court's ruling that the all-elements rule is met by the sealing ring structure in the SMC devices, and that consideration of equivalency *vel non* of this limitation is not barred.

4. Equivalency in Fact

The second step of the analysis, reached when the all-elements requirement has been met, is determination of whether there is in fact equivalency. Even a directly corresponding component is not *ipso facto* an equivalent; modifications that meet the all-elements requirement may nonetheless embody substantial change from the claim limitations and thus avoid equivalency in fact. For example, in *Dolly v. Spalding* the court recognized that "[a]n accused device may infringe under the doctrine of equivalents even though a combination of its components performs a function performed by a single element in the patented invention," 16 F.3d at 398, 29 USPQ2d at 1770, yet the court found no equivalency on the facts of that case.

The factual inquiry starts with determination of the similarities and differences between the claim element and its embodiment in the accused device. Relevant are the classical criteria of whether the function, way, and result are substantially the same. The Court in *Warner-Jenkinson* directed particular attention to the factor of interchangeability,

---

[5] In the SMC devices there are additional rings at each end of the piston, which serve the guiding function of the omitted sealing ring. The district court did not treat this aspect in discussing the Carroll patent, and it is not essential to our

and whether a person skilled in the field of the invention would have known of the interchangeability of the substitution, at the time of the infringement. In its submissions in response to Festo's motion for summary judgment as to the Carroll patent, SMC did not challenge Festo's evidence of technologic equivalency. SMC did not dispute that its two-way sealing ring performs the function of providing a fluid-tight seal, in the same way, with the same result, as the pair of sealing rings. No new material fact has been brought to our attention upon GVR. Thus the ruling of equivalency, on undisputed facts, is sustained.

We turn to the new issue raised by SMC, that of the Court's new presumption of prosecution history estoppel.

B

PROSECUTION HISTORY ESTOPPEL

1. The New Presumption

Prosecution history estoppel is an adaptation of the common law of estoppel to the processes of patent examination. Tracing its origins to *Sutter v. Robinson*, 119 U.S. 530, 541 (1886), the Court in *Warner-Jenkinson* reinforced the equitable rule that one who takes a position in order to obtain a benefit can not later disavow or take an inconsistent position after the requested benefit is obtained based on the position taken.

Patent prosecution is a public record, and after grant of the patent the public has full access to the examiner's objections and the patentee's responses along the path to the grant. The estoppel arises from the examiner's reliance on the applicant's amendments and arguments in response to the examiner's objections, and the public interest in the patent grant imparts to the public the right to invoke an estoppel on the premises of the examination. Thus a patentee can not recover for infringement under the doctrine of equivalents when the asserted equivalent was yielded during the examination process in order to obtain the patent. *See Graham v. John Deere Co.*, 383 U.S. 1, 33

(1966) ("claims that have been narrowed in order to obtain the issuance of a patent by distinguishing the prior art cannot be sustained to cover that which was previously by limitation eliminated from the patent") (cited with approval in *Warner-Jenkinson*, 520 U.S. at 31, 117 S. Ct. at 1050, 41 USPQ2d at 1876).

In *Warner-Jenkinson* the Court reaffirmed the importance of prosecution history estoppel in applying the doctrine of equivalents. The Court explained that the estoppel arises from amendments that were required to be made for reasons of patentability, and established a new presumption that when it is not clear from the prosecution record why an amendment was made, there is a presumption that the amendment was made for reasons of patentability:

> [W]e think the better rule is to place the burden on the patent-holder to establish the reason for an amendment required during patent prosecution. The court would then decide whether that reason is sufficient to overcome prosecution history estoppel as a bar to application of the doctrine of equivalents to the element added by that amendment. Where no explanation is established, however, the court should presume that the PTO had a substantial reason related to patentability for including the limiting element added by amendment.

520 U.S. at 33, 117 S. Ct. at 1051, 41 USPQ2d at 1873. This new presumption of estoppel is "subject to rebuttal if an appropriate reason for a required amendment is established." *Id.* Thus the burden is shifted to the patentee. The court must consider the reason for the amendment and determine whether estoppel arises. The Court explained:

> [I]f the patent-holder demonstrates that an amendment required during prosecution had a purpose unrelated to patentability, a court must

> consider that purpose in order to decide whether an estoppel is precluded.

520 U.S. at 40, 117 S. Ct. at 1054, 41 USPQ2d at 1876. The Court rejected, however, the argument that any amendment whatsoever produces an estoppel, stating that "we see no substantial cause for requiring a more rigid rule invoking an estoppel regardless of the reasons for the change." *Id.* at 32, 117 S. Ct. at 1050, 41 USPQ2d at 1872. The Court stated:

> Where the reason for the change was not related to avoiding the prior art, the change may introduce a new element, but it does not necessarily preclude infringement by equivalents of that element.

Id. at 33, 117 S. Ct. at 1050-51, 41 USPQ2d at 1872.

Although prosecution history estoppel as to the Carroll patent was not an issue in the prior proceedings, in view of the GVR we now consider it. Upon additional briefing, SMC raises the issue of whether the new presumption of *Warner-Jenkinson* arises, based on a document presented to this court by SMC for the first time on this reargument.

2 Reexamination of the Carroll Patent

The relevant prosecution is that of the reexamination. The original claims of the Carroll patent did not mention the sealing rings. Festo introduced the entire claim clause directed to the rings and their function, along with several other changes in the claims, after the Carroll patent was accepted for reexamination. The sealing rings were depicted in Figure 3 of the original patent, see the drawing *ante*, and the written description described the sealing rings as effecting a fluid-tight seal, the function stated in the new claim clause. The other new claim clauses concern subject matter not at issue.

Festo cited as the reason for its reexamination request its own German Patent No. 1,982,379, which had not been cited by either the examiner or the previous patent owner during the

initial examination. The German patent describes rodless cylinders having several of the features of the device described in the Carroll patent, including sealing rings. Festo argued during the reexamination that Carroll's claimed features of the plurality of spaced magnets and the end members and cushions distinguished the Carroll invention from that described in the German patent. The examiner agreed, and in the "Reasons for Allowance" stated:

> Claims 3, 4, 5, 6, and 9 are deemed allowable over the prior art of record, including German Patent No. 1,982,379 because the prior art does not teach or render obvious the claimed combination which includes the plurality of magnets, end members, and cushion members in the claimed relationship.

Carroll patent file history, Paper No. 7.

SMC argues that the Court's new presumption of estoppel bars all recourse to the doctrine of equivalents based on the sealing rings, because the amendment containing the sealing rings was added during reexamination. SMC states that by presenting this amendment Festo yielded all right to assert equivalency as to this element. Festo responds that no estoppel, and no presumption of estoppel, arises because the amendment adding the sealing rings to the claim was voluntary and was not required by an examiner's rejection. Festo points out that such sealing rings were known in the prior art, referring to the German patent as to which the Carroll patent was reexamined. The prosecution history is clear that neither Festo nor the examiner distinguished the German patent based on the sealing rings.

SMC points out that in requesting reexamination Festo made the obligatory representation that a new issue of patentability may be present, and that in granting the request for reexamination the examiner necessarily found that a new issue of patentability was present. Festo answers that the new issue

flowing from German Patent No. 1,982,379 was not related to the sealing rings, referring to the prosecution record which shows lengthy discussion of the magnets and the cushion and end members, but mentions the sealing rings only in a list of changes to the claim. Review of the prosecution history confirms Festo's position that the sealing rings were not discussed in the prosecution of the reexamination application.

SMC nonetheless states that *Warner-Jenkinson* requires that this amendment adding the sealing rings precludes any finding of equivalency relating to the sealing rings. SMC argues that the addition of the sealing rings clause during reexamination should be viewed as if it were required and related to patentability, on the basis that any change to claims is necessarily related to patentability. This position was rejected in *Warner-Jenkinson* when, considering a similar argument, the Court stated that "petitioner reaches too far in arguing that the reason for an amendment during patent prosecution is irrelevant to any subsequent estoppel." 520 U.S. at 30, 117 S. Ct. at 1049, 41 USPQ2d at 1871.

The same argument was discussed in *Hughes Aircraft Co. v. United States*, 140 F.3d 1470, 1476, 46 USPQ2d 1285, 1290 (Fed. Cir. 1998), wherein this court rejected the "contention that *Warner-Jenkinson* requires such a wooden approach to prosecution history estoppel." *See also Litton Systems, Inc. v. Honeywell, Inc.*, 140 F.3d 1449, 1455, 46 USPQ2d 1321, 1325 (Fed. Cir. 1998) (the court must inquire into the reason for the amendment). However, when an amendment is required for reasons of patentability, estoppel arises and the court must determine the extent of the estoppel. *Id.* Further, as the Court noted in *Warner-Jenkinson*, the court may "explore the reason (right or wrong) for the objection and the manner in which the amendment addressed and avoided the objection." 520 U.S. at 33 n. 7, 117 S. Ct. at 1051 n. 7, 41 USPQ2d at 1872 n. 7.

In the large body of Federal Circuit precedent on various aspects of prosecution history estoppel, this court has rigorously held patent applicants to positions taken in order to establish

patentability during prosecution. *See, e.g., Mannesmann Demag Corp. v. Engineered Metal Prods. Co.*, 793 F.2d 1279, 1284-85, 230 USPQ 45, 48 (Fed. Cir. 1986) (the court shall determine the extent of the estoppel in light of the applicant's amendments, statements to the examiner, the prior art that has been distinguished, and the effect of the amendment on the allowance of the claims). However, a voluntary amendment, not accompanied by argument or representations relevant to patentability, does not necessarily generate an estoppel, any more than do the claims as originally filed. *See Warner-Jenkinson, supra.* SMC's position that estoppel is automatic as to any claim limitation added by amendment is not an accurate statement of the holding of *Warner-Jenkinson*.

For the Carroll patent, the voluntary amendment adding the sealing rings was not made in response to a relevant rejection. It is not disputed that the sealing rings were known in the prior art. The sealing rings were not at issue during the reexamination, and neither rejection nor argument was made concerning the sealing rings. The examiner's stated reasons for grant of the reexamined claims were unrelated to the sealing rings. We conclude that prosecution history estoppel does not affect the application of the doctrine of equivalents to the sealing rings.

CONCLUSION

Upon reconsideration, the district court's application of the all-elements rule to the Carroll patent has not been shown to be in error. Prosecution history estoppel does not arise. Equivalency in fact was not disputed. Thus the summary judgment of infringement of the Carroll patent is affirmed.

II

THE STOLL PATENT

The jury found infringement of the Stoll patent in terms of the doctrine of equivalents. On its prior review the Federal Circuit affirmed this judgment, concluding that the jury had

been charged with the correct law, with special attention to the all-elements rule, and that there was substantial evidence whereby reasonable jurors could have reached the verdict of infringement.

Upon GVR rehearing, SMC again argues that the all-elements rule was not met. SMC also raises new issues of estoppel, providing this court with documentary evidence not of record before the trial court. Although we conclude, as we shall discuss, that the all-elements rule was met and that the jury verdict of equivalency was supported by substantial evidence, a new issue has been raised of possible estoppel with respect to the sealing rings element of the Stoll claims. Although Festo cogently objects to the reopening of this issue based on documents that have long been available to SMC (the translation of German patents cited during prosecution), in full implementation of the GVR we have received this new evidence into the appeal record. We now determine that a new issue has been raised which warrants further development, not available *ab initio* on appeal; thus this issue requires remand to the district court. The other issues are resolved upon this reconsideration, as we discuss.

A

THE STOLL INVENTION

The Stoll patent describes and claims an improved magnetic rodless cylinder, illustrated as follows:

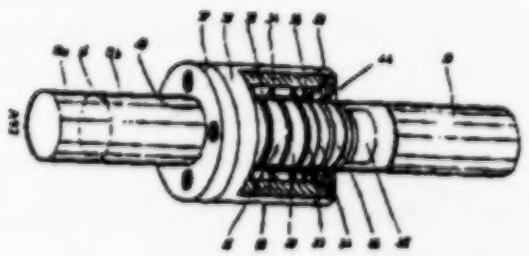

The relevant structure includes cylindrical tube 10 in which moves piston 16. Sealing rings 26 and guide rings 24 are seated in grooves at each end of the piston. The outer cylindrical sleeve is shown at 30. Claim 1 of the Stoll patent follows, with our paragraphing and emphases added to show the elements relevant to this appeal:

> 1. In an arrangement having a hollow cylindrical tube and driving and driven members movable thereon for conveying articles, the improvement comprising
>
> wherein said tube is made of a nonmagnetic material,
>
> wherein said driving member is a piston movably mounted on the inside of said tube, said piston having a piston body and plural axially spaced, first permanent annular magnets encircling said piston body,
>
> said piston further including first means spacing said first permanent magnets in said axial spaced relation, the radially peripheral surface of said magnets being oriented close to the internal wall surface of said tube,
>
> said piston further including plural guide ring means encircling said piston body and slidingly engaging said internal wall and
>
> *first sealing rings located axially outside said guide rings for wiping said internal wall as said piston moves along said tube to thereby cause any impurities that may be present in said tube to be pushed along said tube so that said first annular magnets will be free of interference from said impurities,*

wherein said driven member includes a cylindrical sleeve made of a magnetizable material and encircles said tube,

said sleeve having plural axially spaced second permanent annular magnets affixed thereto and in magnetically attracting relation to said first permanent annular magnets,

and second means spacing said second permanent annular magnets in said axially spaced relation, the radially inner surface of said magnets being oriented close to the external surface of said tube,

said sleeve having end face means with second sealing rings located axially outside said second permanent annular magnets for wiping the external wall surface of said tube as said driven member is moved along said tube in response to a driving movement of said piston to thereby cause any impurities that may be present on said tube to be pushed along said tube so that [said] second permanent annular magnets will be free of interference from said impurities.

SMC argues that the all-elements rule is not met by the judgment of infringement as to two aspects; first, because in the SMC devices the first sealing rings are substituted with a single two-way sealing ring, and second, because the cylindrical sleeve in the SMC devices is not made of a magnetizable material. SMC also argues that the factual questions of equivalency were wrongly decided, and that prosecution history estoppel precludes infringement. Festo disputes these arguments, states that the all-elements rule was correctly stated and applied, that there was no issue of prosecution history estoppel, and that there was substantial evidence supporting the jury verdict. Festo argues that nothing in *Warner-Jenkinson*

warrants rejecting this verdict and the district court's decision denying SMC's post-trial motions for judgment as a matter of law.

B

THE ALL-ELEMENTS RULE

SMC stated in its petition for certiorari that at the trial, and in instructing the jury, the district court applied the invention-as-a-whole standard of equivalency instead of the all-elements rule, and that this fundamental flaw pervaded the prior appeal to the Federal Circuit. That is incorrect. The all-elements rule was the law that was applied at trial and on appeal. Argument as to this issue dominated the motions for summary judgment, the trial to the jury, the arguments on post-trial motions, and the prior appeal to the Federal Circuit.

At the trial of infringement of the Stoll patent the district court instructed the jury on the all-elements rule as follows:

> Now, let me move on to the second step and explain that a little more. The second step is to decide whether each limitation in the properly construed claims is found in the accused device. Liability for infringement requires that an accused device contain every limitation of a claim or its substantial equivalent.
>
> Let me repeat that. Liability for infringement requires that an accused device contain every limitation of a claim or its substantial equivalent.
>
> Here the claim of infringement is a claim under what you have now heard referred to many times as infringement under the doctrine of equivalence. Infringement of a patent claim can be found by way of the doctrine of equivalence.

> It is insufficient for proof of infringement under this doctrine of equivalence that the accused devices are equivalent overall to the claimed invention.

SMC argues that this instruction did not adequately state the law as now set forth in *Warner-Jenkinson*, stating in its brief on reconsideration that "the jury instruction would not be sufficient today since it does not include a caution ('special vigilance') against any theory which eliminates a claim element." However, it is hard to imagine a clearer caution against elimination of a claim element, or a plainer statement of the all-elements rule, than was stated by the district court. The technological facts concerning the embodiment of the claimed elements in the SMC devices were presented by witnesses and argued by counsel in the context of the all-elements rule, whose emphasis pervaded the trial.

We do not discern grounds for reversal or a new trial based on any error in the jury instructions or the law as applied by the district court upon post- trial motions. The instructions state the correct law, no objection was made to these instructions at the trial, and the law as stated does not differ from that of the Court in *Warner-Jenkinson*. Nor was any objection made to the presentation of this question to the jury upon these instructions. We turn to review of the jury verdict, as did the district court, upon the principles of judgment as a matter of law.

C

THE ISSUES OF EQUIVALENCY

The jury verdict was that claim 1 of the Stoll patent was infringed under the doctrine of equivalents. The district court entered judgment accordingly. We have again reviewed the evidence to ascertain whether the jury's express or implicit findings were supported by substantial evidence, and whether the legal conclusion represented by the verdict was adequately based on supported findings, accompanied by correct application of the law to the facts. *See Shatterproof Glass*

Corp. v. Libbey-Owens Ford Co., 758 F.2d 613, 619, 225 USPQ 634, 636 (Fed. Cir. 1985) ("In reviewing a decision denying a motion for judgment notwithstanding the verdict, we do not approach the issues as if there had been no trial. We review the evidence as a whole, and ascertain whether the verdict is in accordance with law, and whether there was substantial evidence in support of the jury's verdict.")

1. The Sealing Rings

SMC argues that the claim term "first sealing rings" designates two elements, and that the all-elements rule requires the substitution of two separate elements that are the same or equivalent elements. As discussed in connection with the Carroll patent, the all-elements rule requires that a claim element not be "eliminated in its entirety," *Warner-Jenkinson*, 520 U.S. at 29, 117 S. Ct. at 1049, 41 USPQ2d at 1871, and within that framework the rule does not preclude all counterpart embodiments except one-to-one correspondence. *See* Part I.A *ante*.

The issues as to the Stoll patent, with respect to the sealing rings, are not the same as for the Carroll patent. The Stoll claimed element of the "first sealing rings" is associated with the additional function of the wiping of impurities to avert contamination of the magnets. SMC states that when one of the sealing rings is absent this function is not performed. The written description states that the wiping function is also performed by the adjacent guide rings:

> any such impurities are pushed along in front of piston 16 by the sealing rings 26 or—should they manage to get past these—by the sliding guide rings 24, so that the annular magnet arrangement is invariably faced with a clean section of the internal tube wall.

Stoll patent, col. 3, lines 51-55.

SMC argues that this multiplicity of rings and functions distinguishes the Stoll invention from that of the Carroll patent, such that even if the all- elements rule was met as to Carroll, it is violated as to Stoll. Festo states that the evidence supports the contrary conclusion.

Festo's witnesses testified to the correspondence between the first sealing rings and the SMC two-way sealing ring, and that the guide rings in the SMC devices also perform a wiping function as taught in the specification. Inquiry under the all-elements rule is "[informed by] an analysis of the role played by each element in the context of the specific patent claim." *Warner- Jenkinson*, 520 U.S. at 40, 117 S. Ct. at 1054, 41 USPQ2d at 1875. The role of the sealing rings and the guide rings in wiping the cylinder was fully explored at the trial, where SMC did not dispute that the wiping function was performed in the SMC devices.

The verdict is in accord with the precepts of *Warner-Jenkinson*, for the claimed element of the "first sealing rings" was not eliminated in its entirety, and the limitation of the wiping function was shown to be performed. *See Corning Glass*, 868 F.2d at 1259, 9 USPQ2d at 1968 ("An equivalent must be found for every limitation of the claim somewhere in an accused device, but not necessarily in a corresponding component, although that is generally the case"). We conclude that the threshold premise of the jury verdict, that the all-elements rule was met, was supported and must be sustained.

On the question of equivalency in fact, Festo's mechanical expert Dr. Barry Wolf, and the inventor Dr. Stoll, testified to the facts of interchangeability of the ring structures, and the substantial identity of function, way, and result. SMC did not present any contrary evidence or witnesses. We conclude that substantial evidence supported the verdict of infringement under the doctrine of equivalents with respect to the issue of the first sealing rings.

2. The Magnetizable Material of the Sleeve

The relevant claim clause is as follows:

> wherein said driven member includes a cylindrical sleeve made of a magnetizable material and encircles said tube,

In the SMC devices the cylindrical sleeve is made of an aluminum alloy, a material not generally viewed as magnetizable. SMC argues that the magnetizable material is a separate claim element, and that since the SMC sleeve is not made of magnetizable material the all-elements rule prohibits the asserted equivalency. Thus SMC argues that it is irrelevant whether or not the sleeves are equivalent in fact.

Festo responds that equivalency was properly determined as to the "cylindrical sleeve made of a magnetizable material," citing *Corning Glass* for its explanation that "a patentee is, for example, free to frame the issue of equivalency, if it chooses, as equivalency to a combination of limitations." 868 F.2d at 1259 n. 6, 9 USPQ2d at 1968 n. 6. We agree that this precedent aptly fits the situation presented herein. Thus although a change of the material or properties of a component may (or may not) defeat equivalency as a matter of fact, it does not bar access to the doctrine of equivalents as a matter of law.

Testifying on the factual question of equivalency, Festo's expert witness in the field of physics and magnetism, Dr. Schroeder, explained at the trial that the purpose of the magnetizable material was to contain any magnetic flux emanating from the cylinder, lest such flux act as a brake on the piston, thereby decreasing the efficiency of the device. Dr. Schroeder explained that because of the small gap between the cylinder and the surrounding sleeve, substantially all of the magnetic flux is concentrated internally in the cylinder and any magnetic flux emanating from the cylinder is very small. His tests showed that the SMC sleeve, although made of an aluminum alloy, nonetheless minimized magnetic leakage fields and reduced the leakage by 300%. He testified that because of

the very small leakage this containment of magnetic flux occurs in substantially the same way with the same result as for the sleeve made of magnetizable material.

SMC presented no data or test evidence on its behalf, but at the trial challenged the significance of Dr. Schroeder's testimony. On this appeal SMC again criticizes Dr. Schroeder's testimony and the meaning of his results. However, there was substantial evidence whereby a reasonable jury could have found equivalency between the claimed sleeve and the sleeve of the SMC devices.

3. The Verdict of Infringement

The verdict of infringement based on the doctrine of equivalents must be sustained. However, SMC has raised new issues of prosecution history estoppel, to which we turn.

D

PROSECUTION HISTORY ESTOPPEL

The parties dispute whether prosecution history estoppel was an issue at trial. In order fully to implement the GVR we have considered this issue, which was briefed for this reconsideration hearing. We conclude, as we shall discuss, that the Court's new presumption of estoppel is relevant to the Stoll patent.

The prosecution of the Stoll patent is shown in the record before us as follows: The patent application as filed in the United States was an English- language counterpart of the German patent application. In the first Action the United States examiner made no rejection on prior art, although three references were listed as "believed pertinent" without further analysis. The examiner's only substantive comment was under '112 & 1, the examiner stating: "Exact method of operation unclear. Is device a true motor or magnetic clutch?" The examiner objected, citing '112 & 2, to some of the claims as being in multiple dependent form, a style prohibited in United States practice.

In response Festo clarified the nature of the device and rewrote the claims. In so doing, Festo included in the broadest claim (claim 1) the subject matter relating to the sealing means and the magnetizable sleeve that had been initially presented in dependent claims. Claim 1 as initially filed recited "sealing means at each end" of the piston "for wiping engagement." On rewriting after the examiner's initial Action, Festo replaced the "sealing means at each end" phrase with "first sealing rings located axially outside said guide rings," the text of dependent claim 4. Festo also replaced the phrase "hollow cylindrical assembly" of original claim 1 with "a cylindrical sleeve made of a magnetizable material and encircles said tube," from dependent claim 8. No explanation was given for these changes. The district court discussed the magnetizable sleeve in its ruling on pre-trial motions, and observed that this amendment did not appear to be needed to distinguish from prior art:

> Although the examiner identified certain "cited references believed pertinent," there is nothing in the record or the [master's] report to indicate that the limitation of a magnetizable sleeve was necessary to distinguish the claimed invention over prior art.

Accompanying the amendment Festo submitted two German patents that had been cited during examination of the corresponding German application and made the following statement:

> Applicant wishes to make of record German Offenlegengsschrift No. 27 37 924 and German Gebrauchsmuster No. 19 82 379. These references were cited in the first Office Action received in the corresponding German application. These references are obviously clearly distinguishable over the subject matter of the claims now present in this application. Accordingly, further comment about the subject matter of these references is believed

> unnecessary. It is clear that neither of these references discloses the use of structure preventing the interference of impurities located inside the tube and on the outside of the tube while the arrangement is moved along the tube.

Thus Festo referred to the wiping structure and function as not being described in the prior art. No mention was made, by applicant or examiner, of the magnetizable material or any other changes to the claims.

No rejection as to patentability was made by the United States examiner, and no other argument was presented by the applicant. SMC now states that Festo obviously amended the claims in light of the two German references it had cited, and argues that Festo is estopped from asserting equivalency as to the changes that were made in the claims. SMC states that it is irrelevant whether references were relied on by the examiner as grounds of rejection, or cited by the applicant, in order to generate an estoppel or a presumption of estoppel, against the assertion of equivalency of amended claim elements. That theory is not in accordance with the rulings of *Warner-Jenkinson*, for the Court explicitly directed its presumption to amendments that were "required" during prosecution:

> [W]e think the better rule is to place the burden on the patent-holder to establish the reason for an amendment required during patent prosecution.

520 U.S. at 33, 117 S. Ct. at 1051, 41 USPQ2d at 1873. Although SMC argues that the Stoll claim was amended to avoid some possible future rejection, in *Warner-Jenkinson* the Court, citing *Exhibit Supply Co. v. Ace Patents Corp.*, 315 U.S. 126, 136 (1942), dealt with a position similar to that now pressed by SMC:

> Chief Justice Stone distinguished inclusion of a limiting phrase in an original patent claim from

> the "very different" situation in which [changes were made] "in order to meet objections in the Patent Office, *based on references to the prior art*." [Emphasis in *Warner-Jenkinson*.]

Warner-Jenkinson, 520 U.S. at 31, 117 S. Ct. at 1049-50, 41 USPQ2d at 1872. The Court further held:

> Our prior cases have consistently applied prosecution history estoppel only where claims have been amended for a limited set of reasons, and we see no substantial cause for requiring a more rigid rule involving an estoppel regardless of the reasons for a change.

Id. at 32, 117 S. Ct. at 1050, 41 USPQ2d at 1872. SMC's theory is thus incorrect, for *Warner-Jenkinson* negates the position that every voluntary amendment must be deemed "required," whatever its provenance. However, when an amendment is accompanied by argument or explanation that distinguishes an amended portion of the claims from prior art, it is appropriate to apply the established rules of prosecution history estoppel to that subject matter. *See Id.* at 33-34, 117 S. Ct. at 1050-51, 41 USPQ2d at 1872 (analyzing explained amendment under established principles).

SMC did not previously raise the issue of prosecution history estoppel as to the two German references that Festo filed with the PTO, and did not provide the district court with translations of those references (which were in the Stoll prosecution history only in German). The district court discussed the amendment adding the magnetizable material to claim 1 as follows:

> [T]he reason why the newly substituted independent claim has the limitation that the sleeve be made of magnetizable material is a mystery, for nothing seems to turn on its composition for purposes of procuring the patent. At the very least, it is a question of fact.

Unlike the statements accompanying the amended claims concerning the sealing rings and the wiping function, no representation was made to the examiner concerning the magnetizable material of the sleeve. There is no basis for overturning the finding of the district court that the amendment concerning the magnetizable material was voluntary, and not required for patentability, *see Warner-Jenkinson*, 520 U.S. at 32, 117 S. Ct. at 1050, 41 USPQ2d at 1872 (discussing required amendments). We have been directed to no information in the newly cited translations that would lead us to require the district court to redo its study of the prosecution history and its comprehensive analysis of estoppel with respect to the magnetizable sleeve; no ruling or guidance in *Warner-Jenkinson* suggests error in the district court's analysis.

However, as to the element of the sealing rings, the prosecution history raises an unresolved issue. The applicant's reference to the wiping function, in the letter accompanying the amendment, raises the issue of whether this amendment was made for reasons of patentability, or whether the *Warner-Jenkinson* presumption arises and can, or can not, be rebutted. This issue was not before the district court, and the record is insufficient for appellate determination ab initio. In full implementation of the GVR, we remand for determination of whether such presumption has arisen, whether it can be rebutted, and the scope of any resultant estoppel. *See Litton v. Honeywell*, 140 F.3d at 1455, 46 USPQ2d at 1325 (vacating the district court's grant of JMOL and remanding for determination of prosecution history estoppel).

Should the district court find an estoppel or a presumption thereof not previously considered and not rebutted, the district court shall redetermine the question of equivalency within the confines of that estoppel. In the event that the district court determines that there is no estoppel affecting the finding of equivalency as to the sealing rings and their wiping function, the verdict of infringement may be reinstated.

CONCLUSION

The judgment of infringement of the Stoll patent is vacated, and the cause is remanded for redetermination, consistent with our discussion herein.

III

OTHER ISSUES

The remand from the Supreme Court related only to the issues of the doctrine of equivalents. We reinstate the other portions of our prior decision, *viz.* the rulings relating to the special master proceedings and the measure of damages. *See Hughes Aircraft*, 140 F.3d at 1473-74, 46 USPQ2d at 1287-88 ("Vacatur and remand by the Supreme Court, however, does not create an implication that the lower court should change its prior determination.") (citing *United States v. M.C.C. of Florida, Inc.*, 967 F.2d 1559, 1561 (11th Cir. 1992)).

Costs

Each party shall bear its costs.

AFFIRMED IN PART, VACATED IN PART, AND REMANDED.

APPENDIX C

UNITED STATES COURT OF APPEALS, FOR THE FEDERAL CIRCUIT

FESTO CORPORATION,

Plaintiff-Appellee,

v.

SHOKETSU KINZOKU KOGYO KABUSHIKI CO., LTD., a/k/a SMC Corporation, and SMC Pneumatics, Inc.,

Defendants-Appellants.

No. 95-1066.

Dec. 14, 1995.

Appeal from the United States District Court for the District of Massachusetts

Patti Saris , District Judge, Presiding

Before RICH, NEWMAN, and MICHEL, Circuit Judges.
Opinion by Judge Newman

NEWMAN, Circuit Judge.

Shoketsu Kinzoku Kogyo Kabushiki Co., Ltd., also known as SMC Corporation, and SMC Pneumatics, Inc. (collectively SMC) seek reversal of the judgment of the United States District Court for the District of Massachusetts,[6] holding that SMC had infringed two patents owned by Festo Corporation and assessing damages. The patents relate to magnetically coupled rodless cylinders wherein the follower moves by magnetic attraction to the piston, which is moved hydraulically or pneumatically. We affirm the judgment.

---

[6] *Festo Corp. v. Shoketsu Kinzoku Kogyo Kabushiki Co.*, No. 88-1814-PBS (D. Mass. Feb. 3, 1994).

I

SUMMARY JUDGMENT—THE CARROLL PATENT

Before trial the district court granted Festo's motion for partial summary judgment, finding infringement of United States Patent No. 3,779,401 (the Carroll patent) under the doctrine of equivalents. SMC, appealing this judgment, argues that in summarily finding infringement the trial judge engaged in impermissible fact-finding, contrary to the appropriate standard for Rule 56 determinations. We review the summary judgment for correctness of the process, as well as for its legal conclusion. The grant of summary judgment is given plenary review on appeal.

Summary judgment is appropriate when "the pleadings, depositions, answers to interrogatories, and admissions on file, together with the affidavits, if any, show that there is no genuine issue as to any material fact and that the moving party is entitled to a judgment as a matter of law." Fed. R. Civ. P. 56(c); *Celotex Corp. v. Catrett*, 477 U.S. 317, 322 (1986). A material fact is one whose finding is necessary to the proceedings. *Anderson v. Liberty Lobby, Inc.*, 477 U.S. 242, 248 (1986). A genuine issue of material fact is shown to exist if sufficient evidence is presented whereby a reasonable fact finder could decide the question in favor of the nonmoving party. *Id.* The evidence submitted by the nonmovant, in opposition to a motion for summary judgment, "is to be believed, and all justifiable inferences are to be drawn in his favor." *Id.* at 255.

In ruling on a motion for summary judgment the court must bear in mind the actual quantum and quality of proof necessary to support liability under the applicable law. *Id.* at 254. It is the opposing party's responsibility to raise issues of material fact that would make summary judgment inappropriate. *Matsushita Elec. Indus. Co. v. Zenith Radio Corp.*, 475 U.S. 574, 585-87 (1986). The court must assess the adequacy of the nonmovant's response and must determine whether the

showing the nonmovant asserts it would have made at trial would be sufficient to sustain its position. *See Celotex*, 477 U.S. at 322.

The infringement issue concerning the Carroll patent, which expired in 1990, was focused on reexamined claim 9, shown in the margin.[1] All of the claim elements were conceded to be

---

[1] Claim 9. A device for moving articles, which comprises:

a hollow cylinder formed of non-ferrous material and having opposite axial ends;

a piston mounted in the interior of the hollow cylinder and reciprocatingly slidable therein, the piston including a central mounting member disposed axially in the cylinder,

a plurality of cylindrically-shaped permanent magnets mounted on the central mounting member and spaced apart axially from each other, each magnet having a bore formed axially there-through for receiving the central mounting member, at least one pair of end members mounted on the central mounting member and disposed on opposite axial sides of the plurality of magnets,

a pair of cushion members formed of resilient material, the cushion members being situated near opposite axial ends of the central mounting member to help prevent damage to the piston when the piston contacts an axial end of the cylinder,

and a pair of resilient sealing rings situated near opposite axial ends of the central mounting member and engaging the cylinder to effect a fluid-tight seal therewith;

a body mounted on the exterior of the hollow cylinder and reciprocatingly slidable thereon, the body including a plurality of annularly shaped permanent magnets surrounding the cylinder and spaced apart from each other,

the permanent magnets of the piston and body being polarized so as to magnetically couple the body to the piston whereby movement of the piston inside the cylinder causes a corresponding movement of the body outside the cylinder,

the body further including means provided thereon for holding on the body an article to be moved;

and means for controlling the admission of pressure fluid into the cylinder and exhaust fluid from the cylinder for moving the piston in the cylinder, the attractive forces between the permanent magnets of the piston and the body being such that movement of the piston causes corresponding

(continued...)

literally present in the accused devices except for both members of the pair of resilient sealing rings. SMC stated to the special master "We've decided that we will not be presenting any testimony concerning infringement." Absent evidence that placed in dispute the facts of infringement, summary judgment could properly be granted on undisputed facts.

In granting summary judgment that the claim was infringed, the district court observed that SMC offered no evidence to refute Festo's assertion that substantially the same function was performed, in substantially the same way with the same result, by the claimed pair of resilient sealing rings when situated one at each end of the central mounting member, and by SMC's single ring situated at the end contacted by the pressure fluid. Although SMC now argues that there has not been compliance with the "all elements rule" of *Pennwalt Corp. v. Durand-Wayland, Inc.*, 833 F.2d 931, 935, 4 USPQ2d 1737, 1739-40 (Fed. Cir. 1987) (in banc), *cert. denied*, 485 U.S. 961, 1009 (1988), we take note that, as held in *Dolly, Inc. v. Spalding & Evenflo Cos.*, 16 F.3d 394, 398, 29 USPQ2d 1767, 1769 (Fed. Cir. 1994) and *Intel Corp. v. U.S. Int'l Trade Comm'n*, 946 F.2d 821, 832, 20 USPQ2d 1161, 1171 (Fed. Cir. 1991), there need not be one-to-one correspondence between the components of an accused device and the claimed invention. It was not disputed that the rings served the primary function of providing a tight seal at the end contacted by the pressure fluid. There was undisputed evidence to support a finding that the two-way seal employed by SMC, as used in the accused device, corresponds to the two resilient sealing rings of the claimed invention. On the record that was the basis of the motion for summary judgment we do not discern reversible

---

[1] (...continued)

movement of the body below a predetermined load on the body and such that above said predetermined load movement of the piston does not cause corresponding movement of the body. [Paragraphing added.]

error in the court's grant of summary judgment of infringement as to the Carroll patent. That judgment is affirmed.

II

THE JURY TRIAL

The remaining issues were tried to the jury. The jury found valid the Carroll patent and the Stoll patent (United States Patent No. 4,354,125), found the Stoll patent infringed, and assessed damages. The district court entered judgment on the jury verdict, denying duly made post-trial motions. The issues appealed relate only to infringement and damages; no appeal is taken on the issue of validity of either the Carroll or the Stoll patent.

We review the jury verdict to ascertain whether there was substantial evidence whereby a reasonable jury could have reached the verdict that was reached. Substantial evidence is such relevant evidence, on the record as a whole, as could be accepted by a reasonable mind as adequate to support the verdict. *Perkin-Elmer Corp. v. Computervision Corp.*, 732 F.2d 888, 893, 221 USPQ 669, 673 (Fed. Cir.), *cert. denied*, 469 U.S. 857 (1984). The court must consider the evidence in the light most favorable to the party in whose favor the jury found, and must not substitute its choice for the jury's in drawing factual inferences or deciding between conflicting evidence. *Brooktree Corp. v. Advanced Micro Devices, Inc.*, 977 F.2d 1555, 1580, 24 USPQ2d 1401, 1419 (Fed. Cir. 1992).

A. INFRINGEMENT OF THE STOLL PATENT

Stoll patent claim 1 is shown in the margin.[2] The issue of infringement focused on the claim clauses relating to the guide rings and sealing rings, for some of the accused devices contained four rings and some contained only three rings; and

---

[2] Claim 1. In an arrangement having a hollow cylindrical tube and driving and driven members movable thereon for conveying articles, the improvement comprising wherein said tube is made of a nonmagnetic material,

wherein said driving member is a piston movably mounted on the inside of said tube,

said piston having a piston body and plural axially spaced, first permanent annular magnets encircling said piston body,

said piston further including first means spacing said first permanent magnets in said axial spaced relation, the radially

peripheral surface of said magnets being oriented close to the internal wall surface of said tube,

said piston further including plural guide ring means encircling said piston body and slidingly engaging said internal wall

and first sealing rings located axially outside said guide rings for wiping said internal wall as said piston moves along said tube to thereby cause any impurities that may be present in said tube to be pushed along said tube so that said first annular magnets will be free of interference from said impurities,

wherein said driven member includes a cylindrical sleeve made of a magnetizable material and encircles said tube,

said sleeve having plural axially spaced second permanent annular magnets affixed thereto and in magnetically attracting relation to said first permanent annular magnets and second means spacing said second permanent annular magnets in said axially spaced relation, the radially inner surface of said magnets being oriented close to the external surface of said tube,

said sleeve having end face means with second sealing rings located axially outside said second permanent annular magnets for wiping the external wall surface of said tube as said driven member is moved along said tube in response to a driving movement of said piston to thereby cause any impurities that may be present on said tube to be pushed along said tube so that second permanent annular magnets will be free of interference from said impurities. [Paragraphing added.]

to the magnetizable material in the sleeve of the follower. The presence of all other claim elements and limitations in the accused devices was conceded. We confirmed in *Hilton Davis Chem. Co. v. Warner-Jenkinson Co.*, 62 F.3d 1512, 35 USPQ2d 1641 (Fed. Cir. 1995) (en banc) that the fundamental inquiry with respect to equivalency is whether the accused device is substantially the same as the patented invention, affirming the utility of the function/way/result test for substantial identity, and the relevance of objective considerations such as copying or independent development.

Both sides presented testimony and made cogent arguments at trial on the merits of their respective positions on the technologic aspects of equivalency. There was expert testimony on behalf of Festo that the SMC cylinder having a follower using an aluminum alloy sleeve encircling the magnets is substantially the same as the claimed cylinder wherein the sleeve is made of "magnetizable material," and that both serve the function of reducing magnetic leakage. Festo's expert witness in the field of physics and magnetism, Dr. Schroeder, explained that because of the small gap, any magnetic flux leaking from the cylinder is very small. He showed the tests he conducted on the SMC sleeve, and explained the evidence that a 300% reduction in magnetic leakage fields was produced by the SMC sleeve. Dr. Schroeder explained how he analyzed the composition of the SMC sleeve and compared it to the sleeve described in the patent. He testified that the SMC sleeve formed a magnetic circuit in substantially the same way as the sleeve of the patent, that it served the same function of shielding and minimizing leakage fields, and that it obtained substantially the same result of avoiding undesirable braking forces.

There was also evidence before the jury concerning the double rings at each end of the central member. SMC argues that the omission of one of the sealing rings precludes a finding of infringement, under the "all elements rule" of *Pennwalt*. However, this rule does not require a one-to-one

correspondence of components. *See, e.g., Dolly v. Spalding*, 16 F.3d at 398, 29 USPQ2d at 1769; *Intel v. ITC*, 946 F.2d at 832, 20 USPQ2d at 1171. There was testimony concerning the effect of the omission by SMC of one of the four rings, and the effect of the location of the omitted ring distal from the pressure medium. Festo presented testimony that the use by SMC of a guiding ring at both ends, retaining the wiping/sealing ring only at the end adjacent the pressure medium, corresponded to and was equivalent to the claimed ring structure, and that the SMC ring structure would still improve the life of the piston, although not as effectively as would the use of two rings at both ends. Inefficient infringement is still infringement. *Laitram Corp. v. Cambridge Wire Cloth Co.*, 863 F.2d 855, 859, 9 USPQ2d 1289, 1294 (Fed. Cir. 1988), *cert. denied*, 490 U.S. 1068 (1989).

A verdict of infringement must be sustained if reasonable jurors, viewing the evidence as a whole, could have found the facts needed to reach the verdict that was reached, in light of the applicable law. It is our obligation to defer to the trier of fact when we come upon substantial evidence to support the verdict. We neither make our own findings as if there had been no trial, nor attempt to reconstruct the entire trial on a paper record. *Anderson v. City of Bessemer City*, 470 U.S. 564, 573 (1985) ("The reviewing court oversteps the bounds of its duty under Rule 52(a) if it undertakes to duplicate the role of the lower court . . .. 'Appellate courts must constantly have in mind that their function is not to decide factual issues de novo.'") (quoting *Zenith Radio Corp. v. Hazeltine Research, Inc.*, 395 U.S. 100, 123 (1969)).

Although the differing expert opinions reflect the closeness of the technologic facts, there was substantial evidence whereby a reasonable jury could have found infringement of the Stoll patent in terms of the doctrine of equivalents. *See Transnational Corp. v. Rodio & Ursillo, Ltd.*, 920 F.2d 1066, 1068 (1st Cir. 1990) ("In reviewing the jury verdict, we are compelled even in a close case, 'to uphold the verdict unless the

facts and inferences, when viewed in a light most favorable to the party for whom the jury held, point so strongly and overwhelmingly in favor of the movant that a reasonable jury could not have arrived at this conclusion.'") (quoting *Chedd-Angier Production Co. v. Omni Publications Int'l Ltd.*, 756 F.2d 930, 934 (1st Cir. 1985)).

B. PROSECUTION HISTORY ESTOPPEL

The issue of prosecution history estoppel is raised by SMC on appeal. At trial, counsel correctly stated that "This is not really a prosecution history estoppel case." Counsel argues that it is now our obligation to determine the scope and meaning of claim terms de novo. Indeed *Markman v. Westview Instruments, Inc.*, 52 F.3d 967, 970-71, 34 USPQ2d 1321, 1322 (Fed. Cir. 1995) (en banc) requires independent determination of the construction of the claims, as a matter of law, unencumbered by the trial process. However, the issue of estoppel, to the extent that it was raised at trial, was aired in extensive testimony by the inventor and by expert witnesses on both sides, all directed to the meaning of "magnetizable material." Related factual issues were also disputed, such as the reason for the addition of this limitation to the claims.

Festo argues that prosecution history estoppel does not bar a finding of equivalency when a descriptive term in the claim was not required to be included in order to overcome prior art. *See Hilton Davis*, 62 F.3d at 1525, 35 USPQ2d at 1651 ("Nor does prosecution history estoppel preclude application of the doctrine of equivalents in this case. Whenever prosecution history estoppel is invoked as a limitation to infringement under the doctrine of equivalents, a close examination must be made as to, not only what was surrendered, but also the reason for such a surrender.") (internal quotation marks and citations omitted). As discussed in *Vaupel Textilmaschinen KG v. Meccanica Euro Italia SPA*, 944 F.2d 870, 882, 20 USPQ2d 1045, 1054 (Fed. Cir. 1991), in determining whether prosecution history estoppel applies when there has been a change in claim language during prosecution, the court must

consider both what was changed and the reason for the change. The scope of any asserted estoppel is determined in light of the prior art in the field of art relevant to the change, the statements made to the patent examiner as to the reason for the change, and the purpose of the change as it relates to the allowance of the claims. *See Mannesmann Demag Corp. v. Engineered Metal Prods. Co.*, 793 F.2d 1279, 1284-85, 230 USPQ 45, 48 (Fed. Cir. 1986).

In this case the description of the sleeve as made of magnetizable material was added during prosecution. The reason for the addition was not stated in the prosecution history, was vigorously disputed at trial, and was not at all clear to the trial judge, who called the addition "a mystery." At the trial there was testimony by the inventor and by experts on both sides, accompanied by extensive argument of counsel. The prosecution record was before the jury, as was the inventor. The trial judge did not hold Festo estopped to argue that there was equivalency between the SMC aluminum alloy sleeve and the claimed magnetizable sleeve. We do not discern error of law in this ruling, and indeed there were before the jury SMC's arguments on the technologic facts. Also before the jury were the special master's contrary findings. The special master, as discussed post, had found that there was prosecution history estoppel barring Festo's assertion of equivalency.

No objection was raised to the district court's instructions on the law of estoppel, or to the presentation of the broad issue to the jury as part of the evidence relating to infringement. *See* Fed. R. Civ. P. 51 ("No party may assign as error the giving or the failure to give an instruction unless that party objects thereto before the jury retires . . ..") We do not discern reversible error in these proceedings. Taking note of the substantial evidence of technologic identity of function, way, and result in the circumstances of actual use wherein the leakage of magnetic flux from the cylinder was small, and the disputed facts underlying the issue of estoppel, we conclude

that the judgment of infringement of the Stoll patent must be sustained.

C. THE SPECIAL MASTER

SMC argues that the reference to a special master deprived it of the right to trial by jury, in that the master's report was before the jury. SMC also objects that it was required to try the entire case twice, first to the master and then to the jury. We are sympathetic to the burden on the parties and the cost of two trials. However, this was not a matter of simply turning the case over to a master, as SMC argues, for the case was fully tried, and decided, by judge and jury.

The federal courts have certain inherent powers to appoint persons unconnected with the court to aid judges in the performance of specific duties. *Ex parte Peterson*, 253 U.S. 300, 312 (1920) (appointment of auditor to define and simplify the issues); *Constant v. Advanced Micro-Devices, Inc.*, 848 F.2d 1560, 1566-67, 7 USPQ2d 1057, 1060 (Fed. Cir.), *cert. denied*, 488 U.S. 892 (1988) (special master made recommendations on issues of validity and infringement). Consent of the parties is not required. *Peterson*, 253 U.S. at 312-14. SMC states that it objected to the appointment of a master on the ground that trial to the master should not replace the requested jury trial. However, the jury trial was not replaced. A full jury trial was held, except for the issue concerning the Carroll patent that was decided by summary judgment. Rule 53(b) states in part:

> Rule 53(b) Reference. A reference to a master shall be the exception and not the rule. In actions to be tried by a jury, a reference shall be made only when the issues are complicated; in actions to be tried without a jury, save in matters of account and of difficult computation of damages, a reference shall be made only upon a showing that some exceptional condition requires it . . ..

The trial judge to whom this case was first assigned deemed the case to be sufficiently complicated to be referred to a special master, to conduct a hearing on the issues of patent validity and infringement and to make recommendations on those issues. The successor trial judge, sharing the view that the issues were complicated, continued the reference. In a non-jury trial, complexity alone does not warrant reference to a master; "On the contrary, we believe that this is an impelling reason for trial before a regular, experienced trial judge rather than before a temporary substitute appointed on an ad hoc basis and not ordinarily experienced in judicial work." *La Buy v. Howes Leather Co.*, 352 U.S. 249, 259 (1957). However, the strict "exceptional condition" standard of Rule 53(b) relates only to actions tried without a jury. Thus the district court did not abuse its discretion in referring the complex technologic issues of validity and infringement to a special master.

The master apparently conducted a full trial of these issues, and produced a detailed report. Rule 53(e)(3) permits the master's report to be presented along with other evidence for consideration by the jury:

> Rule 53(e)(3) In Jury Actions. In an action to be tried by a jury the master shall not be directed to report the evidence. The master's findings upon the issues submitted to the master are admissible as evidence of the matters found and may be read to the jury, subject to the ruling of the court upon any objections in point of law which may be made to the report.

See Crateo, Inc. v. Intermark, Inc., 536 F.2d 862, 868 (9th Cir.) (findings of special master are admissible as evidence and may be read to the jury; Rule 53(e)(3) does not require master to personally read findings, or to be made available for cross-examination), *cert. denied*, 429 U.S. 896 (1976); Peterson, 253 U.S. at 310-11:

> The report will, unless rejected by the court, be admitted at the jury trial as evidence of facts and findings embodied therein; but it will be treated, at most, as prima facie evidence thereof. The parties will remain free to call, examine, and cross-examine witnesses as if the report had not been made. No incident of the jury trial is modified or taken away either by the preliminary, tentative hearing before the auditor or by the use to which his report may be put.

SMC states that it objected to the possession of a redacted version of the master's report by the jury, although it agreed that portions of the report could be read to the jury. SMC, Festo, and the judge had previously agreed on the redacted (both sides call it "sanitized") version of the report. We observe that the subject matter remaining in the report related to the technology of the invention and the prior art, and the master's findings and recommendations on the issues of validity and infringement. The master's report favored SMC on the important question of infringement of the Stoll patent, although it favored Festo on the validity issues.

The court allowed the jurors to have a copy of the report, instead of merely reading it to them as stated in the Rule, in light of the complexity of the technologic facts. The copies were to be turned in prior to deliberations, and the jurors were so informed upon distribution of the report. However, apparently not all copies were turned in or collected prior to deliberations. SMC states that this tainted the entire procedure, and requires granting a new trial or setting aside or modifying the verdict.

The district court found that any procedural error was harmless and did not affect the substantial rights of either party. The district court referred to the following factors: (1) the jurors had notebooks to take notes on the master's report while they were reading it; (2) because various members of the jury finished reading the report on July 11, 12, and 13, the report

was fresh in their minds during deliberations on July 14; (3) counsel for both sides commented on the findings in the report during their closing arguments; (4) the court gave clear instructions to the jury that they could give whatever weight they chose to the report and that they, not the special master, were the ultimate fact-finders; and (5) the verdict of the jury disregarded a key finding of the master's report with respect to the magnetizable sleeve, demonstrating that the jury did not actually give the master's report undue weight. Post-Trial Memorandum at 2 (July 26, 1994).

We do not deem the jury trial to have been fatally flawed. The technology was complex, the fine points of patent validity and infringement were complex, and the accounting evidence was complex. All were explained in the master's report, and during the argument reference was made by both parties to the master's findings and explanations. The master's report is evidence, and as such may be referred to in arguments of counsel. Fed. R. Civ. P. 53(e)(3); *Charles A. Wright, Inc. v. F.D. Rich Co.*, 354 F.2d 710, 714 (1st Cir.), *cert. denied*, 384 U.S. 960 (1966). There was testimony of witnesses on the points that had been discussed by the special master. Although the Court has cautioned that a special master must not replace a jury trial, *Dairy Queen, Inc. v. Wood*, 369 U.S. 469, 478 n. 18, 133 USPQ 294, 297 n. 18 (1962); *La Buy*, 352 U.S. at 258, in this case a full jury trial was held.

It is significant that the jury verdict did not track the master's conclusions. Although SMC argues that the jury must have placed undue reliance on the master's conclusions, SMC's counsel told the jury in closing argument:

> Judge Saris will instruct you that you can give whatever weight you desire to this report. I would suggest to you that you give it the maximum weight. He especially considered this point. He was certainly very knowledgeable concerning everything that went on. He had an eleven-day trial before him and

> then he issued a detailed 68-page report in which he concluded that the SMC rodless cylinder did not infringe.

Despite this exhortation, the jury's conclusion as to infringement of the Stoll patent was contrary to the master's conclusion.

On the entirety of the circumstances, we do not believe that SMC's rights to a fair trial were affected by the lapse whereby the jury retained a copy of the master's report during its deliberations. Fed. R. Civ. P. 61 provides:

> Rule 61. Harmless Error No error in either the admission or the exclusion of evidence and no error or defect in any ruling or order or in anything done or omitted by the court or by any of the parties is ground for granting a new trial or for setting aside a verdict or for vacating, modifying or otherwise disturbing a judgment or order, unless refusal to take such action appears to the court inconsistent with substantial justice. The court at every stage of the proceeding must disregard any error or defect in the proceeding which does not affect the substantial rights of the parties.

We discern no ground for a new trial flowing from the procedures with respect to the special master.

III

DAMAGES

SMC disputes the damages assessed by the jury. The assessment of damages is a question of fact, and is decided by the jury when trial is to a jury. *Brooktree*, 977 F.2d at 1578, 24 USPQ2d at 1417; *Weinar v. Rollform, Inc.*, 744 F.2d 797, 808, 223 USPQ 369, 375 (Fed. Cir. 1984), *cert. denied*, 470 U.S. 1084, 105 S. Ct. 1844, 85 L. Ed. 2d 143 (1985). The jury's award must be upheld unless the amount is grossly excessive,

clearly not supported by the evidence, or based on speculation or guesswork. *Brooktree*, 977 F.2d at 1580, 24 USPQ2d at 1419. To the extent that there were conflicts in the evidence with respect to damages, neither the trial court upon motion for judgment as a matter of law, nor the appellate court, may substitute its findings for those of the jury. *Id.* at 1581, 24 USPQ2d at 1419.

A. GENERAL DAMAGES

The general measure of the actual damages of a manufacturing patentee is the lost profits that the patentee would have earned but for the infringement. *Aro Mfg. Co. v. Convertible Top Replacement Co.*, 377 U.S. 476, 507, 141 USPQ 681, 694 (1964); *Del Mar Avionics, Inc. v. Quinton Instrument Co.*, 836 F.2d 1320, 1326, 5 USPQ2d 1255, 1260 (Fed. Cir. 1987). Festo was a manufacturer of the patented product, and presented evidence on the factors of (1) demand for the product, (2) the possible substitution of other products, (3) Festo's manufacturing and marketing capability to fulfill the demand, and (4) the amount of profit Festo would have made on the sales lost due to the infringement. *See Panduit Corp. v. Stahlin Bros. Fibre Works, Inc.*, 575 F.2d 1152, 1156, 197 USPQ 726, 729-30 (6th Cir. 1978); *Gyromat Corp. v. Champion Spark Plug Co.*, 735 F.2d 549, 552, 222 USPQ 4, 6 (Fed. Cir. 1984). As discussed in *Rite-Hite Corp. v. Kelley Co.*, 56 F.3d 1538, 1545, 35 USPQ2d 1065, 1069 (Fed. Cir. 1995) (en banc), the *Panduit* factors are a useful (albeit not the only) mode of establishing damages in patent cases. In this case the evidence presented by Festo methodically tracked the *Panduit* factors.

Mr. Horst Saalbach, President of Festo, and Mr. Joachim Scholz, Vice President of Sales and Marketing of Festo, testified about the demand for magnetically coupled rodless cylinders because of their unique characteristics. Mr. Saalbach and Mr. Scholz testified that mechanical rodless cylinders, and band and cable cylinders, were not acceptable substitutes in the special applications in which magnetically coupled rodless

cylinders are used. They provided evidence that Festo and SMC were the only suppliers during the period of infringement. Mr. Saalbach testified that Festo could have accommodated about eight to ten times more business in the rodless cylinder market.

SMC disputed the issue of substitution of other products. The parties also presented conflicting evidence and argument as to the relative prices at which SMC and Festo sold comparable products, and the effect of any price differential on a customer's choice of a non-infringing substitute. SMC relies on *BIC Leisure Prods., Inc. v. Windsurfing Int'l, Inc.*, 1 F.3d 1214, 27 USPQ2d 1671 (Fed. Cir. 1993); however, in BIC there were at least fourteen competing manufacturers, whereas in the case at bar Festo and SMC were the only manufacturers. When there is a two-supplier market occupied by the patentee and the infringer, it is reasonable for the jury to infer that the patentee would have made the infringer's sales, absent proof to the contrary. *See State Indus., Inc. v. Mor-Flo Indus., Inc.*, 883 F.2d 1573, 1578, 12 USPQ2d 1026, 1029 (Fed. Cir. 1989), *cert. denied*, 493 U.S. 1022 (1990). On the totality of the evidence, we conclude that a reasonable jury could have found that Festo's damages should be measured by its lost profits due to SMC's infringement.

Mr. Steven Skalak, a CPA from Coopers & Lybrand, provided a detailed analysis of Festo's lost profits, showing the calculations he performed to determine what Festo's profits would have been had there been no infringement by SMC. SMC disputes the measurement of such profits, arguing that Festo had a net loss for its early years, and Festo responding that these magnetic cylinders were profitable items. Festo states that SMC's accounting witness, Mr. Squire, did not provide an alternative lost profit analysis, or identify any items that should have been included in or excluded from the calculation of Festo's fixed costs. SMC does not disagree. Although SMC now appears to challenge all of Festo's

evidence, it is apparent that there was substantial evidence at trial that could support the jury verdict.

B. ACCESSORY SALES

SMC states that included in the damages award were lost sales of "accessory" items sold with the magnetically coupled rodless cylinders. In *Rite-Hite*, 56 F.3d at 1550, 35 USPQ2d at 1073 the court stated that "[we do not extend] liability to include items that have essentially no functional relationship to the patented invention and that may have been sold with an infringing device only as a matter of convenience or business advantage."

There was undisputed testimony that the items here at issue could be used only with the patented magnetic cylinders, and had no independent market or use. Mr. Saalbach testified that certain "accessories" are necessary to make the magnetically coupled rodless cylinder operational. Mr. Scholz testified that the accessories that Festo sells "you must have to get this device to do work." Mr. Skalak explained the study he performed to verify Festo's sales of these items with the patented rodless cylinders. Such items, having no market, use, or value separate from the patented cylinders, were properly included in the damages award.

The verdict of damages was supported by substantial evidence and in accordance with law, and must be sustained.

IV

CONCLUSION

The district court's judgment is affirmed.

Costs are taxed in favor of Festo.

AFFIRMED.

APPENDIX D

UNITED STATES DISTRICT COURT
DISTRICT OF MASSACHUSETTS

FESTO CORPORATION,

Plaintiff,

v.

SHOKETSU KINZOKU KOGYO KABUSHIKI CO., LTD., a/k/a SMC CORPORATION, and SMC PNEUMATICS, INC.,

Defendants.

Civil Action No. 88-1814- PBS

JUDGMENT

This Court, sitting with a jury, tried the issues with respect to the validity of two United States patents (the "Stoll") and "Carroll" patents) owned by Plaintiff Festo Corporation ("Festo") and the infringement of the Stoll patent by Defendants SMC Corporation and SMC Pneumatics, Inc. (collectively "SMC"), and this Court considered the evidence introduced by the parties and the arguments presented on their behalf. In addition, on July 11, 1994, this Court granted summary judgment on infringement of the Carroll patent with respect to the SMC basic type magnetically coupled rodless cylinder, excluding the 6mm bore size.

Pursuant to the jury verdict rendered on July 14, 1994 regarding validity of both the Stoll and Carroll patents and infringement of the Stoll patent, the summary judgment motion granted by this Court with respect to infringement of the Carroll patent and the jury verdict rendered on July 21, 1994 setting forth the damages based on infringement of these patents, this Court directs entry of judgment as set forth below. It is hereby

ORDERED AND ADJUDGED, that

1. This Court has jurisdiction over the subject matter of this action and over the parties.

2. Plaintiff Festo is the owner by assignment of Stoll United States Patent No. 4,354,125 and Carroll Re-examination Certificate B1 3,779,401 ("the patents in suit") and of all rights of recovery for infringement thereof.

3. Defendant SMC has manufactured and sold in the United States during the term of the patents in suit, without authority from Festo, CY1 NCY1 series magnetically coupled rodless cylinders, excluding the 6mm bore size.

4. With respect to Stoll U.S. Patent No. 4,354,125, entitled, "Magnetically Coupled Arrangement For A Driving And A Driven Member," issued October 12, 1982:

a) SMC has failed to carry its burden of proving Claims 1-3 invalid.

b) SMC has failed to carry its burden of proving that the Stoll patent is invalid for not disclosing the best mode.

c) SMC has infringed Claim 1 of the Stoll patent by making, using and selling CY1 and NCY1 series magnetically coupled rodless cylinders, excluding the 6mm bore size.

5. With respect to the Carroll Re-examination Certificate No. B1 3,779,401, entitled, "Pneumatic Device For Moving Articles," issued October 25, 1988:

a) SMC has failed to carry its burden of proving Claim 9 invalid.

b) In accordance with this Court's July 11, 1994 order, SMC has infringed Claims 9, 5 and 6 of the re-examined Carroll patent by making, using and selling CY1 and NCY1 series, basic type, magnetically coupled rodless cylinders, excluding the 6mm bore size.

c) Festo's claim of infringement of the re-examined Carroll patent with respect to SMC's CY1 and NCY1

series, cylinder type, magnetically coupled rodless cylinders is dismissed with prejudice in accordance with this Court's July 11, 1994 order.

6. Effective forty-five (45) days from entry of judgment, in accordance with 35 U.S.C. § 283, SMC Pneumatics, Inc. and SMC Corporation, its officers, agents, servants, employees, and attorneys and those persons in active concert or participation with them who receive actual notice of this judgment by personal service or otherwise, are enjoined and restrained:

(i) from making, using or selling in the United States any magnetically coupled rodless cylinder which infringes Claim 1 of Plaintiff Festo Corporation's Stoll U.S. Patent No. 4,354,125, including, without limitation, by manufacture, use or sale of CY1 and NCY1 series magnetically coupled rodless cylinders, excluding the 6mm bore size;

(ii) from doing any act in the United States which actively induces infringement of Claim 1 of Plaintiff Festo Corporation's Stoll U.S. Patent No. 4,354,125.

(iii) from supplying in or from the United States all or a substantial portion of the components of the Stoll patented invention, where such components are combined in whole or in part, in such manner as to actively induce the combination of such components outside of the United States in a manner that would infringe Claim 1 of Plaintiff Festo Corporation's Stoll U.S. Patent No. 4,354,125, if such combination occurred within the United States; and

7. Counts II through VI of the Festo Complaint regarding predatory pricing are hereby dismissed with prejudice in accordance with the Decision On Summary Judgment by Judge Mazzone on January 27, 1992.

8. SMC's counterclaim regarding infringement of Miyamoto U.S. Patent No. 4,488,477 entitled "Rodless Cylinder" is hereby dismissed with prejudice.

9. In accordance with 35 U.S.C. § 284, the total amount of damages adequate to compensate Festo for SMC's infringement through December 31, 1993 is $4,322,456 plus prejudgment interest of $416,727 for a total of $4,739,183. This Court shall determine an amount of damages on the same lost profits basis as awarded by the jury to Festo for the period between January 1, 1994 and the date on which a determination on appeal to the Court of Appeals for the Federal Circuit is made or the time for making an appeal to the Court of Appeals for the Federal Circuit has been exhausted. Accordingly, SMC is to provide this Court and Festo, within 30 days after a determination of appeal, sufficient information to carry out a separate accounting for the period identified above which shall be submitted to the Court for making the determination of additional damages. Plaintiff Festo is also entitled to interest on these additional damages in an amount to be determined by this Court.

10. Each party is to bear its own costs and attorneys' fees.

Judgment is hereby entered in favor of Plaintiff Festo Corporation against Defendants SMC Corporation and SMC Pneumatics, Inc. and each of them on the issues of liability and damages.

SO ORDERED.

/s/ Patti B. Saris
PATTI B. SARIS
United States District Judge

Dated: October 27, 1994

Supreme Court, U.S.
FILED
MAY 9 2001
OFFICE OF THE CLERK

No. 00-1543

IN THE
Supreme Court of the United States

FESTO CORPORATION,

Petitioner,

v.

SHOKETSU KINZOKU KOGYO KABUSHIKI CO, LTD.,
A/K/A SMC CORPORATION AND SMC PNEUMATICS, INC.,

Respondents.

On Petition for Writ of Certiorari to the United States Court of Appeals for the Federal Circuit

BRIEF IN OPPOSITION

JAMES B. LAMPERT
HALE AND DORR
60 State Street
Boston, Massachusetts 02109
(617) 526-6000

ARTHUR I. NEUSTADT
Counsel of Record
CHARLES L. GHOLZ
ROBERT T. POUS
OBLON, SPIVAK, MCCLELLAND,
MAIER & NEUSTADT, P.C.
1755 Jefferson Davis Highway
Arlington, Virginia 22202
(703) 413-3000

Counsel for Respondents

QUESTIONS PRESENTED

The *en banc* Federal Circuit, based on its extensive experience grappling with the issues in large numbers of cases, resolved several questions about the standards for prosecution history estoppel, a longstanding and essential limit on the availability of the doctrine of equivalents. Two questions are presented in the petition:

1. Whether prosecution history estoppel applies when a claim element is narrowed to satisfy the statutory requirements for patentability, as the *en banc* Federal Circuit held, or instead applies only to some subset of the statutory patentability requirements.

2. When estoppel applies to such a narrowed claim element, whether estoppel bars equivalents for that element, as the *en banc* Federal Circuit held, or instead allows an undefined range of equivalents for that element.

CORPORATE DISCLOSURE STATEMENT

SMC Corporation is the parent of SMC Pneumatics, Inc.

TABLE OF CONTENTS

page

QUESTIONS PRESENTED i

CORPORATE DISCLOSURE STATEMENT ii

TABLE OF CONTENTS iii

TABLE OF AUTHORITIES iv

STATEMENT 2

A. This Case 2

B. Panel Decisions 5

C. The Federal Circuit's *En Banc* Decision 5

REASONS FOR DENYING THE PETITION 11

A. Festo's First Question Presented Does Not Warrant Review 11

B. Festo's Second Question Presented Does Not Warrant Review 16

CONCLUSION 30

TABLE OF AUTHORITIES

Statutes:

1952 Patent Act 22

35 U.S.C. §101 13

35 U.S.C. §102 ..... 6, 13

35 U.S.C. §103 ..... 6, 13

35 U.S.C. §112 14

35 U.S.C. §112 ¶1 13

35 U.S.C. §112, ¶2 ..... 13, 14, 16

Cases:

Athletic Alternatives, Inc. v. Prince Mfg., Inc.,
73 F.3d 1573 (Fed. Cir. 1996) 26

Augustine Med. Inc. v. Gaymar Indus. Inc.,
181 F.3d 1291 (Fed. Cir. 1999) 26

BAI v. L & L Wings,
160 F.3d 1350 (Fed. Cir. 1998) 15, 26

Bayer Aktiengesellschaft v. Buphar Int'l Research B.V.,
738 F.2d 1237 (Fed. Cir. 1984) 26, 27

Bayer AG v. Elan Pharm. Research Corp.,
212 F.3d 1241 (Fed. Cir. 2000) 26

Black & Decker, Inc. v. Hoover Service Center,
886 F.2d 1285 (Fed. Cir. 1989) 27

Black & Decker, Inc. v. Hoover Service Center,
765 F. Supp. 1129 (D. Conn. 1991) 27

Bonito Boats Inc. v. Thunder Craft Boats Inc.,
489 U.S. 141 (1989) 14

Charles Greiner & Co. v. Mari-Med Mfg.,
962 F.2d 1031 (Fed. Cir. 1992) 24, 26

Chemical Eng'g Corp. v. Essef Indus., Inc.,
795 F.2d 1565 (Fed. Cir. 1986) 26

Cybor Corp. v. FAS Tech., Inc.,
138 F.3d 1448 (Fed. Cir. 1998) (*en banc*) 17, 27

Desper Prod. Inc. v. QSound Labs, Inc.,
157 F.3d 1325 (Fed. Cir. 1998) 26

Dickinson v. Zurko,
527 U.S. 150 (1999) 19

Diversitech Corp. v. Century Steps, Inc.,
850 F.2d 675 (Fed. Cir. 1988) 26

Dixie USA, Inc. v. Infab Corp.,
927 F.2d 584 (Fed. Cir. 1991) 24, 26

Ekco Prods. Co. v. Chicago Metallic Mfg. Co.,
347 F.2d 453 (7th Cir. 1965) 8

EMI Group North America, Inc. v. Intel Corp.,
157 F.3d 887 (Fed. Cir. 1998) 26

Environmental Instruments, Inc. v. Sutron Corp.,
877 F.2d 1561 (Fed. Cir. 1989) 26

Exhibit Supply Co. v. Ace Patents Corp.,
315 U.S. 126 (1942) 22, 23

Festo v. Shoketsu Kinzoku Kogyo Kabushiki Co.,
187 F.3d 1381 (Fed. Cir. 1999) 5

Festo v. Shoketsu Kinzoku Kogyo Kabushiki Co.,
234 F.3d 558 (Fed. Cir. 2000) 18

Genentech, Inc. Wellcome Found., Ltd.,
29 F.3d 1555 (Fed. Cir. 1994) 26

General Elec. Co. v. Wabash Appliance Corp.,
304 U.S. 364 (1938) 14

Goodyear Dental Vulcanite Co. v. Davis,
102 U.S. 222 (1880) 23

Graver Tank & Mfg. Co. v. Linde Air Products Co.,
339 U.S. 605 (1950) 22

Great Northern Corp. v. Davis Cove & Pad Co., Inc.,
782 F.2d 159 (Fed. Cir. 1986) 27

Hi-Life Prod. Inc. v. American Nat'l Water Mattress Corp.,
842 F.2d 323 (Fed. Cir. 1988) 28

Hilton Davis Chemical Co. v. Warner-Jenkinson Co.,
62 F.3d 1512 (Fed. Cir. 1995) 28

Hilton Davis Chemical Co. v. Warner-Jenkinson Co.,
114 F.3d 1161 (Fed. Cir. 1997) 28

Hoganas AB v. Dresser Indus., Inc.,
9 F.3d 948 (Fed. Cir. 1993) 26

Hormone Research Found., Inc. v. Genentech, Inc.,
904 F.2d 1558 (Fed. Cir. 1990) 27

Hughes Aircraft Co. v. United States,
717 F.2d 1351(Fed. Cir. 1983) 8, 24, 28

Hughes Aircraft Co. v. United States,
140 F.3d 1470 (Fed. Cir.), *reh'g denied over dissents*, 148 F.3d 1384 (Fed. Cir. 1998), *cert. denied*, 525 U.S. 1177 (1999) 5, 28

Insituform Tech., Inc. v. Cat Contracting, Inc.,
99 F.3d 1098 (Fed. Cir. 1996) 28

Insituform Tech., Inc. v. Cat Contracting, Inc.,
161 F.3d 688 (Fed. Cir. 1998), *vacated in part*,
2001 WL 294164 (Fed. Cir. Mar. 24, 2001) 28, 29

Insta-Foam Products, Inc. v. Universal Foam Systems, Inc.,
906 F.2d 698 (Fed. Cir. 1990) 27

Jonsson v. Stanley Works,
903 F.2d 812 (Fed. Cir. 1990) 26

K-2 Corp. v. Salomon S.A.,
191 F.3d 1356 (Fed. Cir. 1999) 26

KCJ Corp. v. Kinetic Concepts, Inc.,
223 F.3d 1351 (Fed. Cir. 2000) 26

Kinzenbaw v. Deere & Co.,
741 F.2d 383 (Fed. Cir. 1984) 8, 24

LaBounty Mfg., Inc. v. ITC,
867 F.2d 1572 (Fed. Cir. 1989) 17

LaBounty Mfg., Inc. v. ITC,
958 F.2d 1066 (Fed. Cir. 1992) 27

Laitram Corp. v. Morehouse Indus., Inc.,
143 F.3d 1456 (Fed. Cir. 1998) 26

Laitram Corp. v. NEC Corp.,
952 F.2d 1357 (Fed. Cir. 1991) 27

Laitram Corp. v. NEC Corp.,
62 F.3d 1388 (Fed. Cir. 1995) *27*

Litton Systems, Inc. v. Honeywell, Inc.,
140 F.3d 1449 (Fed. Cir.), *reh'g denied over dissents*, 145 F.3d 1472 (Fed. Cir. 1998) 5, 21, 28

Litton Systems, Inc. v. Honeywell, Inc.,
238 F.3d 1376 (Fed. Cir. 2001) 28

Lockwood v. American Airlines, Inc.,
107 F.3d 1565 (Fed. Cir. 1997) 26

Loctite Corp. v. Ultraseal Ltd.,
781 F.2d 861 (Fed. Cir. 1985) 27

London v. Carson Pirie Scott & Co.,
946 F.2d 1534 (Fed. Cir. 1991) 25

Loral Fairchild Corp. v. Sony Corp.,
181 F.3d 1313 (Fed. Cir. 1999) 15, 26

Mannesmann Demag Corp v. Engineered Metal Prod. Co., Inc.,
793 F.2d 1279 (Fed. Cir. 1986) 26

Markman v. Westview Instruments, Inc.,
517 U.S. 370 (1996) 9, 19, 20

Merck Co. v. Mylan Pharms. Inc.,
190 F.3d 1335 (Fed. Cir. 1999) 26

Modine Mfg. Co. v. United States,
75 F.3d 1545 (Fed. Cir. 1996) 28

Moeller v. Ionetics, Inc.,
794 F.2d 653 (Fed. Cir. 1986) 27, 28

Nationwide Chemical Corp. v. Wright,
584 F.2d 714 (5th Cir. 1978) 8

Pall Corp. v. Micron Separations, Inc.,
66 F.3d 1311 (Fed. Cir. 1995) 29

Pennwalt Corp. v. Durand-Wayland, Inc.,
833 F.2d 931 (Fed. Cir. 1987) 26

Pfaff v. Wells Electronics Inc.,
525 U.S. 55 (1998) 19

Pharmacia & Upjohn v. Mylan Pharmaceuticals,
170 F.3d 1373 (Fed. Cir. 1999) 26

Schriber-Schroth Co. v. Cleveland Trust Co.,
311 U.S. 211 (1940) 23

Senmed, Inc. v. Richard-Allen Medical Industries, Inc.,
888 F.2d 815 (Fed. Cir. 1989) 24

Sextant Avionique, S.A. v. Analog Devices, Inc.,
172 F.3d 817 (Fed. Cir. 1999) 26

Shepard v. Carrigan,
116 U.S. 593 (1886) 23

Shoketsu Kinzoku Kogyo Kabushiki Co. v. Festo Corp.,
520 U.S. 1111 (1997) 5

Slimfold Mfg. Co. v. Kinkead Industries Inc.,
932 F.2d 1453 (Fed. Cir. 1991) 20, 21

Smith v. Magic City Kennel Club,
282 U.S. 784 (1931) 23

Southwall Technologies, Inc. v. Cardinal IG Co.,
54 F.3d 1570 (Fed. Cir. 1995) 26

Sun Studs, Inc. v. ATA Equip. Leasing, Inc.,
872 F.2d 978 (Fed. Cir. 1989) 27

Tandon Corp. v. United States Int'l Trade Comm'n,
831 F.2d 1017 (Fed. Cir. 1987) 26

Texas Instruments, Inc. v. U.S. Int'l Trade Comm'n,
988 F.2d 1165 (Fed. Cir. 1993) 26

Townsend Eng'g Co. v. Hitec Co., Ltd.,
829 F.2d 1086 (Fed. Cir. 1987) 26

United Carbon Co. v. Binney & Smith Co.,
317 U.S. 228 (1942) 14, 20

Universal Oil Prods. Co. v. Globe Oil & Refining Co.,
322 U.S. 471 (1944) 14

Vaupel Textilmashinen v. Meccanica Euro Italia,
944 F.2d 870 (Fed. Cir. 1991) 28

Wang Labs, Inc. v. Mitsubishi Elecs. Amer., Inc.,
103 F.3d 1571 (Fed. Cir. 1997) 24, 26

Wang Laboratories, Inc. v. Toshiba Corp.,
993 F.2d 858 (Fed. Cir. 1993) 24, 26

Warner-Jenkinson Co. v. Hilton Davis Chemical Co.,
520 U.S. 17 (1997) ..... *passim*

Water Technologies Corp. v. Calco, Ltd.,
850 F.2d 660 (Fed. Cir. 1988) 27

Weber Elec. Co. v. E.H. Freeman Elec. Co.,
256 U.S. 668 (1921) 23

Publications:

5A D. Chisum, *Chisum on Patents*
§18.05[3][b] (1998) 23

5A D. Chisum, *Chisum on Patents*
§18.05 (1998 & 2000 Supp.) 5

13 D. Chisum, *Chisum on Patents*,
Federal Circuit Topical Outline,
sections 5410-5418 (1998 & 2000 Supp.) 5

Note, *To Bar or Not to Bar: Prosecution History Estoppel After Warner-Jenkinson*,
111 Harv. L. Rev. 2330 (1998) 24

Otterstedt, *Unwrapping File Wrapper Estoppel in the Federal Circuit: A New Economic Policy Approach*, 67 St. John's L. Rev.
405 (1993) 24

Smith, *The Federal Circuit's Modern Doctrine of Equivalents in Patent Infringement*,
29 Santa Clara L. Rev. 901, 921 (1989) 23, 24

Strawbridge et al., Area Summary,
Patent Law Developments in the United States Court of Appeals for the Federal Circuit During 1986, 36 Am. U.L.Rev. 861
(1987) 23

In The

Supreme Court of the United States

No. 00-1543

FESTO CORPORATION,

Petitioner,

v.

SHOKETSU KINZOKU KOGYO KABUSHIKI CO., LTD. a/k/a SMC CORPORATION and SMC PNEUMATICS, INC.

Respondents.

On Petition for Writ of Certiorari to the United States Court of Appeals for the Federal Circuit

---

BRIEF IN OPPOSITION

The Federal Circuit decided this case *en banc* in the performance of its essential role of refining the rules governing assertions of infringement under the doctrine of equivalents to ensure that the public notice function of the patent claiming system is not defeated by that doctrine. As this Court stressed in *Warner-Jenkinson Co. v. Hilton Davis Chem. Co.*, 520 U.S. 17 (1997), prosecution history estoppel is a longstanding and essential limit on patentees' ability to reach otherwise-available equivalents by extending their patent monopolies beyond the claim terms they specifically adopted in the PTO to secure issuance of their patents. In the years following *Warner-Jenkinson*, the Federal Circuit decided a plethora of cases

reflecting the persistent and well-recognized uncertainty about the proper estoppel standards and how those standards would apply to particular patents. Based on its unique and extensive experience, the Federal Circuit in this case resolved the doctrinal confusion and did so in a way that furthers the important public-notice and PTO-primacy policies of the patent law, enhancing the public's ability to determine a patent's boundaries and thus reducing the chill that unpredictability places on competition and further innovation. The Federal Circuit's decision should stand.

STATEMENT

A. This Case

This case involves two patents owned by petitioner Festo: the Stoll patent and the Carroll patent, both of which involve a magnetic rodless cylinder with three basic parts – a piston, a cylinder, and a sleeve.[1] The piston is inside the cylinder and is moved by fluid under pressure. The sleeve is outside the cylinder and is magnetically coupled to the piston, so that a magnetic attraction between the sleeve and the piston causes the sleeve to follow the piston as the piston moves inside the cylinder. The sleeve is used to move objects on a conveying system. Pet. App. 33a.

[1]Although Festo's legal arguments do not depend on its touting of its patents' contribution to rodless cylinder technology, the record makes clear that Festo's patents were at most narrow improvement patents, secured by addition of specific narrowing limitations – which were not present in the accused rodless cylinders. Magnetic rodless cylinders were described in the prior art beginning in the early 1960s. Fed. Cir. Jt. App. A8631-35.

During prosecution of the Stoll patent application, Festo amended the main claim to recite a sealing ring at each end of the piston. Pet. App. 40a. These sealing rings "prevent any impurities from getting on the piston." Pet. App. 33a. Festo also amended its main claim to recite magnetizable material in the sleeve. Pet. App. 40a. This magnetizable material "allows 'magnetic leakage fields in the vicinity of the driven assembly to be kept to a minimum,' preventing any unwanted braking forces." Pet. App. 34a (quoting Stoll patent). As the Federal Circuit concluded, Festo added the limitation requiring two sealing rings in order *to avoid prior art*. Pet. App. 52a. The addition of the limitation requiring magnetizable material, Festo asserted, was an unexplained "mystery" – a conclusion with which the district court and Federal Circuit agreed.[2]

The Carroll patent issued in 1973. Fifteen years later, in 1988, after Festo discovered prior art not previously disclosed to the PTO, Festo requested reexamination of its patent. During the reexamination process, Festo amended the main claim of its patent to recite a sealing ring at each end of the piston. Pet. App. 35a-39a, 42a. Festo asserted that its main claim was a combination claim that owed its patentability to the combination of the recited elements. Pet. App. 42a-43a. As with the Stoll application, the Federal Circuit held that the

[2]"The [district] court concluded that the reason for the magnetizable sleeve element was '*a mystery*,' because it did not appear to be related to any of the examiner's 35 U.S.C. §112 rejections, and it did not appear to distinguish the invention over the prior art." Pet. App. 44a (emphasis added). The Federal Circuit unanimously concluded that, under the presumption of estoppel set forth in *Warner Jenkinson*, an unexplained amendment bars equivalents for the added element. Pet. App. 31a. That conclusion, by itself, bars infringement of the Stoll patent, even without consideration of the separate limitation requiring two sealing rings.

limitation requiring two sealing rings was added *to avoid prior art*.[3]

Although Festo insinuates otherwise, the rodless cylinder produced by respondents (collectively "SMC") was not copied from Festo's rodless cylinder.[4] SMC's cylinder did not include two sealing rings. SMC's cylinder also did not include magnetizable material in the sleeve. Those differences ruled out literal infringement. Pet. App. 48a, 53a.

Festo was therefore forced to resort to the doctrine of equivalents. Pet App. 44a. Although Festo had made clear to the PTO, through its amendments to include the specific elements in its patent claims, that it was important to its invention to have (1) a sealing ring at each end of the piston and (2) magnetizable material in the sleeve, Festo had to reverse course to allege infringement by equivalents. Festo now asserted that (1) a sealing ring at each end of the piston and (2) magnetizable material in the sleeve were so unimportant that their *absence* was "equivalent" to their *presence*. Festo prevailed in the district court. Pet. App. 32a.

---

[3]"The prosecution history of the Carroll patent reveals that the amendment that added the pair of sealing rings claim element was motivated by at least one reason related to patentability: *a desire to avoid the prior art*." Pet. App. 55a, emphasis added.

[4]Throughout its petition, Festo pejoratively implies that SMC is an "unscrupulous copyist." This is a serious misrepresentation. As unequivocally held by the district court, "[y]ou're right, there is no evidence of copying." Fed. Cir. Jt. App. A1604.

B. Panel Decisions

Prior to its *en banc* decision, the Federal Circuit decided this case twice. In 1995, it affirmed the district court judgment. Pet. App. 190a-207a. After this Court vacated that decision and remanded for reconsideration in light of *Warner-Jenkinson* (*Shoketsu Kinzoku Kogyo Kabushiki Co. v. Festo Corp.*, 520 U.S. 1111 (1997)), the Federal Circuit panel in 1999 modified its earlier ruling, now affirming in part but remanding for further examination of estoppel issues with respect to the Stoll patent requirement of two sealing rings. Pet. App. 156a-189a.

C. The Federal Circuit's *En Banc* Decision

By the summer of 1999, the Federal Circuit had addressed the applicability and scope of estoppel in a large number of prosecution history estoppel cases since *Warner-Jenkinson*, including in the two cases (along with this one) that this Court remanded for reconsideration in light of *Warner-Jenkinson*.[5] *See* 5A D. Chisum, *Patents* §18.05 (1998 & 2000 Supp.); 13 D. Chisum, *Patents*, Federal Circuit Topical Outline, sections 5410-5418 (summarizing numerous estoppel decisions) (1998 & 2000 Supp.). On August 20, 1999, the Federal Circuit vacated the panel decision and set this case for rehearing *en banc*, stating five doctrinal questions for the parties and *amici* to address, four concerning prosecution history estoppel. *Festo Corp. v. Shoketsu Kinzoku Kogyo Kabushiki Co.*,187 F.3d 1381 (Fed. Cir. 1999); *see* Pet. App. 2a-3a (quoting the five

---

[5]*Litton Systems, Inc. v. Honeywell, Inc.*, 140 F.3d 1449 (Fed. Cir.), *reh'g denied over dissents*, 145 F.3d 1472 (Fed. Cir. 1998); *Hughes Aircraft Co. v. United States*, 140 F.3d 1470 (Fed. Cir.), *reh'g denied over dissents*, 148 F.3d 1384 (Fed. Cir. 1998), *cert. denied*, 525 U.S. 1177 (1999).

questions).[6] On November 29, 2000, the court rendered its *en banc* decision, deciding the estoppel questions and resolving this case. Pet. App. 1a-155a.

The court's rulings, as relevant here, are by their express terms limited to the situation of (a) an amendment made by the patent applicant in the PTO (b) that narrows the claim. That class of amendments can make a difference in infringement litigation only where the narrowing amendment adopted a claim limitation that the accused product or process does not meet literally – so that the patentee alleging infringement must rely on equivalents for that element to meet the requirement (the "all-elements rule") that each claim element be met literally or by an equivalent. *See Warner-Jenkinson*, 520 U.S. at 29. For this class of equivalents cases, the Federal Circuit adopted two rules at issue here.

The court first concluded, by a vote of 11 to 1, that a narrowing amendment generates estoppel if made for any reason related to the statutory requirements for a patent. For such narrowing amendments, the court held, estoppel is not restricted to those made specifically to avoid prior art. The

---

[6]The first question presented in Festo's certiorari petition is substantively the same as the Federal Circuit's question one: "For the purposes of determining whether an amendment to a claim creates prosecution history estoppel, is 'a substantial reason related to patentability,' *Warner-Jenkinson Co. v. Hilton Davis Chem. Co.*, 520 U.S. 17, 33 (1997), limited to those amendments made to overcome prior art under §102 and §103, or does 'patentability' mean any reason affecting the issuance of a patent?" *See* Pet. App. 2a. Festo's second question presented is substantively the same as the Federal Circuit's question three: "If a claim amendment creates prosecution history estoppel, under *Warner-Jenkinson* what range of equivalents, if any, is available under the doctrine of equivalents for the claim element so amended?" Pet. App. 2a-3a.

court explained that "the functions of prosecution history estoppel [the notice function of the claims and the prevention of recapture of surrendered subject matter] cannot be fully satisfied if substantial reasons related to patentability are limited to a narrow subset of patentability issues." Pet. App. 8a-11a.

The court next addressed the scope of the applicable estoppel, *i.e.*, what if any equivalents are precluded, or remain available, when estoppel applies by virtue of a narrowing amendment that is determined to have been made for patentability reasons. By a vote of 8 to 4, the court held that, when such a narrowing amendment generates estoppel, the claim limitation added by the amendment is not subject to equivalents infringement: the patentee's eyes-open choice of the narrowing language defines the boundaries for that claim element.[7] The patentee remains free to establish equivalents for all other elements of the claim. Pet. App. 13a-30a.[8]

---

[7]By a unanimous vote (12-0), the court separately held that *Warner-Jenkinson* bars equivalents infringement for an "unexplained" amendment (such as the "magnetizable material"). Pet. App. 4a.

[8]Although the petition repeatedly suggests that the estoppel ruling in this case eliminates the doctrine of equivalents, that suggestion ignores the express terms of the ruling here. The ruling has no application to any claims that were not amended in the PTO. The ruling likewise has no application to claims amended in a way that does not narrow them. Even for claims that were narrowed by amendment, the ruling applies only to the particular claim limitation introduced by the narrowing amendment: the other elements of even that claim (let alone other claims) remain unaffected, subject to the otherwise-applicable doctrine of equivalents. The estoppel ruling here applies, in short, only to the particular claim elements that were isolated for attention in the PTO and subject to applicant-drafted and applicant-accepted narrowing as a result.

In reaching this conclusion, the court initially reasoned that this Court's decisions, though providing distinct support for this "complete bar" rule, did not settle the issue. Pet. App. 13a-19a. The court further explained that its own precedents over the past 20 years had been inconsistent on this issue, some cases following a "flexible" approach (allowing some undefined range of equivalents for elements added by narrowing amendments), some cases following a strict "no equivalents" approach holding the patentee to the language of the element added by amendment. Pet. App. 19a-24a.[9] The court then resolved the question on the merits by relying on its "nearly twenty years of experience in performing [its] role as the sole court of appeals for patent matters." Pet. App. 24a. It explained, based on its "long experience" (Pet. App. 25a), that the flexible approach was "unworkable" (Pet. App. 25a) because it defeated the definitional and notice function of patent claims, making the boundaries of forbidden territory "virtually unascertainable" and deterring investment in innovation in the proximity of patented subject matter. Pet. App. 28a.

More particularly, the Federal Circuit anchored its refinement of the standards for estoppel in "its special

[9]The "flexible" approach grew out of *Hughes Aircraft Co. v. United States*, 717 F.2d 1351 (Fed. Cir. 1983) [*Hughes I*], which stated that estoppel, once found applicable, "may have a limiting effect" on available equivalents "within a spectrum ranging from great to small to zero." *Id.* at 1363. (The *Hughes Aircraft* litigation continued for a quarter century. *See* note 5, *supra*.) The stricter approach was articulated almost contemporaneously in *Kinzenbaw v. Deere & Co.*, 741 F.2d 383 (Fed. Cir. 1984), *see* Pet. App. 20a, as well as by pre-Federal Circuit regional appellate court precedent, *see, e.g.*, *Nationwide Chemical Corp. v. Wright*, 584 F.2d 714, 718-20 (5th Cir. 1978); *Ekco Prods. Co. v. Chicago Metallic Mfg. Co.*, 347 F.2d 453, 454-55 (7th Cir. 1965).

expertise" based on its unique experience, as contemplated by *Warner-Jenkinson*, 520 U.S. at 40. The court explained:

> Congress contemplated that the Federal Circuit would "strengthen the United States patent system in such a way as to foster technological growth and industrial innovation." *Markman [v. Westview Instruments, Inc.]*, 517 U.S. [370, 390 (1996)]. Issues such as the one before us in this case are properly reserved for this court to answer with "its special expertise." *Warner-Jenkinson*, 520 U.S. at 40 (reserving explicitly for the Federal Circuit the task of formulating the proper test(s) for infringement under the doctrine of equivalents).

Pet. App. 19a. On the scope-of-estoppel issue, the Federal Circuit elaborated:

> Our decision to reject the flexible bar approach adopted in *Hughes I* comes after nearly twenty years of experience in performing our role as the sole court of appeals for patent matters. In those years, the notice function of patent claims has become paramount, and the need for certainty as to the scope of patent protection has been emphasized. A problem with the flexible bar approach is that it is virtually impossible to predict before the decision on appeal where the line of surrender is drawn.

Pet. App. 24a-25a. Based on its unique position in applying the "judicially created doctrine" in this area over almost 20 years

(Pet. App. 19a), the Federal Circuit concluded that the flexible bar approach was simply "unworkable." Pet. App. 25a.

> We believe that the current state of the law regarding the scope of equivalents that is available when prosecution history estoppel applies is "unworkable." In patent law, we think that rules qualify as "workable" when they can be relied upon to produce consistent results and give rise to a body of law that provides guidance to the marketplace on how to conduct its affairs. After our long experience with the flexible bar approach, we conclude that its "workability" is flawed.

The Federal Circuit explained that "the flexible bar approach 'poses a direct obstacle to the realization of important objectives'" (Pet. App. 26a) by leaving the range of equivalents "virtually unascertainable" (Pet. App. 28a), whereas "under the complete bar approach, technological advances that would have lain in the unknown, undefined zone around the literal terms of a narrowed claim under the flexible bar approach will not go wasted and undeveloped due to fear of litigation" (Pet. App. 30a).[10]

Applying the announced legal standards, the Federal Circuit readily concluded that prosecution history estoppel

---

[10]The court observed that this conclusion was supported, in particular, by three prominent patent *holders* (IBM, Kodak, and Ford), who advocated this resolution of the issue, despite its limiting effect on their own patents, because of the overriding importance to research-based companies of the ability to ascertain the boundaries of a patent monopoly without expensive and time consuming litigation.

barred Festo's assertions of infringement by equivalents. It concluded that the requirement of two sealing rings added to the Stoll main claim and to the Carroll main claim were both added *to avoid prior art*. Pet. App. 52a, 55a. Under the complete bar rule, that limitation had no range of equivalents. Pet. App. 51a-56a. The court concluded that the amendment to the Stoll patent to require magnetizable material was unexplained. Pet. App. 44a, 50a. That limitation had no range of equivalents under the express presumption, and consequent bar on equivalents, from *Warner-Jenkinson*. *See* Pet. App. 49a-51a. For multiple reasons, therefore, Festo could not assert infringement under the doctrine of equivalents for either patent. Pet. App. 48a-56a.

REASONS FOR DENYING THE PETITION

This case does not warrant further review. Although petitioner argues that the decision below will dramatically alter the course of patent law, the fact is that the *en banc* Federal Circuit has done just what it was created to do: applying its own unique expertise, it has resolved two open questions of patent law in ways that are consistent with the goals of patent law generally and with the applicable decisions of this Court. There is no reason to disturb this sound and workable result.

A. Festo's First Question Presented Does Not Warrant Review

Petitioner first challenges the Federal Circuit's ruling that estoppel applies when an "explained" narrowing amendment is made to satisfy any of the requirements of patentability, not just those addressed to prior art. That ruling does not warrant review. *First*, petitioner has overstated the breadth of the ruling – rendered by an all-but-unanimous vote – by simply

ignoring the fact that it applies only to "an amendment that *narrows* the scope of a claim." Pet. App. 3a (emphasis added); *id.* at 9a ("narrowing" amendment). *Second*, the ruling is correct: the only sensible and workable principle is that the public message of surrender of initially claimed territory by intentional narrowing is equally communicated whenever the narrowing was made to satisfy a requirement of patentability. *Third*, this case plainly involves amendments made to avoid prior art (and an unexplained amendment), making this case a poor vehicle for review of the issue in any event.

1. The Federal Circuit properly held, with just one judge in disagreement, that prosecution history estoppel applies to "explained" narrowing amendments made for reasons other than to overcome prior art. In so doing, the court declared that estoppel may be invoked as long as two conditions are met: the amendment must be a narrowing amendment, and it must be made for a "reason related to the statutory requirements for a patent." Pet. App. 9a. The court reasoned that "the functions of prosecution history estoppel cannot be fully satisfied if substantial reasons related to patentability are limited to a narrow subset of patentability issues." Pet. App. 11a.

Petitioner complains about the supposedly unlimited scope of the holding, Pet. 2, but that complaint mischaracterizes the holding by ignoring its terms. In addition to the fact that the estoppel ruling has no effect on unamended claims or on unamended elements of amended claims (*see* note 8, *supra*), petitioner conspicuously disregards the express limit on the court's ruling to only "narrowing" amendments. The Federal Circuit, in setting out its "response to En Banc Question 1" in its introductory synopsis, stated plainly: "an amendment that *narrows the scope* of a claim for any reason related to the statutory requirements for a patent will give rise

to prosecution history estoppel with respect to the amended claim element." Pet. App. 3a (emphasis added). In the part of the opinion explaining that answer, the court again stated its holding: "a *narrowing* amendment made for any reason related to the statutory requirements for a patent will give rise to prosecution history estoppel with respect to the amended claim element." Pet. App. 9a (emphasis added). It is simply not the case, therefore, that any amendment made to satisfy requirements for issuance of the patent will generate estoppel. Rather, the ruling below applies estoppel only to those amendments that narrow the scope of the claimed monopoly.

2. Petitioner also fails to make any real case against the Federal Circuit's holding. Although petitioner suggests (though never squarely contends) that estoppel should be limited to those amendments made to overcome prior art, it does not explain why that limitation would serve, or even comport with, the patent laws. Petitioner never (a) concretely identifies some particular class of amendments that actually narrow the patent claim to satisfy a patentability requirement and (b) elaborates an argument for why estoppel nevertheless should not apply to that class of amendments. Petitioner, accordingly, has presented a grievance without an argument.

The holding below, in fact, makes eminent sense. As the Federal Circuit observed, the requirements for securing the exclusive rights of a patent are all statutory preconditions that, if not met, result in denial of the claim: *e.g.*, statutory subject matter and utility, 35 U.S.C. §101; novelty and nonobviousness in light of prior art, 35 U.S.C. §§102, 103; sufficient disclosure to provide the essential *quid pro quo* for the patent, 35 U.S.C. §112, ¶1; conformity of the claims to match what the applicant regards as his invention, 35 U.S.C. §112, ¶2; sufficient definiteness to establish knowable boundaries, 35 U.S.C. §112,

¶2. All of them are part of the bargain underlying the patent grant: exclusivity in return for an advance in knowledge that is sufficiently disclosed to be effectively put in the public domain and well enough defined to prevent deterrence of further innovation from uncertainty about the monopolized territory.[11] As a result, whenever the patentee's attention is, for *any* of these reasons, squarely focused on particular claim elements, and the patentee *narrows* by amendment to avoid rejection for any of these reasons, prosecution history estoppel properly applies to the resulting amendment.

The decision of the Federal Circuit strikes precisely the right balance between the rights of patentees and the rights of the public. Regardless of which patentability requirement leads to an amendment, it is the patent applicant that, with attention precisely focused on the particular claim limitations, fairly must bear the burden of clear definition, rather than leave the public with uncertainty about the scope of exclusivity with respect to the added claim limitation. Any disagreement by the patent applicant with an examiner's rejection for any such reason, moreover, can be appealed within the PTO (and ultimately the courts). Both the notice and the administrative-bypass policies behind prosecution history estoppel are equally applicable regardless of which patentability requirement leads to the narrowing amendment. And obvious practical difficulties infect any attempt to distinguish among the various requirements for patentability: for example, if the §112 definiteness requirement did not generate estoppel, an applicant

---

[11] *See, e.g.*, *Bonito Boats, Inc. v. Thunder Craft Boats, Inc.*, 489 U.S. 141, 146-52 (1989); *Universal Oil Prods. Co. v. Globe Oil & Refining Co.*, 322 U.S. 471, 484 (1944); *United Carbon Co. v. Binney & Smith Co.*, 317 U.S. 228, 236 (1942); *General Elec. Co. v. Wabash Appliance Corp.*, 304 U.S. 364, 369 (1938).

could easily attempt to manipulate the PTO record to try to re-characterize an amendment made in response to some prior art as really just a clarification. *See Loral Fairchild Corp. v. Sony Corp.*, 181 F.3d 1313, 1326 (Fed. Cir. 1999) (noting applicant's attempts in the PTO to discuss prior art rejection "under the rubric of a clarification" to escape estoppel); *BAI v. L & L Wings*, 160 F.3d 1350, 1355 (Fed. Cir. 1998). Nothing petitioner has said undermines the Federal Circuit's ruling.

Petitioner ultimately falls back on the charge that the ruling below is inconsistent with *Warner-Jenkinson*. But nowhere in *Warner-Jenkinson* did this Court restrict prosecution history estoppel to amendments "made to avoid the prior art." Moreover, a limitation of estoppel to only those reasons is inconsistent with the Court's statement that addition of a claim element made for other reasons does "not *necessarily* preclude infringement by equivalents of that element," indicating that it very well may. 520 U.S. at 30-31. In short, the decision in *Warner-Jenkinson* did not, and did not purport to, tie the hands of the Federal Circuit on this issue, and its resolution of the issue is both permissible and correct.

3. This case, in any event, is a particularly poor vehicle for review of this issue. The Federal Circuit expressly and correctly held that amendments for both patents were made to avoid prior art (Pet. App. 52a, 55a), a reason whose estoppel-generating character has never been in dispute. On this basis alone, estoppel applies to both patents. In addition, the remaining claim limit – the requirement that the sleeve be made of magnetizable material – was held by the Federal Circuit to have been made for reasons that remain a "mystery," thus falling squarely under this Court's express ruling in *Warner-Jenkinson* that a bar applies when the presumption of a patentability-related reason is not overcome.

Notably, none of these amendments presents the situation of an amendment made *merely* to eliminate a problem of indefiniteness, or lack of clarity, under the "particularly point out and distinctly claim" requirement of 35 U.S.C. §112, ¶2. Any review of that circumstance should, at a minimum, await a case involving such an amendment where the Federal Circuit also concludes that the amendment was a narrowing one. The question is not presented in this case, where dispositive amendments were made to avoid prior art or for an unexplained reason.

B. Festo's Second Question Presented Does Not Warrant Review

The Federal Circuit's scope-of-estoppel ruling also does not warrant review. *First*, on what is essentially a common-law issue, without specific statutory text controlling its resolution, the decision correctly rests on a basis uniquely within the Federal Circuit's expertise: the actual experience of resolving scope-of-estoppel issues in large numbers of cases over a long period of time, experience showing that the flexible approach produces an uncertainty fundamentally inconsistent with the notice policy of the patent law. *Second*, although Festo argues otherwise, the Federal Circuit's decision is strongly supported by this Court's precedents. *Third*, the decision is a necessary resolution of a long-recognized uncertainty about the standards governing this issue within Federal Circuit precedent, an uncertainty that defeats Festo's assertion of reasonable reliance on the flexible approach now properly rejected and abandoned. For these reasons, the Federal Circuit's resolution of the scope-of-estoppel issue should be allowed to stand.

1. The Federal Circuit rested its decision on its unique experience in determining the scope of estoppel, week in and

week out, from often-cryptic PTO records in myriad circumstances.[12] It was squarely on that basis that the Federal Circuit concluded that the "flexible" approach (sometimes but not always followed) left so much uncertainty to the process of defining the scope of patent coverage as to undermine the core statutory policy behind the "claim" system – to provide the public, including other inventors and competing firms, a high degree of clarity as to the boundaries of the walled-off area. In exercising its authority to continue the process of elaborating what is essentially judge-made law (prosecution history estoppel being the crucial judge-made check on the judge-made doctrine of equivalents), the Federal Circuit relied centrally on the lesson of its uniquely possessed experience to conclude that the uncertainty fostered by continuing the "flexible" approach was simply too high a price to pay for any perceived benefit from maintaining flexibility.

There is no reason for this Court to overturn that experience-based judgment. Although this Court has resolved important issues of patent law, there is no way that it can replicate the close familiarity that the Federal Circuit has obtained with the repeated need to resolve disputes about application of the doctrine of equivalents, including the prosecution history estoppel limit on that doctrine. This Court, upon hearing the self-interested views of parties and *amici*, would not be able to turn to its own experience to assess what is ultimately the critical factor in determining the best approach

---

[12]It has long been settled, and is not disputed in this case, that prosecution history estoppel is a matter of law for the court to decide. *See, e.g.*, Pet. App. 45a; *Cybor Corp. v. FAS Technologies, Inc.*, 138 F.3d 1448, 1460 (Fed. Cir. 1998) (*en banc*); *LaBounty Manufacturing, Inc. v. ITC*, 867 F.2d 1572, 1576 (Fed. Cir. 1989).

to the scope of prosecution history estoppel.[13] Nor, at least at this time, could the Court turn to any substantial body of experience *under* the decision below to help it evaluate the merits of the ruling.

In these circumstances – on an essentially common-law issue, where extensive practical experience in resolving the particular issue is crucial to determining the best approach – this Court should defer to the Federal Circuit, at least until a record of experience develops in applying the decision. Of course, even aside from possible future intervention by this Court, the Federal Circuit's decision is subject to continuing doctrinal evolution by that court as experience develops. Congress, too, may consider any appropriate changes after

---

[13] *Amici*, who are likely to be divided, are unlikely to provide a satisfactory substitute for the kind of direct experience with estoppel cases that the Federal Circuit possessed. Some businesses as *amici* – like IBM, Kodak, and Ford, whose *amicus* brief the Federal Circuit cited (Pet. App. 25a-26a) – may have broadly balanced interests, focused on the long term, as both holders of numerous patents and potential infringers. Some *amici*, in contrast, may have interests driven mainly by current litigation or otherwise have sufficiently narrow perspectives that, unlike IBM, Kodak, and Ford, they did not even respond to the Federal Circuit's invitation for *amicus* participation in the *en banc* proceedings. *See* 234 F.3d at 561-62 (listing participants). Some *amici* may make general, contentious, and hard-to-evaluate pleas that equivalents protection is needed in particular areas, such as biotechnology. *But see* Pet. App. 68a-69a (Lourie, J., concurring) (noting that dissent's biotechnology example is "largely theoretical" given undisputed need for adequate description and enablement, that predictability in estoppel should enhance innovation, and that, to date, "no court has rendered a decision holding infringement only under the doctrine of equivalents by an accused gene or protein"). Some *amici*, including some organizations of patent lawyers, might have membership so divided that they will not contribute anything of substance or, indeed, might be institutionally disposed to discount the value of reducing litigation-breeding uncertainty.

conducting the sort of empirical inquiry to which it is institutionally well suited, hearing competing views about the relevant policy balance from all interested parties.

The scope-of-estoppel issue here is sharply different in kind from the issues resolved in recent patent cases decided by this Court, where the bases for decision were not rooted in extensive practical experience in applying substantive patent standards. For example, the 1996 decision in *Markman*, 517 U.S. 370, involved constitutional analysis coupled with consideration of the nature of the task in interpreting documents. Similarly, the 1998 decision in *Pfaff v. Wells Electronics, Inc.*, 525 U.S. 55 (1998), involved ordinary analysis of statutory and precedential materials. Likewise, the 1999 decision in *Dickinson v. Zurko*, 527 U.S. 150 (1999), involved the standard of review for PTO administrative findings. Even in *Warner-Jenkinson*, which did deal with the essentially judge-made doctrine of equivalents, the Court stopped its own analysis precisely at the point where the task of doctrinal refinement required judgment beyond this Court's experience. It re-affirmed the availability of equivalents infringement based on pre-1952 precedent; recognized the problem of uncertainty of patent scope and approved two important limits on equivalents infringement (element-by-element equivalents, prosecution history estoppel); affirmed the absence of a special intent or disclosure requirement; then specifically left the task of further doctrinal refinement to the Federal Circuit because of its expertise. What makes the present case distinctively ill-suited for displacement of the Federal Circuit's judgment is that it involves an essentially "common-law" issue where the driving factor for decision is extensive practical judicial experience in the case-specific application of a general legal standard across a wide range of particular facts.

The Federal Circuit's reliance on its practical experience is precisely what Congress contemplated in assigning exclusive appellate jurisdiction over patent matters to that court. And it is precisely what this Court called for at the conclusion of *Warner-Jenkinson*. 520 U.S. at 39-40. The Federal Circuit used its own experience of how uncertain the "flexible" approach is to make just the sort of doctrinal refinement this Court contemplated when leaving the task of further elaboration of the doctrine of equivalents to the Federal Circuit.

On the merits, the Federal Circuit correctly and clearly explained why the flexible approach to the scope of estoppel was "unworkable" in the sense directly relevant to the statutory policies underlying the claiming system. The court explained – based upon its long and extensive experience in deciding these issues – that "the flexible bar approach 'poses a direct obstacle to the realization of important objectives'" of the patent laws (Pet. App. 26a), namely, protection of the public's interest in ascertaining patent boundaries, so that "technological advances" lying in some "unknown, undefined zone around the literal terms of a narrowed claim . . . will not go wasted and undeveloped due to fear of litigation" (Pet. App. 30a). The Federal Circuit's conclusion properly reduces the "'zone of uncertainty which enterprise and experimentation may enter only at the risk of infringement claims . . . [and which] discourage[s] invention only a little less than unequivocal foreclosure of the field.'" Pet. App. 29a (quoting *Markman*, 517 U.S. at 390, and *United Carbon*, 317 U.S. at 236).[14]

---

[14]Festo's condemnation as a "would-be copyist" of anyone who designs a product to avoid the boundaries of existing patents (Pet. 2-3) is contrary to the well established proposition that patent law positively encourages efforts to "design around" existing patents. *See, e.g., Slimfold Mfg. Co. v. Kinkead Industries, Inc.*, 932 F.2d 1453, 1457 (Fed. Cir. 1991).

2. The lion's share of Festo's argument is the accusation that the Federal Circuit has departed from *Warner-Jenkinson*. That contention is wrong. As the Federal Circuit itself carefully explained (Pet. App. 13a-19a), its scope-of-estoppel ruling is plainly the position most consistent with and supported by – if not the ineluctable result of – the precedents of this Court, including *Warner-Jenkinson*.

It is directly supported by two aspects of *Warner-Jenkinson*. First, this Court expressly stated that there is no equivalents where estoppel is held to apply to a claim-narrowing amendment based on a presumption of patentability-related reasons for amendments. 520 U.S. at 33 (failure to rebut presumption means that "prosecution history estoppel would *bar* the application of the doctrine of equivalents to that element") (emphasis added). That rule, however, naturally applies as well to situations in which it has been *established* that the reason for the amendment is a substantial reason related to patentability. There is no sound reason – certainly Festo has offered none – to give greater play to the doctrine of equivalents where it is known, rather than merely presumed, that patentability-related reasons explain the amendment.[15]

---

[15]*See Litton Sys.*, 145 F.3d at 1476 (Gajarsa, J., dissenting from denial of rehearing) ("It defies logic to read *Warner-Jenkinson* to hold that an amendment that is known to have been made for patentability reasons is to be treated differently than an amendment that is *presumed* to have been made for patentability reasons."); Pet. App. 65a-66a (Lourie, J., concurring) ("In fact, today we merely extend the Supreme Court's complete bar against the application of the doctrine of equivalents, which applies when it is unclear why an amendment was made and the patentee fails to rebut the presumption that an amendment was made for reasons relating to patentability, to cases in which the patentee clearly amended a claim for patentability reasons.").

More broadly, the Court in *Warner-Jenkinson* expressly and pointedly referred to the prosecution history estoppel part of its opinion, containing the estoppel principles just mentioned, when it stated that the uncertainty-fostering aspects of the doctrine of equivalents could be kept under control so as not to defeat the "definitional and public-notice functions of the statutory claiming requirement." 520 U.S. at 29; *id.* at 29-30 ("So long as the doctrine of equivalents does not encroach beyond the limits just described [vitiating any element], *or beyond related limits to be discussed infra this page and 31-34, 39, n.8, and 39-40*, we are confident that the doctrine will not vitiate the central functions of the patent claims themselves." (emphasis added)). Petitioner is thus wrong in its pervasive suggestion that *Warner-Jenkinson* demanded a flexible case-by-case doctrine of equivalents unlimited by prosecution history estoppel. To the contrary, *Warner-Jenkinson* expressly premised its re-affirmation of the doctrine on its recognition that prosecution history estoppel was a critical check on the doctrine and its threat to the proper functioning of the claiming system.

The Federal Circuit's ruling is also supported by this Court's governing precedents on prosecution history estoppel (or "file wrapper estoppel") before *Warner-Jenkinson*. The most pertinent such precedent is the last estoppel decision by this Court prior to the 1952 Act, *Exhibit Supply Co. v. Ace Patents Corp.*, 315 U.S. 126 (1942), on which *Warner-Jenkinson* itself placed primary reliance in discussing estoppel. *Exhibit Supply* is entitled to the same weight as a culmination of prior law as was given in *Warner-Jenkinson*, on the general availability of the doctrine of equivalents, to *Graver Tank & Mfg. Co. v. Linde Air Prods. Co.*, 339 U.S. 605 (1950), a decision that involved no issue of estoppel.

The Federal Circuit's ruling here is directly supported by *Exhibit Supply*. That decision capped a series of stringent decisions relying on estoppel to limit equivalents infringement.[16] The Court expressly stated the scope of estoppel in terms practically indistinguishable from the Federal Circuit ruling here: a patentee surrenders all that was embraced within the unamended claim but omitted from the amended claim. "By the amendment, he recognized and emphasized the difference between the two phrases [before and after the amendment] and *proclaimed his abandonment of all that is embraced in that difference*." 315 U.S. at 136 (emphasis added). That principle is the culmination of earlier pronouncements stressing that a patentee is limited to the claim-narrowing choices made during prosecution. *See* Pet. App. 26a-27a.

3. The Federal Circuit's doctrinal refinement was not only a natural and well-justified response to the harmful uncertainty that comes from too flexible a case-by-case approach. It also was a resolution of a longstanding and well-recognized uncertainty over the approach within the Federal Circuit's own case law. As the majority explained, and as was widely recognized (5A D. Chisum, *Patents* § 18.05[3][b], at 18-492 (1998); Strawbridge et al., Area Summary, *Patent Law Developments in the United States Court of Appeals for the Federal Circuit During 1986*, 36 Am. U.L.Rev. 861, 887-88 (1987); Smith, *The Federal Circuit's Modern Doctrine of Equivalents in Patent Infringement*, 29 Santa Clara L. Rev.

---

[16] *E.g.*, *Schriber-Schroth Co. v. Cleveland Trust* Co., 311 U.S. 211, 220-22 (1940); *Smith v. Magic City Kennel Club*, 282 U.S. 784, 790 (1931); *Weber Elec. Co. v. E.H. Freeman Elec. Co.*, 256 U.S. 668, 677-78 (1921); *Shepard v. Carrigan*, 116 U.S. 593, 598 (1886); *Goodyear Dental Vulcanite Co. v. Davis*, 102 U.S. 222, 228 (1880).

901, 921 (1989); Note, *To Bar or Not to Bar: Prosecution History Estoppel After Warner-Jenkinson*, 111 Harv. L. Rev. 2330, 2336 (1998); Otterstedt, *Unwrapping File Wrapper Estoppel in the Federal Circuit: A New Economic Policy Approach*, 67 St. John's L. Rev. 405 (1993)), there were two distinct lines of authority on the approach to determining scope of estoppel – the *Kinzenbaw* and *Hughes I* lines of authority. *See* note 9, *supra*. Both approaches remained very much alive, as in recent years, the stricter approach was embodied in a number of decisions that relied on nothing more than the terms of the narrowing amendment to hold that estoppel barred equivalents coverage of the accused product or process.[17]

Against this background, there is simply no sound basis for the assertion that the Federal Circuit's doctrinal clarification upsets a substantial and reasonable reliance interest of patentees. Any such assertion, of course, must be assessed carefully; otherwise, doctrinal evolution would be subject to a one-way ratchet of ever-increasing patent protection. In the present case, there can be no reliance basis to upset the otherwise-justified doctrinal clarification of the Federal Circuit.

As an initial matter, it is unreasonable for a patentee during the PTO prosecution, when deciding how to respond to a need for claim narrowing, to decide not to act with care in defining the claim-narrowing limitation and instead to rely on post-PTO infringement litigation to resolve uncertainty as to

---

[17]*E.g.*, *Wang Laboratories, Inc. v. Mitsubishi Electronics America*, Inc., 103 F.3d 1571 (Fed. Cir. 1997); *Wang Laboratories Inc. v. Toshiba Corp.*, 993 F.2d 858 (Fed. Cir. 1993); *Charles Greiner & Co. Inc. v. Mari-Med Mfg. Inc.*, 962 F.2d 1031 (Fed. Cir. 1992); *Dixie USA Inc. v. Infab Corp.*, 927 F.2d 584 (Fed. Cir. 1991) *Senmed, Inc. v. Richard-Allen Medical Industries, Inc.*, 888 F.2d 815 (Fed. Cir. 1989).

the available scope of non-literal infringement for the chosen narrowing claim element. *See* Pet. App. 67a (Lourie, J., concurring). Given the well-recognized patent law commitment to protecting the public's need to know the boundaries of forbidden territory, and the patentee's broad ability to define claims carefully when attention is focused on a particular element in the PTO, only the clearest and most firmly established law could reasonably entitle the patent applicant to indulge a reliance on such uncertainty. But the Federal Circuit's own case law makes any such reliance flatly impossible. Patentees have for decades been subject to at least two forms of profound uncertainty about even the estoppel effect of their PTO amendments: the uncertainty about which legal approach would govern; and the inherent uncertainty about how the flexible approach would be applied in a particular case.[18]

In fact, a review of the 52 decisions cited for the flexible approach by Judge Michel in dissent below (Pet. App. 97a-103a) conclusively repudiates any assertion that patentees could reasonably have relied on the flexible approach, as opposed to the complete bar approach, as protection for potential infringement claims. Simply: in only a small fraction of those cases *could* the complete-bar rule have made a difference in the patentee's ability to prevail on its infringement claim. Most obviously, even aside from whether a truly flexible approach was applied in all the cited cases (*but see*

---

[18]There is also inherent uncertainty in arguing the "exception" rather than the "rule." *See London v. Carson Pirie Scott & Co.*, 946 F.2d 1534, 1536 (Fed. Cir. 1991) ("the doctrine of equivalents is the exception, however, not the rule"). Although expensive litigation has often been necessary, historically it has been the case that "the overwhelming majority of equivalence claims ultimately fail." Pet. App. 68a (Lourie J. concurring).

note 17, *supra*) the patentee in 31 of the cases lost on estoppel or other equivalents grounds, so the complete bar rule could not have made a difference.[19] The rule likewise could not have

[19]*See Bayer Aktiengesellschiaft v. Duphar Int'l Research B.V.*, 738 F.2d 1237, 1243 (Fed. Cir. 1984); *Mannesmann Demag Corp v. Engineered Metal Prod. Co., Inc.*, 793 F.2d 1279, 1284 (Fed. Cir. 1986); *Chemical Eng'g Corp. v. Essef Indus., Inc.*, 795 F.2d 1565, 1573 n.8 (Fed. Cir. 1986); *Townsend Eng'g Co. v. Hitec Co., Ltd.*, 829 F.2d 1086, 1090 (Fed. Cir. 1987); *Tandon Corp. v. United States Int'l Trade Comm'n*, 831 F.2d 1017, 1026-1027 (Fed. Cir. 1987); *Pennwalt Corp. v. Durand-Wayland, Inc.*, 833 F.2d 931, 938, 939 n.2 (Fed. Cir. 1987 (*en banc*); *Diversitech Corp. v. Century Steps, Inc.*, 850 F.2d 675, 681 (Fed. Cir. 1988); *Environmental Instruments, Inc. v. Sutron Corp.*, 877 F.2d 1561, 1566 (Fed. Cir. 1989); *Jonsson v. Stanley Works*, 903 F.2d 812, 817 (Fed. Cir. 1990); *Dixie USA, Inc. v. Infab Corp.*, 927 F.2d 584, 587-588 (Fed. Cir. 1991); *Charles Greiner & Co. v. Mari-Med Mfg.*, 962 F.2d 1031, 1036 (Fed. Cir. 1992); *Texas Instruments, Inc. v. U.S. Int'l Trade Comm'n*, 988 F.2d 1165, 1174-1175 (Fed. Cir. 1993); *Wang Laboratories, Inc. v. Toshiba Corp.*, 993 F.2d 858, 867-868 (Fed. Cir. 1993); *Hoganas AB v. Dresser Indus., Inc.*, 9 F.3d 948, 951 (Fed. Cir. 1993); *Genentech, Inc. Wellcome Found., Ltd.*, 29 F.3d 1555, 1567 (Fed. Cir. 1994); *Southwall Technologies, Inc. v. Cardinal IG Co.*, 54 F.3d 1570, 1579 (Fed. Cir. 1995); *Athletic Alternatives, Inc. v. Prince Mfg., Inc.*, 73 F.3d 1573, 1582 (Fed. Cir. 1996); *Wang Labs, Inc. v. Mitsubishi Elecs. Amer., Inc.*, 103 F.3d 1571, 1578 (Fed. Cir. 1997); *Lockwood v. American Airlines, Inc.*, 107 F.3d 1565, 1574-1575 (Fed. Cir. 1997); *Laitram Corp. v. Morehouse Indus., Inc.*, 143 F.3d 1456, 1464 (Fed. Cir. 1998); *EMI Group North America, Inc. v. Intel Corp.*, 157 F.3d 887, 897 (Fed. Cir. 1998); *Desper Prod. Inc. v. QSound Labs, Inc.*, 157 F.3d 1325, 1338 (Fed. Cir. 1998); *BAI v. L & L Wings*, 160 F.3d 1350, 1356 (Fed. Cir. 1998); *Pharmacia & Upjohn v. Mylan Pharmaceuticals*, 170 F.3d 1373, 1377 (Fed. Cir. 1999); *Sextant Avionique, S.A. v. Analog Devices, Inc.*, 172 F.3d 817, 830-832 (Fed. Cir. 1999); *Augustine Med. Inc. v. Gaymar Indus. Inc.*, 181 F.3d 1291, 1298 (Fed. Cir. 1999); *Loral Fairchild Corp. v. Sony Corp.*, 181 F.3d 1313, 1323 (Fed. Cir. 1999); *Merck Co. v. Mylan Pharms. Inc.*, 190 F.3d 1335, 1341 (Fed. Cir. 1999); *K-2 Corp. v. Salomon S.A.*, 191 F.3d 1356, 1368 (Fed. Cir. 1999); *Bayer AG v. Elan Pharm. Research Corp.*, 212 F.3d 1241, 1251 (Fed. Cir. 2000); *KCJ Corp. v. Kinetic Concepts, Inc.*, 223 F.3d 1351, 1358 (Fed. Cir. 2000).

made a difference in the cases where the element requiring an equivalent was not added by amendment,[20] or that involved no assertion of equivalents infringement,[21] or in which the patentee later lost or won on grounds mooting any equivalents issue.[22]

Only a small group of Judge Michel's cases raise even a possibility of a different outcome based on the scope-of-estoppel ruling here, and even that possibility is uncertain in many of the cases. Several say nothing about scope of estoppel, addressing only whether estoppel applies at all;[23] one

[20]*Loctite Corp. v. Ultraseal Ltd.*, 781 F.2d 861, 871 (Fed. Cir. 1985); *Sun Studs, Inc. v. ATA Equip. Leasing, Inc.*, 872 F.2d 978, 987 (Fed. Cir. 1989); *Hormone Research Found., Inc. v. Genentech, Inc.*, 904 F.2d 1558, 1564 (Fed. Cir. 1990); *Insta-Foam Products, Inc. v. Universal Foam Systems, Inc.*, 906 F.2d 698, 703 (Fed. Cir. 1990); *Cybor Corp. v. FAS Tech., Inc.*, 138 F.3d 1448, 1460 (Fed. Cir. 1998) (*en banc*).

[21]*Water Technologies Corp. v. Calco, Ltd.*, 850 F.2d 660, 666-67 (Fed. Cir. 1988), involved only literal infringement, not a doctrine of equivalents claim. *Bayer, supra*, involved no equivalents issue in the Federal Circuit.

[22]The patent at issue in *LaBounty Mfg., Inc. v. ITC*, 867 F.2d 1572, 1576 (Fed. Cir. 1989) (remanding on estoppel), was later held unenforceable. *LaBounty Mfg., Inc. v. ITC*, 958 F.2d 1066 (Fed. Cir. 1992). The patentee in *Laitram Corp. v. NEC Corp.*, 952 F.2d 1357, 1361 (Fed. Cir. 1991) (remanding on estoppel), eventually won on literal infringement. *Laitram Corp. v. NEC Corp.*, 62 F.3d 1388 (Fed. Cir. 1995).

In *Black & Decker, Inc. v. Hoover Service Center*, 886 F.2d 1285, 1295 (Fed. Cir. 1989), not only is it unclear whether there was a narrowing amendment, but the district court subsequently found likely invalidity of the patent. *See* 765 F. Supp. 1129 (D. Conn. 1991).

[23]*Great Northern Corp. v. Davis Core & Pad Co., Inc.*, 782 F.2d 159 (Fed. Cir. 1986); *Moeller v. Ionetics, Inc.*, 794 F.2d 653, 659 (Fed. Cir.

case resulted in a district court holding that equivalents was barred on estoppel and multiple other grounds;[24] one remanded for determination of the range of still-available equivalents.[25] In only a handful of decisions does it appear that the result would have changed under the scope-of-estoppel rule here.[26]

1986) (remanding on estoppel); *Hi-Life Prod. Inc. v. American Nat'l Water Mattress Corp.*, 842 F.2d 323, 325 (Fed. Cir. 1988) (remanding to determine what range of equivalents was left to patentee). *Hilton Davis Chem. Co. v. Warner-Jenkinson Co.*, 62 F.3d 1512, 1525 (Fed. Cir. 1995), after reversal by this Court, 520 U.S. 17 (1997), was further remanded by the Federal Circuit for consideration of whether estoppel applied at all, 114 F.3d 1161 (Fed. Cir. 1997). There is no reason to think that the presumption of a patentability-related reason for the amendment at issue could be overcome.

In *Vaupel Textilmashinen v. Meccanica Euro Italia*, 944 F.2d 870, 881-82 (Fed. Cir. 1991), it is not clear whether a narrowing amendment was made; and in any event, the case appears to be one, like the *Warner-Jenkinson* case, where the patentee could not overcome the presumption of a patentability-related reason for the amendment.

[24]In *Litton System, Inc. v. Honeywell, Inc.*, 140 F.3d 1449 (Fed. Cir. 1998), the Federal Circuit remanded for further inquiry into of the scope of estoppel; the district court on remand held equivalents barred by estoppel and by several other grounds. *See Litton System, Inc. v. Honeywell, Inc.*, 238 F.3d 1376, 1378 (Fed. Cir. 2001) (briefly describing district court decision), petition for certiorari filed, No. 00-1617 (filed Apr. 23, 2001).

[25]*Modine Mfg. Co. v. United States*, 75 F.3d 1545, 1556 (Fed. Cir. 1996).

[26]The Hughes Aircraft case is one: *Hughes Aircraft Co. v. United States*, 717 F.2d 1351, 362 (Fed. Cir. 1983), and *Hughes Aircraft Co. v. United States*, 140 F.3d 1470, 1476 (Fed. Cir. 1998), *cert. denied*, 525 U.S. 1177 (1999). The dispute between Insituform Technologies and Cat Contracting is another: *Insituform Tech., Inc. v. Cat Contracting, Inc.*, 99 F.3d 1098, 1101 (Fed. Cir. 1996), and *Insituform Tech., Inc. v. Cat Contracting, Inc.*,

In this context – especially when viewed along with the *Kinzenbaw*-based cases rejecting equivalents by simple recitation of the patentee's narrowing amendment – it is evident that there is no sound basis for any assertion that patentees could reasonably rely on the flexible approach to prevail in securing infringement judgments. The impact of the Federal Circuit ruling on bottom-line results is demonstrably quite limited – though its impact on reducing the costs of litigation leading to such results is significant.

In short, the Federal Circuit resolved a longstanding uncertainty in an area of judge-made patent law, resting its resolution on its extensive experience to conclude that the flexible approach was unworkable and created undue uncertainty for the public, and adopting instead a doctrine that enhances rather than undermines the critical definitional and notice function of patent claims. That resolution is strongly supported by this Court's precedents. Far from upsetting any reasonable reliance interests on one strand of the pre-existing precedents contradicted by others, the ruling does just what the Federal Circuit was established to do: make doctrinal refinements based on the experience and expertise it has garnered from the congressional commitment to it of exclusive appellate jurisdiction over patent cases. The Federal Circuit's decision should stand.

---

161 F.3d 688 (Fed. Cir. 1998), *vacated in part*, 2001 WL 294164 (Fed. Cir. Mar. 24, 2001). The decision in *Pall Corp. v. Micron Separations, Inc.*, 66 F.3d 1311 (Fed. Cir. 1995), appears to be another.

CONCLUSION

The petition for a writ of certiorari should be denied.

Respectfully submitted,

ARTHUR I. NEUSTADT*
CHARLES L. GHOLZ
ROBERT T. POUS
OBLON, SPIVAK, McCLELLAND
MAIER & NEUSTADT, P.C.
1755 Jefferson Davis Highway
Arlington, Virginia 22202
(703) 413-3000

JAMES B. LAMPERT
HALE AND DORR
60 State Street
Boston, Massachusetts 02109
(617) 526-6000

*Counsel of Record *Counsel for Respondents*

Supreme Court, U.S.
FILED
MAY 21 2001
CLERK

No. 00-1543

IN THE

Supreme Court of the United States

OCTOBER TERM, 2000

FESTO CORPORATION,

Petitioner,

v.

SHOKETSU KINZOKU KOGYO KABUSHIKI CO., LTD., A/K/A SMC CORPORATION AND SMC PNEUMATICS, INC.,

Respondents.

Petition for Writ of Certiorari to the United States Court of Appeals for the Federal Circuit

REPLY TO BRIEF IN OPPOSITION

CHARLES R. HOFFMANN
HOFFMANN & BARON, LLP
6900 Jericho Turnpike
Syosset, New York 11791
(516) 822-3550

ROBERT H. BORK
Counsel of Record
Suite 1000
1150 17th Street, N.W.
Washington, D.C. 20036
(202) 862-5851

Counsel for Petitioner Festo Corporation

May 21, 2001

14 pp

PARTIES TO THE PROCEEDING

Pursuant to S. Ct. Rule 29.6, Petitioner, Festo Corporation states that its parent corporation is Festo AG.

There are no subsidiaries or affiliates of Festo Corporation that have issued shares to the public.

TABLE OF AUTHORITIES

Cases

Biovail Corp. Int'l v. Andrx Pharm., Inc.,
239 F.3d 1297 (Fed. Cir. 2001) 4

Control Resources, Inc., v. Delta Elecs., Inc.,
133 F. Supp. 2d 121 (D. Mass. 2001) 5

Exhibit Supply Co. v. Ace Patents Corp.,
315 U.S. 126 (1942) 8

Forest Labs., Inc. v. Abbott Labs.,
239 F.3d 1305 (Fed. Cir. 2001) 3

Graver Tank & Mfg. Co. v. Linde Air Prods. Co.,
339 U.S. 605 (1950) 3, 6

Insituform Techs., Inc. v. Cat Contracting Inc.,
58 U.S.P.Q.2d (BNA) 1392 (Fed. Cir. 2001) 4

Litton Sys., Inc. v. Honeywell Inc.,
238 F.3d 1376 (Fed. Cir. 2001) 4

Lockheed Martin Corp. v. Space Sys./Loral, Inc.,
___ F.3d ___, 2001 WL 436028
(Fed. Cir. Apr. 30, 2001) 4, 6

Pickholtz v. Rainbow Techs., Inc.,
125 F. Supp. 2d 1156 (N.D. Cal. 2000) 3

Smith v. Magic City Kennel Club, Inc.,
282 U.S. 784 (1931) 8

Warner-Jenkinson Co. v. Hilton-Davis Chem. Co.,
520 U.S. 17 (1997) ..... *passim*

Statutes & Constitutional Provisions

35 U.S.C. §112 1

U.S. CONST. Art. I, §8, cl. 8 1

Miscellaneous

Brief for United States as *Amicus Curiae*, 1996 WL 172221 (U.S. Apr. 11, 1996) 3

Manual of Patent Examining Procedure §714.04 (Rev. 1 Feb. 2000) 9

The Federal Circuit's sharply divided *en banc* opinion has profoundly altered the patent system in a way that both severely damages the value of all future innovation and retroactively destroys the settled expectations of existing patentees. More than twenty-five *amici*, representing corporations, small entrepreneurs, universities and research institutions, and practitioners of the patent bar in the United States and abroad, agree. *Festo* is consistent neither with Congress' purpose in promulgating the patent laws pursuant to the Constitutional mandate to "promote the Progress of Science and useful Arts," U.S. CONST. Art. I, §8, cl. 8, nor with this Court's prior decisions.

In response, respondent asserts that (i) the Federal Circuit's holding is limited and modest because it applies only to "narrowing" amendments; (ii) this Court should defer to the Federal Circuit's "expertise" in deciding what principles are "sensible and workable"; and (iii) this case—though meriting *en banc* review below—provides a poor vehicle for this Court's evaluation. None of these points has merit.

I.

A. The Federal Circuit's revolutionary *en banc* decision is already having a far-reaching impact on the patent system. Respondent seeks to avoid the sweep of the decision by arguing that *Festo* applies only to narrowing amendments, and that equivalents are barred only for those amended elements. This is wrong. The great majority of patent applications are amended in ways the Federal Circuit now characterizes as "narrowing."

The patent statute requires that an applicant submit claims "particularly pointing out and distinctly claiming the subject matter which [he] regards as his invention." 35 U.S.C. §112. Crafting claim language to fit the mental concept that is the invention, as Judge Linn pointed out, is inherently difficult and inexact. Patent claims, therefore, are more often than not amended to clarify the scope of the invention—sometimes voluntarily and sometimes in response to an objection from the patent examiner. (*See* App. 116a-117a). Hence, as Judge

Newman pointed out, the number of patent claims that escape amendment in the Patent Office is "vanishingly small." (App. 148a).

As many of the *amici* describe, the process of clarifying the claim has been typically handled in a non-adversarial process of negotiation between applicant and examiner. As a result of the *Festo* decision, however, patent applicants are no longer willing to agree to clarifying amendments suggested by the patent examiner for fear that such amendments will be construed literally as "narrowing." The relationship between applicant and examiner has become more adversarial, the number and back log of administrative appeals within the Patent Office will increase, and patent pendencies will drag out, significantly reducing the value of the patent because its life begins when the application is filed. In some cases the technology will become obsolete before the patent issues.[1] Smaller firms, and our nation's academic institutions—which combined account for a disproportionate share of innovation—suffer most under this regime.[2]

Respondent is wrong to say that clarifying amendments will not ordinarily be "narrowing." Amendments that clarify language or provide a more precise definition of a claim element almost always narrow the literal scope of the claim.

---

[1] *See, e.g.*, Brief of *Amicus Curiae* Chamber of Commerce of the United States in Support of the Petition at 10-11; Brief of *Amicus Curiae* Minnesota Mining and Manufacturing Co. ("3M") in Support of Petition for Writ of *Certiorari* at 15-17. 3M was joined on the brief by nine other major corporations including Sun Microsystems, Dow Chemical, Johnson & Johnson, Pfizer and PPG Industries.

[2] *See* Brief of *Amicus Curiae* Intellectual Property Creators in Support of Festo's Petition for Writ of *Certiorari* at 13-17; Brief of *Amicus Curiae* Massachusetts Institute of Technology et. al. in Support of Petition for Writ of *Certioriari*. ("MIT Brief") at 9-15,17-18. MIT was joined by five other institutions including affiliates of the University of Wisconsin, the University of Texas, and the State University of New York.

An amendment which corrects an informality relating to the statutory requirement of distinct and particular claiming is made for "reasons related for patentability" as now defined by the Federal Circuit, and will create a complete bar to the doctrine of equivalents even though the applicant had no intention to surrender or abandon any part of his claim. *See, e.g., Pickholtz v. Rainbow Techs., Inc.*, 125 F. Supp. 2d 1156, 1162-63 (N.D. Cal. 2000) (statement that amendment was intended to "clarify" the claim constituted admission that it was related to patentability under 35 U.S.C. §112, and thus invoked complete bar under *Festo*, even though the applicant "subjectively believed that the original claim was identical to the amended claim.").

B. Respondent further attempts to discount the impact of *Festo* with the argument that only those elements narrowed by amendment are restricted to their literal meaning. This, too, is wrong. Patent infringement requires that each and every claim element be found in the accused device. *Forest Labs., Inc. v. Abbott Labs.*, 239 F.3d 1305, 1310 (Fed. Cir. 2001). It follows that to avoid patent infringement, an imitator need only avoid one single claim element. As the dissenters and the *amici* point out, the imitator can now easily follow the prosecution history road map and make a trivial variation in an element that was amended during prosecution. (App. 74a, 126a). Such "unimportant and insubstantial changes and substitutions" were exactly what this Court intended the doctrine of equivalents to prevent. *Graver Tank & Mfg. Co. v. Linde Air Prods. Co.*, 339 U.S. 605, 607 (1950).

C. The impact of *Festo* is especially severe due to its retroactive effect. The 1.2 million patents now in force were prosecuted under the expectation that clarifying amendments—even those that literally "narrowed" the scope of the claims—would not result in the surrender of equivalents. *See* Brief for United States as *Amicus Curiae*, 1996 WL 172221, at *22-23 (U.S. Apr. 11, 1996), filed in *Warner-Jenkinson Co. v. Hilton-Davis Chem. Co.*, 520 U.S. 17 (1997).

The holders of those patents are now rendered defenseless against imitators who have made insignificant changes to amended claim elements. *See, e.g., Lockheed Martin Corp. v. Space Sys./Loral, Inc.*, ___ F.3d ___, 2001 WL 436028, at *10-11 (Fed. Cir. Apr. 30, 2001) (applying complete bar to patent that issued in 1978); *Biovail Corp. Int'l v. Andrx Pharm., Inc.*, 239 F.3d 1297, 1303-04 (Fed. Cir. 2001) (applying complete bar to patent that issued in 1996); *Litton Sys., Inc. v. Honeywell Inc.*, 238 F.3d 1376, 1379-80 (Fed. Cir. 2001) (applying complete bar to patent that was reissued in 1979). Indeed, the Federal Circuit has gone so far as to reopen and reverse settled findings of infringement in still pending cases to ensure that *Festo* is given "full retroactive effect." *Insituform Techs., Inc. v. Cat Contracting Inc.*, 58 U.S.P.Q.2d (BNA) 1392, 1396 (Fed. Cir. 2001).

This result was surely not contemplated by *Warner-Jenkinson*, where this Court—taking heed of the views of the Solicitor General and the Patent Office—expressed reluctance to "change so substantially the rules of the game now" and thereby "subvert the various balances the PTO sought to strike when issuing the numerous patents which have not yet expired and which would be affected by our decision." 520 U.S. at 32 n.6.

II.

Respondent urges this Court to defer to the Federal Circuit's "expertise" in patent matters and to allow further "doctrinal evolution" in that court on the question of the scope of prosecution history estoppel. This argument suffers from at least four fatal flaws:

A. The Federal Circuit's expertise consists of the conclusion that *Warner-Jenkinson's* flexible bar approach is "unworkable." That conclusion rests upon a single hypothetical. We are instructed to consider "a claim that originally recited a value less than twenty that was amended to recite a value less than five in light of a rejection over prior art

disclosing a value of fifteen. What subject matter was abandoned under the flexible approach? Is the patentee limited to values that are closer to five than fifteen, or can he reach any value less than fifteen?" (App. 28a-29a). It is impossible, the *en banc* majority says, for the patentee or the public to determine the precise range of equivalents available under the flexible bar approach. To the contrary, the situation creates no ambiguity and is easily decided. Under *Warner-Jenkinson*, the patentee must prove an acceptable reason for the amendment. If so, the court can consider that reason, along with the evidence of equivalence, to decide whether or not infringement lies under the doctrine of equivalents. If not, the patentee is defeated by the *Warner-Jenkinson* presumption of estoppel.

What constitutes a fair range of equivalents in a particular patent case is a determination that the courts have been making for more than 150 years, including the nearly 20 years the Federal Circuit has been in existence. Courts have long understood that, as in many areas of the law, the particular facts and circumstances of each case must be weighed in their proper context. Until *Festo*, courts had not found this issue to be unworkable. To the contrary, it is no different from the many other areas of the law in which judges must apply law to fact.[3] *Warner-Jenkinson*'s rebuttable presumption of estoppel where

---

[3] Under the Federal Circuit's reasoning, any "common law-type" doctrine would be deemed "unworkable." For example, prior to a final decision by a court, how can one determine with certainty whether a particular act will be deemed to be negligent? or an attempt to monopolize a given market? or whether a particular statement will be deemed slanderous? The answers to these questions are just as "virtually unascertainable" *a priori* as is the question of whether something is an equivalent under the patent law. Yet parties and courts tolerate this uncertainty in recognition of the fact that these areas of the law attempt to achieve a balance between competing interests. So it is in patent law. *See Control Resources, Inc., v. Delta Elecs., Inc.*, 133 F. Supp. 2d 121,123-125 (D. Mass. 2001) (criticizing the Federal Circuit in *Festo* for usurping the common law function of the district courts).

the reason for an amendment is unknown has made the judge's task easier. *Warner-Jenkinson*'s flexible bar is eminently workable.

B. *Festo* leaves no room left for "doctrinal evolution." The Federal Circuit has flatly stated that "our decision in *Festo* comprehensively and explicitly rejects . . . a 'flexible bar' approach." *Lockheed Martin*, __ F.3d at ___, 2001 WL 436028, at *11. The Federal Circuit has fully ventilated the issue of flexible bar vs. complete bar in its *en banc* decision. The cases cited *supra* demonstrate that the complete bar rule is now being applied. The broad edicts announced by the Federal Circuit have been understood to be final and to apply broadly. No other approach can develop because no other court of appeals has jurisdiction over patent cases. Respondent's call for patience to permit further percolation is futile.

C. Respondent's reliance upon the Federal Circuit's "common law" role is wholly misplaced. *Warner-Jenkinson* did not permit the Federal Circuit to re-decide the question this Court decided. That is well outside any acceptable common law process. This Court has already rejected a "bright[] line" rule that holds, *as a matter of law*, that equivalents are completely barred for amended claim elements. 520 U.S. at 32. That kind of rule would have "upset the basic assumptions" underlying prosecution of patents in the Patent Office, with profound effect on the 1.2 million patents now in force. This Court found no substantial justification for doing so. *Id.*

What this Court left to the Federal Circuit to refine—"in the orderly course of case-by-case determinations" based on "that court's sound judgment in this area of its special expertise"—was an entirely different question: What constitutes an "equivalent" of a claim element based on the "particular facts" in any given case? *Id.* at 40. That is a question involving an application of law to facts that is indeed within the Federal Circuit's expertise. *See Graver Tank*, 339 U.S. at 609 ("What constitutes equivalency must be determined

against the context of the patent, the prior art, and the particular circumstances of the case. Equivalence, in the patent law, is not the prisoner of a formula and is not an absolute to be considered in a vacuum.").

Moreover, the Federal Circuit's policy choice is flawed, in both substance and procedure. During the century and a half in which courts have applied the doctrine of equivalents, and the countervailing doctrine of prosecution history estoppel, neither Congress nor this Court has sought to alter the finely crafted balance struck between the incentives provided by patents to develop new technology and the right of "the public"—that is, competitors of the patentee—to make insubstantial modifications to the technology for use in follow-on products. The Federal Circuit attempts to impart certainty by imposing its absolute bar to equivalents. This comes at too high a price. As the *amici* point out, the *Festo* decision will have a chilling effect on investment in innovation, with detrimental effect on the public good.[4] If the balance is to be altered, that choice should be made by the legislature, fully informed after exercising its fact-finding authority and after full debate; not by an inferior court.

D. As demonstrated in the Petition, the *Festo* decision flatly contradicts *Warner-Jenkinson*. The reasons include: (i) *Festo* imposes a rigid, *per se* bar whereas *Warner-Jenkinson* rejected such a rigid bar; (ii) *Festo* eliminates the possibility of rebutting the presumption that *Warner-Jenkinson* intended to be rebuttable; (iii) *Festo* applies retroactively to patents already in force whereas *Warner-Jenkinson* intended that its new presumption not be applied in a way contrary to settled

---

[4] *See, e.g.*, MIT Brief at 9-15 (noting the hundreds of billions of dollars invested in basic research, much of it public money); Brief of *Amici Curiae* Chiron Corp., Guilford Pharmaceuticals, Inc. and XOMA in Support of Petition for Writ of *Certiorari* at 7-12 (noting billions of dollars in investments made in the biotechnology industry and the "special importance" of patents in protecting those investments).

expectations; and (iv) *Festo* addresses perceived overbreadth in the application of the doctrine of equivalents through application of prosecution history estoppel as a complete bar whereas *Warner-Jenkinson* intended that such overbreadth be addressed through the All Elements Rule. (*See* Pet. at 13-24).

Respondent argues that the Federal Circuit's decision to impose an absolute bar can be reconciled with the decisions of this Court, but that is incorrect. Respondent relies on the portion of *Warner-Jenkinson* in which the Court imposed a complete bar to equivalents for unexplained amendments. If a complete bar applies where the reason for the amendment is unknown, respondent argues, logic dictates that it should apply equally where the reason is shown to be related to patentability.

But that is false logic. Had this result been intended in *Warner-Jenkinson* there would have been no reason to erect a rebuttable presumption of estoppel at all, and no reason to remand on the facts of that particular case. Given the Federal Circuit's all-encompassing definition of what amendments "relate to patentability," no conceivable situation now exists in which the presumption can be rebutted. The correct reading of this part of the opinion is that this Court understood that when the reason for amendment is known, a court is then better able to determine what scope of equivalents should fairly be granted to a patentee in the particular circumstances of a given case.

Respondent also claims that this Court's previous precedent supported a rigid rule of estoppel. If that were so, why did *Warner-Jenkinson* cite some of these same decisions in support of its rejection of the rigid rule? *See Warner-Jenkinson*, 520 U.S. at 30-31 & n.5.[5] As Judge Michel pointed out in his

[5] The Court described some of the same cases cited by respondent, *e.g.*, *Exhibit Supply Co. v. Ace Patents Corp.*, 315 U.S. 126 (1942) and *Smith v. Magic City Kennel Club, Inc.*, 282 U.S. 784 (1931), as cases where estoppel was applied to claims that were amended after they had been rejected by the Patent Office on the basis of prior art. Yet, those decisions did not support a rigid rule.

scholarly dissent, this Court's precedent cannot be read to impose a rigid rule of estoppel. (App. 74a-91a).

III.

Respondent argues that the Court should not review this case because it is a "poor vehicle" for resolution of the questions raised in the petition. In this case, respondent asserts the claims were amended to avoid prior art—a traditional basis for application of prosecution history estoppel. In point of fact, none of the amendments at issue in this case were made to avoid prior art.[6]

The *en banc* majority, seizing on the applicants' boilerplate statements that their amended claims distinguished the prior art, found that the amendments were made, in part, to avoid prior art. (App. 52a, 55a). The *en banc* majority apparently failed to realize that Patent Office rules require an applicant to explain, in virtually every amendment, why the claims in their present form distinguish the prior art then of record. *See Manual of Patent Examining Procedure* §714.04 (Rev. 1 Feb. 2000). Neither the district court nor the two three-judge panels of the Federal Circuit found that the amendments had anything to do with the prior art. The *en banc* majority's unsupported statement that prior art was the reason for the amendments cannot substitute for the missing finding of fact and does not make this case unsuitable for review. The petition, supported by the various *amici*, asks the Court to review two important questions of law underlying the doctrine of prosecution history

[6] At trial, respondent's counsel stated: "This is not really a prosecution history estoppel case." (App. 198a). Consistent with the findings of the district court, the Federal Circuit panel, in a decision authored by Judge Newman, carefully analyzed the prosecution history, and concluded that the amendments to the Stoll patent were made solely in response to rejections as to matters of form under 35 U.S.C. §112 and were intended to "clarif[y]" the nature of the patented device. (App. 185a). Similarly with respect to the Carroll patent, the panel held that the prosecution history was clear that neither Festo nor the examiner distinguished the prior art based on the relevant sealing ring limitation. (App. 175a).

estoppel. That makes this case an excellent vehicle for review of the Federal Circuit's new law.

CONCLUSION

Petitioner respectfully submits that, for the reasons stated, *certiorari* should be granted.

Respectfully submitted,

ROBERT H. BORK
1150 17th Street, N.W.
Washington, D.C. 20036
(202) 862-5851
Counsel of Record

CHARLES R. HOFFMANN
HOFFMANN & BARON
6900 Jericho Turnpike
Syosset, NY 11791
(516) 822-3550

(3)

No. 00-1543

Supreme Court, U.S.
FILED
APR 27 2001
CLERK

IN THE
SUPREME COURT OF THE UNITED STATES

FESTO CORPORATION,
PETITIONER,

—V.—

SHOKETSU KINZOKU KOGYO KABUSHIKI CO., LTD.,
A/K/A SMC CORPORATION AND SMC PNEUMATICS, INC.,
RESPONDENTS.

On Petition For Writ Of *Certiorari* To The United States Court Of Appeals For The Federal Circuit

BRIEF OF *AMICUS CURIAE* ASSOCIATION OF PATENT LAW FIRMS IN SUPPORT OF PETITIONER

Scott H. Blackman
Counsel of Record
James T. Carmichael
LYON & LYON L.L.P.
1701 Pennsylvania Avenue
Suite 1040
Washington, D.C. 20005
(202) 331-3600

Counsel for Amicus Curiae,
Association of Patent Law Firms

April 27, 2001

5rp

STATEMENT OF INTEREST

The Association of Patent Law Firms ("APLF") is a national association of over 20 law firms that devote a majority of their practice to patent law. APLF member firms include attorneys who practice in the areas of patent prosecution, litigation, licensing, and counseling. APLF litigators typically represent plaintiffs in some lawsuits and defendants in others, unlike some areas of practice where distinct plaintiffs' and defendants' bars exist.[1]

INTRODUCTION

The APLF, which has never before filed a brief as *amicus* in any lawsuit, submits this brief as *amicus curiae* in support of a petition for a writ of *certiorari* to the United States Court of Appeals for the Federal Circuit, to review its *en banc* decision in *Festo Corp. v. Shoketsu Kinzoku Kogyo Kabushiki Co., Ltd.*, 234 F.3d 558 (Fed. Cir. 2000) ("*Festo*").[2]

The Federal Circuit's decision in *Festo* upsets long-settled property expectations in as many as one million or more U.S. patents. Those expectations were based on a long line of cases including this Court's landmark decision in *Graver Tank & Mfg. Co. v. Linde Air Prods. Co.*, 339 U.S. 605 (1950), approving the doctrine of equivalents.

---

[1] Pursuant to Rule 37.6, none of the parties or their counsel has contributed substantively or monetarily to the preparation of this brief. Specifically, only the amicus, its members, and its counsel have made a monetary contribution to the preparation or submission of this brief.

[2] Consent letters from the attorneys for Petitioner and Respondent are being filed concurrently with this Brief.

This Court should resolve now the upheaval created by the *Festo* decision, because it has a tremendous, fundamental impact on (1) the substantial rights and value expectations in existing patents and applications; and (2) the public interest in providing both notice and protection of patent rights.

ARGUMENT

The Federal Circuit's decision in *Festo* greatly impacts the fundamental scope of patent rights afforded to a patent owner. A deeply divided Federal Circuit reversed its own precedent and adopted a *per se* rule eliminating all flexibility in applying the doctrine of equivalents to claim limitations that had been amended for a patentability reason.

Before *Festo*, the Federal Circuit consistently applied a flexible rule, *i.e.*, a true estoppel, preventing a patent owner from taking an inconsistent position and reclaiming what was specifically given up during prosecution. This sudden about-face by the Federal Circuit extends the law beyond this Court's ruling in *Warner-Jenkinson Company, Inc. v. Hilton Davis Chemical Co.*, 520 U.S. 17 (1997).

If the law is to change in this direction, so be it. We do not mean to suggest that the result necessarily is wrong. However, because of the unusual and abrupt nature of the Federal Circuit's course and its departure from the strictures of *stare decisis*, there is at least a substantial chance that this Court may, now or later, overturn the Federal Circuit decision.

In the meantime, any party concerned about rights in a patent is faced with significant uncertainty in view of the overt possibility that *Festo* might be overturned. This

uncertainty will not quickly abate unless and until this Court considers the issues raised in *Festo*.

The vast majority of extant patents were issued after at least one amendment to at least one claim, for patentability issues. Such amendments have always been expected, and even planned for, during prosecution. Thus, most patent owners and applicants suddenly are faced with a substantial retroactive loss of value in their intellectual property.

Moreover, the uncertainty created by the *Festo* decision will have a chilling effect on competitive commercial activities. The public -- which gives up a limited-term monopoly in exchange for full disclosure by the patent applicant -- cannot now confidently rely on the scope of protection to be afforded to patent claims. Thus, the *Festo* decision will adversely affect innovation and the general public unless and until this Court resolves the uncertainty.

Patent applicants and others may be able to deal with the pending uncertainty by taking measures to protect their rights under either scenario, *i.e.*, whether or not *Festo* ultimately is overruled. However, while large companies may be able to afford the extra time and expense to thoroughly protect their interests either way, others may not have that luxury, instead needing to cut corners and take their chances.

CONCLUSION

The Federal Circuit's sweeping decision in *Festo* creates uncertainty throughout the economy, because the abrupt reversal of established precedent ultimately may or may not be upheld. This uncertainty undermines the important public interests balanced by a strong, reliable, affordable and predictable patent system. For these reasons,

the APLF respectfully requests that the Court issue a writ of *certiorari* to the United States Court of Appeals for the Federal Circuit in this case, and clarify -- one way or the other -- this very important area of patent law.

Respectfully submitted,

Amicus Curiae
Association of Patent Law Firms

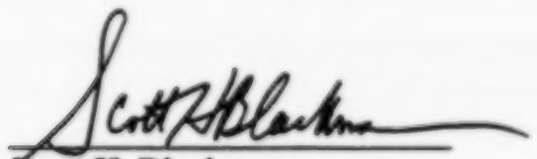

Scott H. Blackman
Counsel of Record
James T. Carmichael
LYON & LYON LLP
1701 Pennsylvania Avenue, Suite 1040
Washington, D.C. 20005
(202) 331-3600

(5)

No. 00-1543

Supreme Court, U.S.
FILED
MAY 8 2001
OFFICE OF THE CLERK

IN THE

Supreme Court of the United States

FESTO CORPORATION,

Petitioner,

—v.—

SHOKETSU KINZOKU KOGYO KABUSHIKI CO., LTD.,
a/k/a SMC CORPORATION AND SMC PNEUMATICS, INC.,

Respondents.

ON PETITION FOR A WRIT OF CERTIORARI TO THE UNITED STATES COURT OF APPEALS FOR THE FEDERAL CIRCUIT

BRIEF OF AMICUS CURIAE FÉDÉRATION INTERNATIONALE DES CONSEILS EN PROPRIÉTÉ INDUSTRIELLE IN SUPPORT OF PETITION FOR WRIT OF CERTIORARI

R. DANNY HUNTINGTON
RAYMOND C. STEWART
JOHN P. SUTTON
TIPTON D. JENNINGS IV

Fédération Internationale Des Conseils En Propriété Industrielle

MAXIM H. WALDBAUM
Counsel of Record
LORI D. GREENDORFER
SALANS HERTZFELD HEILBRONN CHRISTY & VIENER
620 Fifth Avenue
New York, New York 10020
(212) 632-5500

Counsel for Amicus Fédération Internationale Des Conseils En Propriété Industrielle

May 9, 2001

54P

QUESTIONS PRESENTED

1. Whether the Federal Circuit in *Festo Corporation v. Shoketsu Kinzoku Kogyo Kabushiki Co., LTD., a/k/a SMC Corporation, and SMC Pneumatics, Inc.*, 234 F.3d 558, 574 (Fed. Cir. 2000) (hereinafter, "*Festo*"), acted contrary to the long-standing and settled precedent of this Court and the teachings of prior Federal Circuit decisions, contrary to public policy, and beyond its authority, by holding that prosecution history estoppel imposes a complete bar on the doctrine of equivalents in a lawsuit for patent infringement whenever an amendment to a patent claim has narrowed the scope of such claim for a reason "related to 'patentability'" (as such term is broadly defined by the *Festo* court) (hereinafter referred to as "the Complete Bar Rule")?

2. Whether the impact of the Complete Bar Rule on a patentee's intellectual property rights, the United States Patent and Trademark Office, the obligations of the U.S. under international treaties, and technological innovation on a national and global scale, requires a review and reversal of *Festo* and a return to the Supreme Court's holding, in *Warner-Jenkinson Company, Inc. v. Hilton-Davis Chemical Co.*, 520 U.S. 17 (1997), that there is a flexible bar to the doctrine of equivalents even where a patent claim is narrowed in scope during prosecution of the patent?

TABLE OF CONTENTS

Page

Interest Of The Amicus Curiae 1

Summary Of The Argument..... 3

Argument 4

A. Background 4

B. *Certiorari* Should Be Granted Because The Complete Bar Rule Is Contrary To This Court's Precedent And An Unprincipled Departure From Federal Circuit Law..... 9

C. *Certiorari* Should Be Granted Because *Festo* Creates An Armageddon For Patent Values.....11

D. *Certiorari* Should Be Granted Because The *Festo* Rule Will Harm Innovation And Intellectual Property Protection.....15

Conclusion 20

TABLE OF AUTHORITIES

CASES

Autogiro Co. of Am. v. United States,
384 F.2d 391 (Ct. Cl. 1967).....5, 12

Banff, Ltd. v. Federated Dep't Stores, Inc.,
841 F.2d 486 (2d Cir. 1988) 13

Black & Decker, Inc. v. Hoover Serv. Ctr.,
886 F.2d 1285 (Fed. Cir. 1989),
abrogated by Festo Corp. v. Shoketsu Kinzoku Kogyo Kabushiki Co.,
234 F.3d 558 (Fed. Cir. 2000) 7, 8

Festo Corp. v. Shoketsu Kinzoku Kogyo Kabushiki Co.,
234 F.3d 558 (Fed. Cir. 2000) .....*passim*

Graver Tank & Mfg. Co. v. Linde Air Prods. Co.,
339 U.S. 605 (1950).....*passim*

Hilton Davis Chem. Co. v. Warner-Jenkinson Co.,
62 F.3d 1512 (Fed. Cir. 1995), *rev'd on other grounds*,
520 U.S. 17 (1997).....17

Hoechst Celanese Corp. v. BP Chems. Ltd.,
78 F.3d 1575, 1578-81 (Fed. Cir. 1996).....12

Hughes Aircraft Co. v. United States, 717 F.2d 1351
(Fed. Cir. 1983), *overruled by Festo Corp. v. Shoketsu Kinzoku Kogyo Kabushiki Co.*,
234 F.3d 558 (Fed. Cir. 2000) 5, 6, 9, 10

Kinzenbaw v. Deere & Co.
741 F.2d 383 (Fed. Cir. 1984) 9, 10
Prodyne Enters., Inc. v. Julie Pomerantz, Inc.
743 F.2d 1581 (Fed. Cir. 1984) 10
Warner-Jenkinson Co. v.
Hilton-Davis Chem. Co.,
520 U.S. 17 (1997).....*passim*
Wilson Sporting Goods Co. v. David Geoffrey & Assocs., 904 F.2d 677 (Fed. Cir. 1990) 5

STATUTES, RULES AND CONSTITUTIONAL PROVISIONS

35 U.S.C. § 101.....4
35 U.S.C. § 102.....4, 5
35 U.S.C. § 103.....4
35 U.S.C. § 112.....4
35 U.S.C. § 154.....4
35 U.S.C. § 271.....4
35 U.S.C. § 281.....4
U.S. Const., art. I, § 8, cl. 8 4
Sup. Ct. Rule 37.....1

MISCELLANEOUS

66 Fed. Reg. 53 (Mar. 19, 2001).....19
Act Revising the Convention on the Grant of European Patents Nov. 29, 2000,
Protocols Art. 2.....18
Agreement on Trade-Related Aspects of Intellectual Property Rights,
April 15, 1994, 33 I.L.M. 81 .....*passim*
Brief for the United States as
Amicus Curiae,
1996 WL 172221 (U.S. Apr. 11, 1996) 17, 18
David Bannerman & Chris Hamer, "*Different Approaches to the "Doctrine of Equivalents" in Germany, UK, US and Japan*"
AIPPI Journal 82 (Mar. 2000) 17, 18
European Patent Convention Art. 69,
Oct. 5, 1973. 18
About WIPO, at http://www.wipo.org./about-wipo/en/.html. 2

INTEREST OF THE AMICUS CURIAE

Fédération Internationale Des Conseils En Propriété Industrielle ("FICPI") respectfully submits this brief, as amicus curiae, in support of the petition for a writ of certiorari in this case.[1] FICPI supports review and reversal of that portion of the decision in *Festo Corp. v. Shoketsu Kinzoku Kogyo Kabushiki Co.*, 234 F.3d 558, 574 (Fed. Cir. 2000) (hereinafter, "*Festo*"), which held that prosecution history estoppel imposes a complete bar on the doctrine of equivalents in a patent infringement lawsuit whenever a claim amendment has narrowed the scope of such claim for a "reason related to patentability" (hereinafter referred to as "the Complete Bar Rule"). FICPI otherwise takes no position on the merits of the case.

FICPI, established in 1906, is a Switzerland-based international and non-political association of approximately 4,000 intellectual property attorneys from over seventy countries (including the U.S.). FICPI's members represent individual inventors as well as large, medium and small companies. One of the members' major roles is to advise inventors in intellectual property matters and secure protection for industrial innovation. FICPI supports the uniform global protection of patents, and the interests of

---

[1]FICPI has received letters of consent from counsel of record for all parties pursuant to Sup. Ct. R. 37.3, as submitted herewith. FICPI states, pursuant to Sup. Ct. R. 37.6, that counsel for the parties did not author any portion of this brief, and that FICPI received no "monetary contribution to the preparation or submission of the brief" from any person or entity, other than FICPI. The contents of this brief solely represent the views of FICPI and not any of its individual members.

inventors and the United States Patent and Trademark Office ("the PTO") in a fair scope of patent protection.

FICPI is one of only two major world organizations that advise the World Intellectual Property Organization ("WIPO"), an intergovernmental organization, on all intellectual property matters. In this capacity, it has attended Diplomatic Conferences concerning international intellectual property treaties and practices. WIPO is dedicated to promoting and protecting intellectual property rights worldwide. Its 177 member states (including the U.S.) comprise almost 90% of the world's countries. *See About WIPO*, at http://www.wipo.org./about-wipo/en/.html. As one of the United Nations' sixteen specialized agencies, WIPO administers intellectual property matters recognized by the U.N.'s member states and 21 international treaties concerning intellectual property. *See id.* The U.S. is a member of the WIPO Standing Committee on the Law of Patents ("SCP") and is involved with WIPO's efforts to harmonize substantive patent law worldwide.

FICPI's members rely on the doctrine of equivalents in drafting patent language, and in advising clients involved in patent infringement lawsuits and licensing transactions. Because many of its members are foreign practitioners, and because of its role as a WIPO advisor, FICPI has a unique perspective on the global impact of the Complete Bar Rule. First, the rule deters domestic and foreign inventors from publicly disclosing the attributes of their inventions, instead encouraging trade secret protection. Second, it devalues the majority of the 1.2 million unexpired U.S. patents, thus decreasing their licensing value to domestic and foreign residents. Third, the message conveyed by *Festo* is that the Federal Circuit can replace Congress' role, and reverse over a century of precedent with an unprincipled decision that dramatically impacts

patentees' vested rights on a global scale and has far-reaching negative legal and economic consequences to inventors worldwide. This message is inconsistent with the United States' status as a world leader in technology, and its commitment to the goal of global harmonization of patent laws. FICPI thus urges this Court to grant the petition for certiorari.

SUMMARY OF THE ARGUMENT

The American patent system is founded on encouraging the creation of, and investment in, innovative technology, which requires the participation and cooperation of foreign countries. A flexibly applied doctrine of equivalents ("the doctrine") is critical to that goal because it helps ensure that the essence of a patented invention is protected from copyists, and protects the value of the patent in the U.S. and abroad, in part because major foreign countries adhere to similar equivalents doctrines. This Court, for over 150 years, and the Federal Circuit (prior to *Festo*), has adhered to a flexible bar. As discussed below, the *Festo* majority's dramatic shift to a complete bar conflicts with this Court's precedent and unjustifiably departs from settled Federal Circuit precedent.

Moreover, the U.S. is responsible to the international community for ensuring that "fair and equitable" enforcement procedures are available "to permit effective action against any act of infringement of intellectual property rights . . . including . . . remedies which constitute a deterrent to further infringements" under the Agreement on Trade-Related Aspects of Intellectual Property Rights, April 15, 1994, art. 41, ¶¶ 1 & 2, 33 I.L.M. 81 (hereinafter "TRIPS"). TRIPS applies to patents. *Id.* art. 27. As discussed below, the Complete Bar Rule is inconsistent with these

obligations, as well as the United States' efforts to attain uniform global patent laws.

ARGUMENT

A. Background

The United States Constitution grants Congress the authority to confer upon patentees certain exclusive rights to their inventions in order to "promote the Progress of Science and useful Arts." U.S. Const. art. I, § 8, cl. 8. To obtain a patent, the inventor must prosecute his claimed invention before the PTO. The invention must satisfy the requirements of the Patent Act. *See, e.g.*, 35 U.S.C. §§ 101-03, 112. Documents concerning exchanges between the Patent Examiner ("the Examiner") and the applicant concerning, *inter alia*, the permissible scope of the claims, as well as any amendments made in response to an Examiner's rejection, are contained in a record called the "prosecution history." In this adversarial process, the patentee attempts to receive the broadest claims possible and the Examiner attempts to limit the scope of protection in accordance with the Patent Act. If granted, the patent gives the patentee the right to exclude others in the U.S. from, *inter alia*, making, using, or selling the patented invention (collectively, the "right to exclude") for twenty years from the date the application was filed. *See id.* §§ 154, 271.

A patentee can enforce his right to exclude in a civil action for infringement. *See id.* § 281. A literal infringement claim, however, does not always cover the scenario where the accused product or process appropriates the essence of the patented invention but nevertheless contains an insubstantial change from the invention. *Festo*, 234 F.3d at 615 (Michel, J., dissenting) (citing *Graver Tank & Mfg. Co. v. Linde Air Prods. Co.*, 339 U.S. 605, 608 (1950)) ("*Graver Tank*").

Since 1853, the "doctrine of equivalents" has modified this harsh result of a literal approach. *Id.* (citing *Winans v. Denmead*, 56 U.S. (15 How.) 330 (1853)). The doctrine finds infringement where the accused product or process "'performs substantially the same function in substantially the same way to obtain the same result'" as the claimed invention. *Graver Tank*, 339 U.S. at 608 (quoting *Sanitary Refrigerator Co. v. Winters*, 280 U.S. 30, 42 (1929)). This doctrine was refined by the "all elements rule" in *Warner-Jenkinson Co. v. Hilton-Davis Chem. Co.*, 520 U.S. 17, 29-30 (1997). *See* Petition for Writ of Certiorari of Festo Corporation (U.S. Apr. 9, 2001) ("Pet. Mem.") at 19-21.

The doctrine does not broaden the scope of patent claims. *Wilson Sporting Goods Co. v. David Geoffrey & Assocs.*, 904 F.2d 677, 684 (Fed. Cir. 1990) ("the scope of patent protection *as defined by* the claims – remain the same and application of the doctrine *expands the right to* ***exclude*** to 'equivalents' of what is claimed") (emphasis in original). The doctrine recognizes that a literal claim analysis unfairly prioritizes "literary skill" over "creativity" because the patentee must rely on words to describe concepts typically best described pictorially. *Autogiro Co. of Am. v. United States*, 384 F.2d 391, 396-97, 399 (Ct. Cl. 1967) ("*Autogiro*"); *Festo*, 234 F.3d at 621-22 (Linn, J., dissenting).

The patent prosecution process requires and relies upon a flexible bar because "[a]mendment of claims is a common practice." *Hughes Aircraft Co. v. United States*, 717 F.2d 1351, 1363 (Fed. Cir. 1983) ("*Hughes*"), *overruled by Festo*, 234 F.3d at 574. For example, applicants seeking to patent new technology often cannot conduct all necessary prior art searches before the filing deadline (*see* 35 U.S.C. § 102), and thus frequently must amend. *Festo*, 234 F.3d at 622 (Linn, J., dissenting). Moreover, the expediency and

fairness of the process depends, as noted, on an "iterative" and adversarial exchange between Examiner and applicant, where the applicant agrees to amend claims in response to an Examiner's rejection in order to reach agreement on a set of claims. *Festo*, 234 F.3d at 618 (Michel, J., dissenting); *see also* Pet. Mem. at 25.

The doctrine is applied restrictively because of its limited purpose to prevent "fraud on a patent." *Graver Tank*, 339 U.S. at 608. The *Warner-Jenkinson* Court limited the doctrine in two ways, one of which is relevant here. There, the Court held that there is a rebuttable presumption that a claim amendment was made for a reason related to patentability where there is no reason set forth in the prosecution history ("the Silent Record Presumption"). 517 U.S. at 33-34. If the presumption is not rebutted by the patent owner, reliance on the doctrine is barred. *Id.* This presumption necessarily recognizes that amendments do not automatically trigger a complete bar to the doctrine of equivalents. *Id.* at 30-31. Rather, the court must inquire into the stated reasons for the amendment in determining the resulting range, if any, of equivalents. *Hughes*, 717 F.2d at 1363. Thus, the *Warner-Jenkinson* Court's refinement of the doctrine of equivalents "balance[d] the competing needs of granting meaningful protection to patentees and of notifying the public of the effective scope of a patentee's rights." *Festo*, 234 F.3d at 598 (Michel, J., dissenting).

The notice function of patent claims in certain ways enhances competition because it permits others to "design around" the claims. *Id.* at 577. However, it is equally if not more important to discourage "free riding" on a patentee's research and development of new technology through appropriation of the invention with a trivial change. *Id.* at 615-17 (Michel, J.,

dissenting). Indeed, as discussed *infra*, the doctrine serves this goal and encourages investment in technological innovation. Because 44% of United States patents were issued to foreign residents in 1999 (*see* Appendix, submitted herewith ("A-__") at 25), changing the *Warner-Jenkinson* Court's careful balancing of controls likely will directly and globally affects the patent's scope and value. Further, domestic and foreign licensees of U.S. patents also are affected by a retroactive law that devalues the patent. *Festo*, 234 F.3d at 619 (Michel, J., dissenting).

The *Festo* majority claimed to further refine the doctrine but instead effectively destroyed and/or abandoned it. In *Festo*, the majority held that "prosecution history estoppel acts as a complete bar to the application of the doctrine of equivalents when an amendment has narrowed the scope of a claim for a reason related to patentability." *Id.* at 574. "Patentability" is not defined, but apparently includes all narrowing amendments, converting the *Warner-Jenkinson* Court's "'limited set of reasons'" for an amendment to an "unconstrained estoppel," if *any* change is made, whether substantive or otherwise. *Id.* at 633-34 (Newman, J., dissenting) (quoting *Warner-Jenkinson*, 520 U.S. at 30). Concerning *Warner-Jenkinson* as precedent, the majority asserted, "the question of the scope of equivalents available when prosecution history estoppel applies to a claim element has not been directly addressed or answered by the Supreme Court ... where the claim was amended for a known patentability reason." *Id.* at 569.

The process of obtaining a patent, its reliance on claim language to define its scope and the settled reliance on the equitable doctrine of equivalents, reveal the magnitude of the *Festo* majority's decision to abolish the doctrine. Because almost every patent

application is amended, the Complete Bar Rule "read[s] the doctrine of equivalents out of the law." *Black & Decker, Inc. v. Hoover Serv. Ctr.*, 886 F.2d 1285, 1295 (Fed. Cir. 1989), *abrogated by Festo*, 234 F.3d at 574. The result of the *Festo* majority's decision is a patent system that becomes unworkable, permanently disabled and unjust, for several reasons. First, the Complete Bar Rule encourages the pirating of patented inventions through an insubstantial change to an element of an amended claim. *Festo*, 234 F.3d at 641 (Newman, J., dissenting) (explaining that *Festo* provides a "new recipe for risk-free copying"). Second, as noted, the rule significantly devalues an unexpired patent that was amended in reliance on the flexible bar.

Third, the rule will stifle technological innovation, counter to the goals of the Patent Act and the goal of a uniformly applied global patent system. *See* Discussion, *infra*, at 11-20. Fourth, the rule does not enhance certainty of claim interpretation because it will require patentees to draft claims with additional language, and to add claims in order to compensate for the loss of equivalents, with the added result of inordinately costly and "protracted prosecution." *Festo*, 234 F.3d at 624 (Linn, J., dissenting). Fifth, if a patentee engages in the adversarial prosecution process (rather than the more time consuming and costly appellate procedure (*see id.* at 618 (Michel, J., dissenting)), he likely will amend, and probably will be unable to argue that his amendment was not made for a "patentability" reason, given its broad definition in *Festo*. Thus, the patentee loses equivalents simply by engaging in the standard prosecution process. This result is inconsistent, *inter alia*, with the U.S. obligation under TRIPS to provide a "fair and equitable" patent prosecution system. *See* TRIPS, art. 62, ¶ 4 & art. 41, ¶ 2.

B. *Certiorari* Should Be Granted Because The Complete Bar Rule Is Contrary To This Court's Precedent And An Unprincipled Departure From Federal Circuit Law

Prior to *Festo*: (1) this Court expressly declined to adopt a Complete Bar Rule; (2) courts applied the doctrine on a case by case basis and with a flexible range of equivalents; and (3) courts were required to determine, with respect to narrowed claims, "what was surrendered and why, measured by the representations made by the applicant in order to obtain the patent." *Festo*, 234 F.3d at 631-32 (Newman, J., dissenting).

The *Warner-Jenkinson* Court "endorsed" the approach of over 150 years of Supreme Court precedent which recognized a flexible bar and preserved the balancing of controls. *Id.* at 608-09 (Michel, J., dissenting); *Warner-Jenkinson*, 520 U.S. at 30-32; *see also* Pet. Mem. at 19-20, 22-23. Thus, contrary to *Festo*, the potential for a complete bar rule was addressed and rejected by the *Warner-Jenkinson* Court. Pet. Mem. at 5-6, 14-15. In rejecting such a rule, the Court also considered the PTO's reliance on a flexible bar in requesting amendments: "[t]o change so substantially the rules of the game now could very well subvert the various balances the PTO sought to strike when issuing the numerous patents which have not yet expired." *Warner-Jenkinson*, 520 U.S. at 32 n. 6.

Further, the Complete Bar Rule is a dramatic shift from established Federal Circuit precedent from 1983-2000. *See Festo*, 234 F.3d at 609-15 (Michel, J., dissenting). In *Hughes*, for example, the court rejected a "wooden application of estoppel" and adhered to a flexible range of equivalents. *Hughes*, 717 F.2d at 1362. In *Kinzenbaw v. Deere & Co.*, 741 F.2d 383, 389 (Fed. Cir. 1984), which *Festo* interpreted as applying a

complete bar (*Festo*, 234 F.3d at 572-75), the court refused to speculate concerning the range of equivalents that would have resulted had the patentee not narrowed his claim to the extent he did. *Kinzenbaw*, 741 F.2d at 389. The *Kinzenbaw* court did, however, examine the "exact scope of surrender" consistent with a flexible approach. *Festo*, 234 F.3d at 610-11 (Michel, J., dissenting); *see also id.* (citing *Prodyne Enters., Inc. v. Julie Pomerantz, Inc.*, 743 F.2d 1581, 1583 (Fed. Cir. 1984), as following the *Kinzenbaw* court's strict approach to a flexible doctrine of equivalents).

Compared to *Hughes*, *Kinzenbaw* and *Prodyne Enterprises* represent a strict approach to a flexibly applied equivalence doctrine, necessary where a patentee takes aggressively unreasonable positions on claim interpretation. *See, e.g.*, *Kinzenbaw*, 741 F.2d at 389. However, "[i]t is inappropriate to convert the extremes of this continuum into 'conflicting lines,' and then to use this contrived conflict to justify changing the law to eliminate not only both lines but also everything in-between." *Festo*, 234 F.3d at 634 (Newman, J., dissenting). Thus, the *Festo* majority's shift from a flexible to a complete bar is unprecedented and "contrary to any notion that judge-made law should evolve in a consistent, gradual and predictable fashion." *Id.* at 610 (Michel, J., dissenting). Moreover, the *Festo* majority did not explain the error in any of the prior decisions applying a flexible bar. *Id.* at 612, 619.

The Complete Bar Rule is inconsistent with settled precedent on additional grounds. First, it moots the Silent Record Presumption. *Id.* at 625-26 (Linn, J., dissenting). Second, the *Festo* majority's broad definition of "patentability" further restricts access to equivalents, "exacerbat[ing] the conflict with . . . *Warner-Jenkinson*." *Id.* at 630 (Newman, J.,

dissenting). Third, the rule unjustly abandons the equitable foundation of the doctrine. *Id.* at 617 (Michel, J., dissenting) (citing *Hecht Co. v. Bowles*, 321 U.S. 321, 329-30 (1944), emphasizing: "[f]lexibility rather than rigidity has distinguished [equity jurisdiction]"). "Without this flexibility, courts are precluded from protecting patentees from copyists." *Id.*; *cf.* TRIPS, art. 41, ¶¶ 1-2 (requiring "fair and equitable" and "effective" patent "enforcement procedures"). In sum, the *Festo* majority's decision is unprincipled law which attacks the global value of a patent from all angles. *See Graver Tank*, 339 U.S. at 607 (warning that a literalistic approach "convert[s] the protection of the patent grant into a hollow and useless thing . . . [and] encourage[s] the unscrupulous copyist to make unimportant and insubstantial changes and substitutions in the patent which, though adding nothing, would be enough to take the copied matter . . . outside the reach of law").

C. *Certiorari* Should Be Granted Because *Festo* Creates An Armageddon For Patent Values

The Complete Bar Rule will have a direct and far-reaching impact on patentees, inventors, the PTO and the public, both in the United States and globally, because the majority of the approximately 1.2 million unexpired patents are subject to this rule. The main policy reasons the *Festo* majority offers for the Complete Bar Rule are that (1) it will enhance the "notice function"; and (2) the flexible bar rule is "'unworkable.'" *Festo*, 234 F.3d at 575-78.

Contrary to *Festo*, a flexible bar is consistent with the notice function. First, a competitor can discern the meaning and scope of amended claim language (including potential equivalents) by reviewing the

prosecution history. *Id.* at 626 (Linn, J., dissenting). Indeed, "the scope and meaning of claim limitations may be more easily discerned for amended limitations . . . based on the record developed during prosecution." *Id.* Second, competitors are protected by a reasonableness standard, *i.e.*, "whether persons reasonably skilled in the art would have known of the interchangeability of an ingredient not contained in the patent with one that was." *Graver Tank*, 339 U.S. at 608-09. Third, the Silent Record Presumption ensures that third parties are not burdened with determining the meaning of omissions from the prosecution history.

Fourth, the restriction to a literal analysis does not enhance the notice function sufficiently to justify abolishing this equitable doctrine, because even a literal analysis can result in varying interpretations and require consideration of the prosecution history. *See Autogiro*, 384 F.2d at 396 ("The very nature of words would make a clear and unambiguous claim a rare occurrence."); *Hoechst Celanese Corp. v. BP Chems. Ltd.*, 78 F.3d 1575, 1578-81 (Fed. Cir. 1996) (dispute concerning the meaning of "stable" in a patent claim). Fifth, this Court, for over a century, and the Federal Circuit, for nearly two decades, have found the "notice function" adequately served despite the flexible bar. *Id.* at 598-616, 619 (Michel, J., dissenting).

Similarly, the *Festo* majority erroneously concluded that the doctrine is "unworkable" because courts may differ on the extent of the subject matter found relinquished through amendment. *Id.* at 575. As noted, however, a literal approach also is vulnerable to varied interpretations of claim language. Further, there has been no call for bright-line rules in trademark or copyright law, or tort and securities laws, despite the potential for varied outcomes in those areas because of fact-based inquires and reasonableness standards. *See,*

e.g. Banff, Ltd. v. Federated Dep't Stores, Inc., 841 F.2d 486, 489-90 (2d Cir. 1988) (applying "ordinar[y] prudent purchaser[]" standard to determine likelihood of confusion in trademark case); *cf. Warner-Jenkinson*, 520 U.S. at 37 ("Much as the perspective of the hypothetical 'reasonable person' gives content to concepts such as 'negligent' behavior, the perspective of a skilled practitioner provides content to, and limits on, the concept of 'equivalence.'"). That businesses may need to structure their conduct and assess risks in light of a flexible bar is consistent with what the law imposes in these other areas.

Indeed, the distinction made by the *Festo* majority between amended and unamended claims is arbitrary and illogical: "The majority does not explain why a new bright line rule is compelled to strictly construe the inventor's choice of words in amendments but not similarly compelled for original claim limitations." *Festo*, 234 F.3d at 626 (Linn, J., dissenting). Thus, the complete bar should be viewed as an abuse of patent procedure proscribed by TRIPS. *See* TRIPS, art. 41, ¶ 1. Finally, it is well settled that a failure to support innovation with strong patent protection will negate the benefits from, and results of, scientific research, and is inconsistent with the Constitution's mandate to protect inventors from copyists (*see Festo*, 234 F.3d at 621; 640-41 (Linn, J.; Newman, J., dissenting)), and the international goal, supported by the U.S., of global protection and enforcement of patents.

The Complete Bar Rule also unjustly frustrates the expectations of inventors, patentees, the PTO and the public, on a global scale. During prosecution, applicants and Examiners typically rely on the availability of some range of equivalents even when claims are narrowed in response to rejections. *Id.* at 618 (Michel, J., dissenting); *Warner-Jenkinson*, 520

U.S. at 32 n.6. In light of *Festo*, however, even where the PTO requests only "minor or clarifying amendments," applicants likely will appeal an Examiner's rejection to the PTO Board of Patent Appeals (which already is overwhelmed with appeals) rather than lose equivalents through amendment. *Festo*, 234 F.3d at 618, 624 (Michel, J., Linn, J., dissenting). Thus, *Festo* will seriously disrupt the patent system. *Id.* at 618-19 (Michel, J., dissenting).

Further, the Complete Bar Rule lengthens the prosecution process because inventors will be forced to add claims, numerous equivalent terms, and any insubstantial variation of the claimed invention, to account for the loss of equivalents. *Id.* at 624 (Linn, J., dissenting); *cf.* TRIPS, art. 41, ¶¶1-2; art. 62, ¶¶1-2. The attorney's drafting skills will be prioritized over the attributes of the invention (with significant added prosecution costs). *Festo*, 234 F.3d at 624 (Linn, J., dissenting). These likely scenarios frustrate the goals of the Patent Act, which prioritizes the essence of the invention over its linguistic description. *See Graver Tank*, 339 U.S. at 607; A-1-8, 10-14, 16-21 (attaching excerpts of, and commentary concerning, the U.S. supported WIPO Draft Substantive Patent Law Treaty (the "SPLT") providing for an equivalents doctrine consistent with pre-*Festo* law). In contrast, the *Festo* majority did not consider the *Warner-Jenkinson* Court's careful balancing of controls, the equitable nature of the doctrine, or the impact of the rule given the United States' efforts to harmonize substantive patent laws and its role as a world leader in encouraging technological innovation, as discussed in the next section.

D. *Certiorari* Should Be Granted Because The *Festo* Rule Will Harm Innovation And Intellectual Property Protection

The *Festo* majority concluded, without any relevant basis or evidence, solely relying on its "experience," that the Complete Bar Rule will stimulate innovation, *i.e.*, the ability to design around the patent. *Festo*, 234 F.3d at 612 (Michel, J., dissenting). However, the court ignored the overriding consideration that the flexible bar is consistent with the more important goal of encouraging competitors to make "'leapfrogging' advances instead of simply copying at the edge of the claims." *Id.* at 640 (Newman, J., dissenting). It is well settled that "technological advance and industrial vigor flow from legal and economic policies that encourage invention and support investment in the products of invention." *Id.* at 639. Other studies indicate that a bright line rule negatively impacts industrial innovation. *Id.* at 639-41.

Generally, "long-term economic growth requires a policy framework that encourages the creation and commercialization of new technologies, as contrasted with a policy that facilitates appropriation of the creative product, lest the creative product dry up in the face of too-easy appropriation." *Id.* at 640 (explaining that such "'[k]nowledge capital,'" secured by intellectual property rights, is an important "foundation of economic growth" and that patent protection should be of "sufficiently broad scope to the inventor who opens a new field, to provide adequate economic incentives while avoiding duplication of effort and discouraging recourse to secrecy") (citing authority).

Thus, "placing new technology in the public domain" may decrease the "profit opportunity" and thus the incentive to "launch a new technology." *Id.* at 641

(citing authority). The *Festo* majority, however, did not consider the costs incurred, or risks taken, by innovators in new markets. *Id.* at 640. In contrast, the imitator, protected by *Festo*, incurs none of these costs or risks, and yet, unjustifiably enjoys broad protection from liability, to the innovator's detriment. *Id.* In addition, the rule prohibitively increases the costs to "individual inventors and start-up companies." *Id.* at 624 (Linn, J., dissenting). To compensate for the loss of equivalents through amendment, they likely will incur the "prohibitively high" costs and delays inherent in "exhaustive pre-filing searches" and in filing broad claims and appealing, rather than amending in response to, rejections. *Id.* The end result will be to impede rather than to advance "technological progress." *Id.*

The rule also deprives the public "of useful teachings contained in patent applications that are simply abandoned after a rejection is made regarding a critical claim limitation." *Id.* at 618 (Michel, J., dissenting). Without access to a range of equivalents, and given the risk of close imitation, inventors likely will seek trade secret protection, thus stifling the sharing of new technology. *See Graver Tank*, 339 U.S. at 607 (explaining that permitting only claims for literal infringement "would foster concealment rather than disclosure of inventions, which is one of the primary purposes of the patent system"); *cf.* A-25 (Q. Todd Dickinson, then Assistant Secretary of Commerce and Commissioner of Patent & Trademarks, noting,"[t]he ingenuity and creativity of American inventors has established the U.S. as the technological leader among nations"). Further, abandoning the doctrine devalues patents without sufficient notice to patentees, licensees or the public. *Cf. Warner-Jenkinson*, 520 U.S. at 32. *Festo* "affects myriad vested rights, on a novel legal

theory, without briefing or argument." 234 F.3d at 642 (Newman, J., dissenting).

For these reasons, the Complete Bar Rule also will harm the United States' economic and diplomatic relationships with foreign countries as well as the goal of global harmonization of patent laws. Specifically, the rule is inconsistent with the United States' encouragement of foreign nations that provide patent protection to U.S. citizens "to afford patent protection commensurate with that provided in the United States by the doctrine of equivalents." Brief for the United States as *Amicus Curiae*, 1996 WL 172221, at *1-2 (U.S. Apr. 11, 1996), filed in *Warner-Jenkinson*. Likewise, the rule will hamper the United States' goal to "enhance its ... international trade with the aid of intellectual property. Indeed, recent economic history illustrates the stagnation of the economy coinciding with periods of diminished industrial investment in technologic advance." *Hilton Davis Chem. Co. v. Warner-Jenkinson Co.*, 62 F.3d 1512, 1531 (Fed. Cir. 1995) (Newman, J., concurring), *rev'd on other grounds*, 520 U.S. 17 (1997).

The devaluation of patent rights resulting from the Complete Bar Rule likely will deter foreign licensing activities here, particularly since certain of the member countries that subscribe to TRIPS adhere to an equivalents doctrine, including Japan, Germany, France, the United Kingdom, and Australia. *See* A-22-24, 27-28 (attaching French and Australian equivalents doctrines); David Bannerman & Chris Hamer, "*Different Approaches to the 'Doctrine of Equivalents' in Germany, UK, US and Japan*," AIPPI Journal 82, 82-94, 98 (Mar. 2000) (setting forth the doctrines of equivalents in the United Kingdom, Germany and Japan and concluding: "There seems to be an international

tendency towards convergence of the law on doctrine of equivalents, at least as regards Europe and Japan.").

In addition, the Complete Bar Rule is counter to the European Patent Convention's ("EPC") goal of harmonizing patent laws. EPC Article 69 notes the need to consider, in interpreting patent claims, sources other than the claim language, such as the "'description and drawings'" and Article 69 is itself interpreted to provide "'fair protection for the patentee with a reasonable degree of certainty for third parties.'" *See* Bannerman, *supra*, at 83 (quoting EPC, Oct. 5, 1973, Protocol on the Interpretation of Article 69 of the Convention ("the Protocol")). A recent revision to the Protocol, which is not yet in force, requires consideration of an "equivalent to an element specified in the claims" in determining the "extent of protection conferred by a European patent." Act Revising the Convention on the Grant of European Patents, Nov. 29, 2000, Protocols, art. 2.

Thus, the Complete Bar Rule will create an imbalance in patent values between the U.S. and major foreign countries. Accordingly, foreigners seeking patent protection may be forced to incur the cost and delay of preparing and filing different applications in their home country and the United States to avoid loss of equivalents here. Indeed, certain foreign inventors may be reluctant to file for patent protection here, reducing revenue to the PTO, which issued 44% of its patents in 1999 to foreign residents, 25% of which were issued to Japanese and German residents. A-25-26. This imbalance in the scope of patent protection also will impede the goal of uniform and effective global patent protection, which is essential if the United States is to remain a world leader in technological innovation. *See generally* Brief for the United States as *Amicus Curiae*, *supra*, at *1-2.

The rule also is inconsistent with the United States' significant efforts, as a WIPO and SCP member, to harmonize national patent formalities on an international scale in order to provide easier access to worldwide patent protection and reduce costs to patent applicants. The draft SPLT is a product of such international efforts. *See* Discussion, *supra*, at 2-3, 14; *see also* 66 Fed. Reg. 53 (Mar. 19, 2001) (requesting comments on the SPLT).

For all these reasons, the *Festo* majority exceeded its authority in this case. Perhaps it is for Congress to determine this issue. As this Court stated: "Congress can legislate the doctrine of equivalents out of existence any time it chooses . . . . The various policy arguments made by both sides are thus best addressed to Congress, not this Court." *Warner-Jenkinson*, 520 U.S. at 28. Indeed, Congress implicitly supported the doctrine by passing the Patent Act in 1952, after *Graver Tank* was decided, without attempting to legislate around the doctrine. *See id.* at 25-27.

Finally, the *Festo* majority's implied warning that the flexible bar approach will "undermine the claiming system and destroy the public's ability to rely on the patent claiming system to mark the boundaries granted to the patentee" is one that has been voiced since 1853 in dissenting opinions in cases upholding the flexible bar. *Id.* at 627-28 (Linn, J., dissenting). However, the concerns underlying these dire predictions are misplaced, and, significantly, have not come to pass. *Id.* If this Court does not grant the petition for certiorari, leaving *Festo* as the law will, *inter alia* (1) render the United States non-compliant with its international commitments under TRIPS; (2) disrupt the continued pursuit of substantive harmonization of patent laws; (3) negatively impact ongoing efforts to reduce the costs of obtaining patent protection here and

abroad; and (4) directly harm the role of the U.S. as a world leader in technological innovation.

CONCLUSION

For all the foregoing reasons, the petition for a writ of certiorari should be granted in this case.

Respectfully submitted,

Maxim H. Waldbaum
Counsel of Record
Lori D. Greendorfer
Salans Hertzfeld Heilbronn
Christy & Viener
620 Fifth Avenue
New York, New York
10020

R. Danny Huntington
Raymond C. Stewart
John P. Sutton
Tipton D. Jennings IV
Fédération Internationale
Des Conseils En
Propriété
Industrielle

May 9, 2001

APPENDIX

TABLE OF CONTENTS

World Intellectual Property Organization, Geneva, Standing Committee On the Law of Patents, Fourth Session, Geneva, November 6 to 10, 2000, Suggestions for the Further Development of International Patent Law A-1

WIPO World Intellectual Property Organization, Geneva, Standing Committee On the Law of Patents, Fifth Session, Geneva, May 14 to 19, 2001, Draft Substantive Patent Law Treaty A-12

WIPO World Intellectual Property Organization, Geneva, Standing Committee On the Law of Patents, Fifth Session, Geneva, May 14 to 19, 2001, Draft Regulations And Practice Guidelines Under

The Draft Substantive Patent Law Treaty A-18

Doctrine of Equivalents in France (Cabinet Beau de Lomenie, Conseils En

Propriété Industrielle).....A-22

1999 Patent Statistics Announced

(Press Release #00-16, Mar. 2, 2000).....A-25

Doctrine of Mechanical Equivalents

(IP Australia, APO Manual of Practice &

Procedure).....A-27

WORLD INTELLECTUAL PROPERTY ORGANIZATION

GENEVA

STANDING COMMITTEE ON THE LAW OF PATENTS

Fourth Session

Geneva, November 6 to 10, 2000

SUGGESTIONS FOR THE FURTHER DEVELOPMENT OF INTERNATIONAL PATENT LAW

Document prepared by the International Bureau

I. Introduction

1. The Program and Budget for 2000-2001 includes, under Sub-Program 09.1, "Law of Patents," the following activities, *inter alia* (see document A/34/2-WP/PBC/2, page 80, emphasis added):

> "Convening of four meetings* of the SCP (and any Working Group set up by this Committee), to consider issues relating to the law of patents, including:
>
> - the finalization of the draft Patent Law Treaty and draft Regulations, using wherever possible solutions adopted for PCT procedures: convening of a Diplomatic Conference for the conclusion of the Patent Law Treaty, and *consideration of the desirability and feasibility of further harmonizing patent law*;
>
> ..."

2. During the 1998-1999 biennium, the Standing Committee on the Law of Patents (SCP) devoted its time to the negotiation and finalization of the Patent Law Treaty (PLT), which was adopted at the Diplomatic Conference for the Adoption of the PLT, held in Geneva from May 11 to June 2, 2000.

3. Concerning the future work of the SCP, during its earlier sessions as well as at the PLT Diplomatic Conference, a considerable number of delegations and

---

* One of these four sessions has been replaced by the Diplomatic Conference for the Adoption of the Patent Law Treaty.

representatives have expressed their wish to consider issues related to further harmonization of substantive requirements of patent law after the conclusion of the PLT.

4. The present document contains suggestions for issues related to further harmonization of patent laws for consideration by the SCP at its fourth session (the first time the SCP will meet during the 2000-2001 biennium), and at its future sessions.

II. Issues related to further harmonization for consideration by the SCP

5. A number of delegations and representatives had expressed the position, at the first session, first part, of the SCP (June 15 to 19, 1998), that discussions concerning further harmonization, in particular harmonization of substantive issues of patent law, should be resumed as soon as possible after the conclusion of the Diplomatic Conference (see document SCP/1/7, paragraphs 24, 25, 27, 33, 34, 35, 37, 40, 44, 55, 56, 57, 58 and 73). In this context, it may be noted that, at its third meeting held on May 4 and 5, 2000, the Industry Advisory Commission of WIPO adopted a Resolution calling for "work, in the medium term, on a treaty on the harmonization of substantive patent law, with a view to facilitating greater mutual recognition of search and examination results by patent Offices." In addition, the Policy Advisory Commission of WIPO made several recommendations at its meeting of June 15, 2000, among which one reads as follows: "that efforts should be made towards further substantive harmonization in the field of industrial property law, in particular, patent law."

6. It should be noted that the Patent Cooperation Treaty (PCT), which has established a system for the filing of international patent applications having the same effect as national applications filed in each of the PCT Contracting States designated in the international application, contains a number of principles of substantive patent law applicable to the international phase provided under the PCT. However, it may also be noted that PCT Article 27(5) allows a Contracting State to apply any substantive conditions of patentability as it desires during the national phase.

7. In response to international calls for harmonization of national and regional patent laws, negotiations had started, as early as 1985, on a draft Treaty Supplementing the Paris Convention as far as Patents are Concerned (hereafter referred to as "draft Patent Harmonization Treaty 1991"), which was discussed at the first part of a Diplomatic Conference in 1991, but never concluded. The draft Patent Harmonization Treaty of 1991 included substantive as well as formal aspects of patent law. Some of its provisions, for instance those on patentable subject matter, rights conferred, term of protection and reversal of burden of proof for process patents, were incorporated into the Agreement on Trade-Related Aspects of Intellectual Property Rights (TRIPS Agreement), concluded in 1994. Nevertheless, a number of issues in respect of national and regional patent law have neither been addressed by the TRIPS Agreement, nor by any other worldwide international treaty on patent law, in particular not by the recently adopted PLT, which covers only patent formalities. For the sake of completeness, it should be added that important steps in respect of such harmonization have

been achieved in the framework of certain regional systems, such as the European Patent Organisation (EPO), the Eurasian Patent Organization (EAPO), the African Regional Industrial Property Organization (ARIPO) and the Organisation africaine de la propriété intellectuelle (OAPI), as well as through the harmonization of national laws within certain regional systems, as for instance the Andean Pact.

8. The need for further patent harmonization beyond the PLT arises mainly from the fact that the costs of obtaining broad patent protection on an international level have become extremely high. The objective of further harmonization should therefore be to lower costs. This goal can, however, only be envisaged if a number of basic legal principles underlying the grant of patents are harmonized.

9. In view of the present situation and the objective mentioned above, the International Bureau suggests that at least the following basic issues underlying the grant of patents, which are of particular importance to the further development of the international patent system, could be included in the discussions of the SCP: the definitions of prior art, novelty, inventive step (non-obviousness) and industrial applicability (utility); sufficiency of disclosure; and the structure and interpretation of claims.

10. In order to facilitate discussions of the SCP concerning the desirability and feasibility of further harmonizing patent law, each of the six mentioned issues are described below by (1) explaining the basic issue, (2) giving examples of the present status of laws and practices between different systems showing the existence of, or need for further, harmonization, and (3) indicating the relevant provisions under the first

draft Patent Harmonization Treaty of 1991 and the solution proposed therein. The Basic Proposal for the draft Patent Harmonization Treaty of 1991 and the Regulations are presented, for information purposes, in document SCP/4/3. The Notes for the Basic Proposal for the draft Patent Harmonization Treaty of 1991 and the Regulations are contained in document SCP/4/4.

A. Prior art

The basic issue

11. Prior art is generally understood to constitute the body of knowledge which was available to the public before the filing date or, if priority is claimed, before the priority date, of a patent application. Identifying the relevant prior art is one of the cornerstones of patent examination, since such prior art will be evaluated during examination to determine the patentability of the invention concerned. It is by comparing the invention for which protection is sought with the prior art that novelty and inventive step (non-obviousness) of the invention are established. Furthermore, prior art will, after the grant of a patent, be determining in order to evaluate the validity or invalidity of the patent.

12. Some of the issues to be considered in the context of prior art include, in particular, notions such as "availability to the public," "person skilled in the art," and "means of making available to the public." Further items to be considered are, in particular, issues such as non-prejudicial disclosures, the grace period, or the question of applications filed earlier than, but published after, the date of filing of the application concerned.

Draft Patent Harmonization Treaty 1991

32. The Basic Proposal for the draft Patent Harmonization Treaty of 1991 contained, in Article 25 "Obligations of the Right Holder," two alternatives. Alternative A proposed to include no provision on this subject at all, while alternative B contained the following provision relating to the disclosure of an invention in Article 25(1):

> "(1) The owner of a patent shall have at least the following obligations in addition to any other provided for in this Treaty:
>
> (i) to disclose the invention in a manner sufficiently clear and complete for the invention to be carried out by a person skilled in the art; the description shall set forth at least one mode for carrying out the invention claimed; this shall be done in terms of examples, where appropriate, and with reference to the drawings, if any; however, any Contracting Party may provide that the description set forth the best mode for carrying out the invention known to the inventor at the filing date or, where priority is claimed, priority date of the application; ..."

F. Drafting and interpretation of claims

The basic issue

33. The claims define the invention, and thus the scope of protection of the patent. They are therefore the heart of the patent. This is true in particular after the grant of the patent, since others may not commercially use what is covered by the claims, but may use any other information contained in the specification. It is therefore particularly important

that claims contain all the important features of the claimed invention. The claims form the basis for the examination as to the patentability of the invention. In addition, they may be affected by partial renunciation or invalidity of the patent, and they are relevant for the question of unity of invention. They also play a role when defining the contents of two inventions in the case of dependency or priority contests under the first to invent system, and when assessing the identity of inventions in the framework of the prohibition of double patenting.

34. When talking about claims, there are two different aspects to take into consideration: firstly, the drafting of the claims, and secondly the interpretation of the claims.

Status of harmonization

35. Article 6 of the PCT states the following:

"The Claims

The claim or claims shall define the matter for which protection is sought. Claims shall be clear and concise. They shall be fully supported by the description."

36. In addition, PCT Rule 6 contains, in particular, indications on the manner of claiming, on the numbering of claims, as well as further details. In the context of claims, it may be mentioned that PCT Rule 13 deals with the issue of unity of invention.

37. Nevertheless, both the drafting and the interpretation of claims diverge significantly in different legal systems, which may lead to different scopes of protection for the same invention, and to different results in the case of

invalidity determinations. Some of these differences are described below.

Drafting of claims

(a) Certain systems require that only the *technical* features of the invention be contained in the claims, but not other features, such as economical or other elements. This is not the case for all patent systems. It has to be noted, however, that not all systems require an invention to have a technical character.

(b) While certain patent systems require a two-part form of the claims (the first part containing the designation of the subject matter belonging to the prior art, the second part being the characterizing part indicating the new technical features for which protection is claimed), other systems do not require this kind of structure, so that the prior art basis does not always appear in the claims.

(c) Certain patent laws allow for a plurality of closely related independent claims reflecting a single inventive concept to be contained in the same application ("unity of invention"), while according to other laws, the respective provisions are applied in a very narrow manner.

(d) While certain legal systems allow for different categories of claims, such as for instance product, process or apparatus claim, to be included in the same application, other patent systems have restrictions in this respect.

(e) Certain patent systems provide for restrictions on the dependency of sub-claims, which lead to a high number of dependent claims and, in certain offices, to

high costs due to additional fees to be paid for each claim in excess of a certain number.

(f) Certain systems allow the lack of support of the claims by the description to be a ground for rejection or invalidation of the patent.

Interpretation of claims

(a) In most patent systems, the literal text of the claims forms the basis for the determination of the scope of protection of the patent. However, while certain systems do not allow an interpretation of the claims to go much beyond their wording, others have developed a broad way of interpreting the claims.

(b) In certain systems the claims have to be interpreted in an objective manner, while in others, what the inventor subjectively had intended to say is taken into consideration.

(c) In certain patent systems, only the description and the drawings may be used in order to interpret the claims. In other systems, further - or additional - means of interpreting the claims may be allowed.

(d) While certain legal systems provide that equivalents are covered by the claims, other legal systems do not provide for equivalents. In many systems, the doctrine of equivalents has been developed by case law, and is not to be found in statutory law. Systems vary widely as to the scope of equivalents applied.

(e) The possibilities to amend the claims during examination, as well as after the grant of the patent, vary considerably in different systems.

Draft Patent Harmonization Treaty 1991

38. The Basic Proposal for the draft Patent Harmonization Treaty of 1991 contained the following detailed provisions related directly or indirectly to claims: Articles 4 ("Claims"), 5 ("Unity of Invention") and 21 ("Extent of Protection and Interpretation of Claims"), and Rules 3 ("Manner of Claiming") and 4 ("Details Concerning the Requirement of Unity of Invention").

IV. Conclusion

39. In view of the above, the SCP is invited to note and consider the suggested issues related to the further development of international patent law. The SCP is invited, in particular, to express its guidance to the International Bureau as to whether and to what extent the mentioned issues should be included in the future work of the SCP.

WIPO

WORLD INTELLECTUAL

PROPERTY ORGANIZATION

GENEVA

STANDING COMMITTEE ON THE LAW OF PATENTS

Fifth Session

Geneva, May 14 to 19, 2001

DRAFT SUBSTANTIVE PATENT LAW TREATY

prepared by the International Bureau

INTRODUCTION

1. At its fourth session, held from November 6 to 10, 2000, the Standing Committee on the Law of Patents (SCP) agreed that the International Bureau should submit draft provisions for a future legal instrument on the substantive harmonization of patent law. The present document contains a first draft of a Treaty, presently called the "Substantive Patent Law Treaty (SPLT)." It takes into account the views expressed at the fourth session of the SCP.

2. The SCP further expressed the wish that the International Bureau should submit two distinct versions of draft provisions on the SPLT: one version should be based on existing texts, such as the "Draft Treaty Supplementing the Paris Convention as Far as Patents Are Concerned" ("1991 Draft"; see documents PLT/DC/3 and 69) or the Patent Cooperation Treaty (PCT), while the second version should use new and plain language. In the course of drafting the present document, it became apparent that it may be more appropriate to establish a single text containing two alternatives. Thus, the document contains, where appropriate, an Alternative A, which is based upon, but is not necessarily identical to, existing texts as explained above, and an Alternative B, which uses more contemporary language. Where the text of Alternative A is not identical to earlier existing texts, such as, for example, the 1991 Draft, this is to take into account the international developments that occurred since the establishment of these texts, and to reflect the wish of the SCP to achieve full harmonization, without permitting territorial

differences between countries. As agreed by the SCP at its fourth session, the draft provisions are limited to certain determined issues, in particular those contained in paragraph (9) of document SCP/4/2.

3. It should be noted that certain of the suggested provisions (for example draft Article 9) reflect a first-to-file system, since their origin is to be found in existing texts. This approach does, however, not prejudice the future drafting of the relevant provisions in any way, but was chosen merely to reflect certain provisions of existing texts, such as the 1991 Draft.

4. Draft Regulations and Draft Practice Guidelines under the SPLT are contained in document SCP/5/3. These provisions are presented without an alternative and are based on existing texts only, since their future wording will depend on the choice of the SCP with respect to the drafting style of the Articles.

PART I: GENERAL PROVISIONS

Article 1

Abbreviated Expressions

For the purposes of this Treaty, unless expressly stated otherwise:

(i) except where the context indicates otherwise, words in the singular include the plural, and *vice versa*, and masculine personal pronouns include the feminine.

Article 1bis

Applications [and Patents] to Which the Treaty Applies

(1) [*Principle*] Subject to paragraph (2), the provisions of this Treaty and the Regulations shall apply to[:

(i)] applications for patents for invention and for patents of addition, which are filed with or for the Office of a Contracting Party[;

(ii) patents for invention, and to national and regional patents of addition, which have been granted with effect for a Contracting Party].

(2) [Reserved]

Article 13

Scope of Claims

[Alternative A]

[No provision.]

[End of Alternative A]

[Alternative B]

The scope of the claim shall not exceed the scope of the disclosure of the application. However, the claim shall not be limited to what is expressly disclosed in the application.

[End of Alternative B]

Article 14

[Alternative A]

Scope of Protection

(1) [*Scope*] The scope of protection conferred shall be determined by the claims, which are to be interpreted in the light of the description and drawings, as prescribed in the Regulations.

[(2) [*Equivalents*] For the purpose of determining the scope of protection conferred by the application, due account shall be taken of elements which are equivalent to the elements expressed in the claims, as prescribed in the Regulations.]

[End of Alternative A]

[Alternative B]

Interpretation of Claims

For the purposes of examination, and of determining rights under a published application, each claim shall be interpreted in light of the [description, drawings] [disclosure] and the prior art, as prescribed in the Regulations.

[End of Alternative B]

WORLD INTELLECTUAL PROPERTY ORGANIZATION

GENEVA

STANDING COMMITTEE ON THE LAW OF PATENTS

Fifth Session

Geneva, May 14 to 19, 2001

DRAFT REGULATIONS AND PRACTICE GUIDELINES UNDER THE DRAFT SUBSTANTIVE PATENT LAW TREATY

prepared by the International Bureau

INTRODUCTION

The present document contains draft Regulations and draft Practice Guidelines under the draft Substantive Patent Law Treaty (SPLT), which is contained in document SCP/5/2.

Unlike in the draft SPLT, the draft Regulations and draft Practice Guidelines contained in the present document are based on existing texts only. No alternatives are suggested at this stage, since their future wording will depend on the choice of the SCP with respect to the drafting style of the draft SPLT (see also the explanations given in the introduction part of document SCP/5/2).

Rule *11*
Interpretation of Claims Under Article 14

(1) [*Principle*] For the purposes of Article 14(1), the claims shall be so interpreted as to combine fair protection for the applicant with a reasonable degree of certainty for third parties. Consequently, the claims shall not be interpreted as being necessarily confined to their strict literal wording. Neither shall the claims be considered as mere guidelines allowing that the protection conferred by the application extends to what, from a consideration of the description and drawings by a person skilled in the art, the applicant has contemplated, but has not claimed.

[(2) [*Equivalents*] For the purposes of Article 14(2), an element shall generally be considered as being equivalent to an element as expressed in a claim if, at the time of any alleged infringement, it performs substantially the same function in substantially the same way and produces substantially the same result as the element as expressed in the claim, and it is obvious to a person skilled in the art that the same result as that achieved by means of the element as expressed in the claim can be achieved by means of the equivalent element.

(3) [*Prior Statements*] In determining the scope of protection, due account shall be taken of any statement limiting the scope of the claims made by the applicant during procedures concerning the grant or the validity of the patent.]

[Rule 11, continued]

(4) [*Examples*] If the application contains examples of the embodiment of the invention or examples of the functions or results of the invention, the claims shall not be interpreted as limited to those examples; in particular, the mere fact that a product or process includes additional features not found in the examples disclosed in the patent, lacks features

found in such examples or does not achieve every objective or possess every advantage cited or inherent in such examples shall not remove the product or process from the scope of protection conferred by the claims.

(5) [*Abstract*] The abstract shall not be taken into account for the purpose of determining the protection conferred by the claims.

Cabinet Beau de Loménie

CONSEILS EN PROPRIÉTÉ INDUSTRIELLE

Doctrine of equivalents in France

(1) DEFINITION

A product or a method is considered as a technical equivalent to a patented product or to a patented method if, being similarly applied, it reproduces the function of the claimed means with a view to obtain the same result or a result of similar nature, while having a different form or structure.

(2) APPLICATION OF THE DOCTRINE OF EQUIVALENTS TO ASSESSMENT OF INFRINGEMENT

(a) It is assumed that a patent claim covers particular means characterised by its form, by its application and by its function within the frame of that application.

It is also assumed that an alleged infringing object, being similarly applied, provides the same function, leading to a similar result, but has a different structure or form.

The Judge will first determine whether the function of the claimed means is new.

If the function is not new, i.e. if the prior art shows that means were already known which carried out the same function to provide a similar result, then there can be no infringement, because the claims cover only the particular form or structure and the scope of the claim cannot be extended to cover the function.

If the function is new, then there is infringement.

The above has been constantly assessed by French Courts. For instance, in Bennes Saphen v/s Guina et al. (Paris Appeal Court, December 1st, 1988) :

"...an invention being characterised by its form, by the application thereof and by its function, when the function is not new and when, by way of consequence, the patent cannot protect it, means having a different implementation form and carrying out the same function as the claims means cannot constitute an infringement by equivalence, the result not having to be taken into consideration".

The above decision has been confirmed by the Supreme Court (Cour de Cassation) on December 4, 1990:

"It is rightfully that a decision has dismissed an allegation of infringement by equivalence, having stated that the combination of means of the invention carries out a known function, and that the patent could only cover that combination in its particular form, and having checked that the alleged infringing device, although having the same function, had a structure different from the one claimed by the patent".

Thus to be held infringing, it is not sufficient that a device or a process be equivalent to a claimed device, or process (i.e. has the same function when applied in a similar way to achieve a similar result) ; it is also necessary that the function of the claimed device or process be in itself novel.

(b) It is assumed that a patent claim covers a particular combination of features which is new and inventive.

It is also assumed that an alleged infringing object reproduces the same combination of features except one (or several) being different in its (or their) form.

If it can be shown that the concerned feature of the alleged infringing object, although having a different form, is equivalent to a corresponding feature of the claimed invention, then infringement will be stated.

It is not then required to show that the function of that particular feature is new in itself. It is only necessary that this particular feature carries out the same function as a corresponding feature of the claimed combination, and co-operates with the other features in a similar way.

© Cabinet Beau De Loménie, 1999

PTO COMMISSIONER TO HOST ONLINE DIALOG
http://www.uspto.gov/web/offices/com/speeches/00-16.htm

PRESS RELEASE #00-16 CONTACT: Brigid Quinn
March 2, 2000 Kim Byars
703-305-8341

1999 PATENT STATISTICS ANNOUNCED

In calendar year 1999, the U.S. Patent and Trademark Office (PTO) granted record 169,154 patents, including 153,493 utility (inventions), 14,732 design, and 421 plant patents. In calendar year 1998, PTO issued 163,208 patents.

U.S. resident inventors received 55.6% of all U.S. patents in 1999. California resident inventors claimed a 20.0 percent share (18,865 patents) of these patents, followed by inventors from New York (7.3 percent, 6,900 patents), Texas (6.8 percent, 6,424 patents), New Jersey (4.6 percent, 4,372 patents), and Illinois (4.6 percent, 4,308 patents). Inventors in Puerto Rico, Idaho, South Dakota, Kentucky, Arkansas, Kansas, and Wyoming had the largest percentage increases in patents from 1998 to 1999.

"The ingenuity and creativity of American inventors has established the U.S. as the technological leader among nations, fueling this country's longest economic expansion," noted Q. Todd Dickinson, Assistant Secretary of Commerce and Commissioner of Patents and Trademarks.

Forty four percent of U.S. patents were issued to residents of foreign nations. The ten foreign countries that received the most U.S. patents during calendar year 1999 are displayed below. For more statistics, please visit

http://www.uspto.gov/web/offices/com/speeches/pattr99.pdf

1999 1999 Share of (1998) (1998 to 1999)

Rank	# Patents	All Patents	Country*	(Rank in 1998)	(# Patents)	(Change in # Patents)
1	32,515	19.2%	Japan	(1)	(32,119)	(+1.2%)
2	9,896	5.9%	Germany	(2)	(9,582)	(+3.3%)
3	4,526	2.7%	Taiwan	(4)	(3,805)	(+18.9%)
4	4,097	2.4%	France	(3)	(3,991)	(+2.7%)
5	3,900	2.3%	United Kingdom	(5)	(3,726)	(+4.7%)
6	3,679	2.2%	South Korea	(7)	(3,362)	(+9.4%)
7	3,678	2.2%	Canada	(6)	(3,537)	(+4.0%)
8	1,686	1.0%	Italy	(8)	(1,820)	(-7.4%)
9	1,542	0.9%	Sweden	(11)	(1,346)	(+14.6%)
10	1,396	0.8%	Netherlands	(9)	(1,382)	(+1.0%)

*Please note that the country of origin is determined by the residence of the first-named inventor.

APO Manual Of Practice And Procedure

IP Australia

PATENTS-TRADEMARKS-DESIGNS

3.10 DOCTRINE OF MECHANICAL EQUIVALENTS

3.10.1 The task of the court in considering anticipation was explained in *General Tire & Rubber Co v The Firestone Tyre & Rubber Co Ltd*, (1972) RPC 457 at page 485, as follows:

> "To determine whether a patentee's claim has been anticipated by an earlier publication it is necessary to compare the earlier publication with the patentee's claim ... The construction of these documents is a function of the court, being a matter of law, but, since documents of this nature are almost certain to contain technical material, the court must, by evidence, be put into the position of a person of a kind to whom the document is addressed ...."

3.10.2 In the course of dealing with an objection to grant for want of novelty, the courts have had regard to the **doctrine of mechanical equivalents**. That is, whether, on the evidence before the court, the difference between the claimed invention and the alleged anticipation represented no more than the substitution of an inessential feature with an obvious **equivalent**.

See e.g. *R D Werner & Co Inc v Bailey Aluminium Products Pty Ltd*, (1989) 13 IPR 513.

(It may be noted that the courts appear to have taken the view that if a feature of the claim has a mechanical (i.e. functional) **equivalent** in the alleged anticipation, then *ipso facto* the feature must be inessential. Furthermore, the existence of mechanical **equivalents** has been

determined from evidentiary material (which generally would not be available to examiners), and not as a matter of construction.)

3.10.3 In any event, the real issue to decide when using the reverse infringement test to judge lack of novelty is whether a prior disclosure contains a clear description of, or clear instructions to make, something that possesses all the <u>essential</u> features of the claim. For this reason, examiners should not concern themselves whether an inessential feature of the claim replaces a feature of the prior art disclosure with a mechanical **equivalent**.

Supreme Court, U.S.
FILED
MAY 8
OFFICE OF THE CLERK

(6)

No. 00-1543

In the
Supreme Court of the United States

FESTO CORPORATION,

Petitioner,

v.

SHOKETSU KINZOKU KOGYO KABUSHIKI CO., LTD., A/K/A SMC CORPORATION, AND SMC PNEUMATICS, INC.,

Respondents.

On Petition for Writ of Certiorari to the United States Court of Appeals for the Federal Circuit

BRIEF AMICUS CURIAE OF THE INTELLECTUAL PROPERTY LAW ASSOCIATION OF CHICAGO IN SUPPORT OF NEITHER PARTY

CYNTHIA A. HOMAN
(Counsel of Record)
Brinks Hofer Gilson & Lione
NBC Tower, Suite 3600
455 N. Cityfront Plaza Drive
Chicago, Illinois 60611
(312) 321-4200

JEROLD A. JACOVER, President
The Intellectual Property
Law Association of Chicago
Post Office Box 472
Chicago, Illinois 60609
(312) 987-1416

Counsel for Amicus Curiae,
THE INTELLECTUAL PROPERTY
LAW ASSOCIATION OF CHICAGO

May 2001

16 pp

TABLE OF CONTENTS

PAGE

INTEREST OF THE AMICUS 1

SUMMARY OF ARGUMENT 2

ARGUMENT 3

I. THIS COURT'S DECISION IN *WARNER-JENKINSON* MAKES IT VITAL THAT THIS COURT REVIEW THE FEDERAL CIRCUIT'S DECISION 3

II. THE FEDERAL CIRCUIT'S DECISION HAS GENERATED WIDESPREAD CONCERN IN THE PATENT COMMUNITY THAT THIS COURT MUST ALLEVIATE 6

III. THIS COURT'S REVIEW IS NEEDED TO CONSIDER THE WISDOM OR FOLLY OF THE ABSOLUTE RULES LAID DOWN BY THE FEDERAL CIRCUIT 10

CONCLUSION 12

TABLE OF AUTHORITIES

Cases: PAGE(S)

Control Res., Inc. v. Delta Elecs., Inc.,
133 F. Supp. 2d 121 (D. Mass. 2001) 8, 9

Festo Corp. v. Shoketsu Kinzoku Kogyo Kabushiki Co., 234 F.3d 558 (Fed. Cir. 2000) ..... *passim*

Graver Tank & Mfg. Co. v. Linde Air Prods. Co.,
339 U.S. 605 (1950) 4

Hughes Aircraft Co. v. United States,
717 F.2d 1351 (Fed. Cir. 1983),
overruled by Festo Corp. v. Shoketsu Kinzoku Kogyo Kabushiki Co.,
234 F.3d 558 (Fed. Cir. 2000) 5

Pharmacia & Upjohn Co. v. Mylan Pharm., Inc.,
170 F.3d 1373 (Fed. Cir. 1999) 4

Warner-Jenkinson Co. v. Hilton Davis Chem. Co.,
520 U.S. 17 (1997) 2, 3, 4, 5

Statutes:

35 U.S.C. § 112 10

Other Authorities:

Janice M. Mueller,
Festo Presto! The Incredible Disappearing Doctrine of Equivalents, 3 JMLS CENTER FOR INTELL. PROP. L. NEWS SOURCE 1 (2001) 9

Neal M. Cohen,
The Rule O'Festo, 19 IPL NEWSL. 2 (A.B.A.), Winter 2001 9

Report of Committee No. 605,
Intell. Prop. L. Section, A.B.A., 2000-2001 Annual Report (forthcoming 2001)
(summarized in 61 PAT. TRADEMARK & COPYRIGHT J. (BNA) 1513 (2001)) 8

Richard A. Kaplan,
Competitors Find It Easier To Avoid Liability For Infringement, 24 THE CHICAGO LAW. 3 (2001) 8

W. David Wallace,
Life After Festo: Guarding Against Copyists, INTELL. PROP. TODAY, Jan. 2001 9

William M. Atkinson, Bruce J. Rose and John A. Wasleff, *Was Festo Really Necessary?*, 83 J. PAT. & TRADEMARK OFF. SOC'Y 111 (2001) 8

The Intellectual Property Law Association of Chicago (IPLAC) submits this brief as Amicus Curiae in the above action in support of Petitioner's request for certiorari.[1] IPLAC has the permission of the parties to submit this brief.

INTEREST OF THE AMICUS

IPLAC was founded in 1884, and is the oldest intellectual property law association in the nation. Its 820 members include law firm attorneys, sole practitioners, corporate attorneys, law school professors, and law students.

IPLAC is a not-for-profit organization dedicated to maintaining a high standard of professional ethics in the practice of patent, trademark, copyright, trade secret, and associated fields of law. A principal aim is to aid in the development and administration of these laws and the manner by which they are applied by the courts and by the United States Patent and Trademark Office (PTO). IPLAC is further dedicated to providing a medium for the exchange of views on intellectual property law between those practicing in the field and to educating the public at large.

Consistent with its stated mission, IPLAC writes to assist this Court in understanding the significant impact of the Federal Circuit's decision on the patent com-

---

[1] Pursuant to Rule 37.6, IPLAC states that: (1) counsel to a party did not author this brief, in whole or in part; and (2) no person or entity other than IPLAC and its counsel made a monetary contribution to the preparation or submission of the brief.

munity, wholly apart from the immediate interests of the parties. The Federal Circuit's decision has triggered a nationwide debate unmatched in recent memory. In the Midwest, the historical center of industrial and technological development in this country, the patent community is of the strong view that the Federal Circuit's decision so dramatically alters patent law jurisprudence and patent prosecution practice that this Court must review the decision to insure that it comports with this Court's precedent, and that it represents the desired direction of patent protection and enforcement in the United States. If the decision falls short on either count, only this Court is in a position to change the course of the law.

SUMMARY OF ARGUMENT

The Federal Circuit's decision draws bright-line rules with respect to prosecution history estoppel. The decision significantly impacts: (1) owners of the 1.2 million unexpired United States patents; (2) parties to the untold number of extant patent license agreements; (3) patent law jurisprudence; (4) patent prosecution practice; and (5) research and development in the United States.

The Federal Circuit's split decision (six of the sitting judges wrote or joined separate opinions of concurrence and dissent) signals sharply diverse opinions among reasoned thinkers on the difficult issues decided. A key area of disagreement was whether the decision conflicts with decisions of this Court, especially *Warner-Jenkinson Co. v. Hilton Davis Chemical Co.*, 520 U.S. 17 (1997). The immediate and continuing explosion of fervent discourse in the aftermath of the Federal Circuit's decision demonstrates that the vast patent community of attorneys, educators, inventors, and industry leaders are as fractured and troubled as the Federal Circuit by the impact of that court's decision.

This Court's seasoned wisdom and authority of finality is needed to assure the public that the issues have been fully explored, and that their resolution is consistent with this Court's precedent and with sound patent jurisprudence. The issues are of such immediate significance to so many people and companies that they cannot be permitted to percolate without this Court's intervention. This is particularly so because only the Federal Circuit hears appeals in patent cases, and therefore the other Circuit Courts of Appeal will have no opportunity to weigh in on the subject.

IPLAC does not take a position here as to how this Court should ultimately rule, but only urges the Court to review the Federal Circuit's decision.

ARGUMENT

I. THIS COURT'S DECISION IN *WARNER-JENKINSON* MAKES IT VITAL THAT THIS COURT REVIEW THE FEDERAL CIRCUIT'S DECISION

As the petition points out (pp. 2, 19), the doctrine of equivalents plays a central role in nearly every patent infringement action. Under the doctrine of equivalents, "a product or process that does not literally infringe upon the express terms of a patent claim may nonetheless be found to infringe if there is 'equivalence' between the elements of the accused product or process and the claimed elements of the patented invention." *Warner-Jenkinson*, 520 U.S. at 21. The doctrine of

equivalents prevents the "unscrupulous copyist" from "mak[ing] unimportant and insubstantial changes and substitutions in the patent which, though adding nothing, would be enough to take the copied matter outside the [patent] claim, and hence outside the reach of law." *Graver Tank & Mfg. Co. v. Linde Air Prods. Co.*, 339 U.S. 605, 607 (1950).

In competition with the goal of preventing the unscrupulous copyist from taking advantage by creative hair-splitting is the equally important goal of notifying the public of the scope of a patent's claims. *Warner-Jenkinson*, 520 U.S. at 29. The doctrine of prosecution history estoppel historically has been the primary instrument for insuring that the notice goal is met. *Id.* at 33-34. Under the doctrine, a patentee is precluded "from obtaining under the doctrine of equivalents coverage of subject matter that has been relinquished during the prosecution of its patent application." *Pharmacia & Upjohn Co. v. Mylan Pharm., Inc.*, 170 F.3d 1373, 1376 (Fed. Cir. 1999).

In response to Question 1, the Federal Circuit held that an amendment made for *any* statutory requirement for patentability gives rise to prosecution history estoppel. *Festo Corp. v. Shoketsu Kinzoku Kogyo Kabushiki Co.*, 234 F.3d 558, 566 (Fed. Cir. 2000). However, in *Warner-Jenkinson*, this Court apparently rejected such an absolute rule. Although aware that "there are a variety of other reasons why the PTO may request a change in claim language," 520 U.S. at 31, the Court concluded that its "prior cases have consistently applied prosecution history estoppel only where claims have been amended for a limited set of reasons, and we see no substantial cause for requiring a more rigid rule invoking an estoppel regardless of the reasons for a

change." *Id.* at 32. Thus, rather than adopting an absolute rule, such as that laid down by the Federal Circuit, this Court reasoned that, when deciding whether there is an estoppel, a court should "explore . . . the reason (right or wrong) for the objection and the manner in which the amendment addressed and avoided the objection." *Id.* at 33 n.7.

The Federal Circuit's response to its Question 3 also merits this Court's review in light of *Warner-Jenkinson*. The Federal Circuit responded to Question 3 by completely barring application of the doctrine of equivalents to an amended claim element. 234 F.3d at 569. Prior to this decision, almost without exception, the court followed the approach crafted by former Chief Judge Howard Markey in *Hughes Aircraft Co. v. United States*, 717 F.2d 1351 (Fed. Cir. 1983), *overruled by Festo Corp. v. Shoketsu Kinzoku Kogyo Kabushiki Co.*, 234 F.3d 558 (Fed. Cir. 2000). According to *Hughes*, prosecution history estoppel may limit a patentee's right to rely on infringement under the doctrine of equivalents "within a spectrum ranging from great to small to zero." *Id.* at 1363.

In *Warner-Jenkinson*, this Court appears to have endorsed the flexible approach of *Hughes*, which the Federal Circuit's decision overruled, 234 F.3d at 574. For example, the Court in *Warner-Jenkinson* expressed its belief that, if the doctrine of equivalents were required to be applied to each element of a claim, this alone would serve to insure that the doctrine would not encroach beyond its fair limits and diminish the public-notice function of statutory claiming. 520 U.S. at 29-30. In so stating, the Court appears to have rejected an absolute approach such as the Federal Circuit's complete bar. Indeed, as the petition points out (p. 22),

this Court in *Warner-Jenkinson* cited with apparent approval case law that quoted the flexible rule of *Hughes*.

Granting the petition is warranted: (1) to clarify whether the Federal Circuit's decision is in accord with *Warner-Jenkinson*, despite seemingly contrary language in that decision; (2) to explain why the Federal Circuit's apparent departure from this Court's precedent is appropriate, if this Court is of that view; and (3) to bring the law of prosecution history estoppel back into line with this Court's precedent, if necessary.

II. THE FEDERAL CIRCUIT'S DECISION HAS GENERATED WIDESPREAD CONCERN IN THE PATENT COMMUNITY THAT THIS COURT MUST ALLEVIATE

This Court is well aware from the petition (pp. 2-12) that not all of the judges of the Federal Circuit are in agreement with the absolute rules laid down by the majority. Indeed, there is sharp division within the Federal Circuit, particularly with respect to Question 3, as evidenced by the strong language of the numerous dissenting and concurring opinions. 234 F.3d at 591-642.

The reasons for the disagreement with the majority's decision are many, including: (1) that it is contrary to this Court's precedent, 234 F.3d at 598, 601-09 (Michel, J., dissenting), 234 F.3d at 631-34 (Newman, J., dissenting); (2) that it summarily nullifies a large body of Federal Circuit law that litigants and the patent bar have acted in reliance upon, 234 F.3d at 609-15 (Michel, J., dissenting), 234 F.3d at 634 (Newman, J., dissenting); (3) that it provides a "fail-safe" method for copyists to avoid infringement liability, 234 F.3d at 616 (Michel, J., dissenting), 234 F.3d at 626-27 (Linn, J., dissenting);

234 F.3d at 636 (Newman, J., dissenting); (4) that it seriously disadvantages without notice the holders of the 1.2 million existing patents, 234 F.3d at 618-19 (Michel, J., dissenting); (5) that it turns on its head the time-honored practice of negotiation between the patent applicant and the PTO Examiner, 234 F.3d at 617-18 (Michel, J., dissenting), 234 F.3d at 628-29 (Linn, J., dissenting); (6) that it negatively impacts the "untold number of licensing agreements that are predicated on the assumption that patent claims are still entitled to a range of equivalents," 234 F.3d at 619 (Michel, J., dissenting); (7) that it does not account for after-arising technology, 234 F.3d at 620 (Rader, J., dissenting); and (8) that it will cripple research and development, 234 F.3d at 629 (Linn, J., dissenting), 234 F.3d at 638-41 (Newman, J., dissenting).

Even one of the concurrences speculated that the decision will have the undesirable, and clearly unintended, effect of generating even more protracted patent infringement litigation. 234 F.3d at 592-93 (Plager, J., concurring).

The concern over the decision is not limited to the Federal Circuit's confines. It is no exaggeration to say that the decision triggered immediate concern, comment, debate, and disagreement in the patent community. Of course, an *en banc* decision on a key issue is expected to draw attention from those affected. The difference here, however, is that the attention has not subsided, and the views expressed evidence agitation and division among seasoned patent law practitioners, judges, and educators. Among the commentary, drawn from a random sample:

- "Many defendants currently embroiled in patent litigation may feel as if they got an early Christmas present from the court. The decision means it will be much easier for competitors to avoid liability for patent infringement, and it may have the consequence of diminishing the value of the patents owned by many individuals and corporations." Richard A. Kaplan, *Competitors Find It Easier To Avoid Liability For Infringement*, 24 THE CHICAGO LAW. 3 (2001).
- "In *Graver Tank and Mfg. Co. v. Linde Air Products Co.*, the Supreme Court commented that without benefit of the doctrine of equivalents, the patent grant would be converted to a 'hollow and useless thing.' Many in the patent community regard *Festo* as the fulfillment of the Supreme Court's prediction." William M. Atkinson, Bruce J. Rose and John A. Wasleff, *Was Festo Really Necessary?*, 83 J. PAT. & TRADEMARK OFF. SOC'Y 111, 112 (2001) (footnotes omitted).
- *Festo* "has changed the landscape for patent applicants and patent litigants more dramatically than perhaps any case in recent history." Report of Committee No. 605, Intell. Prop. L. Section, A.B.A., 2000-2001 Annual Report (forthcoming 2001) (summarized in 61 PAT. TRADEMARK & COPYRIGHT J. (BNA) 1513 (2001)).
- "Prosecution history estoppel is a powerful argument in light of the Federal Circuit's recent decision in *Festo*, a decision that essentially stops the doctrine of equivalents in its tracks." *Control Res., Inc. v. Delta Elecs., Inc.*, 133 F. Supp. 2d 121, 134 (D. Mass. 2001).

- "Small wonder, then, that intellectual tension exists as the court of the future [the Federal Circuit] struggles to impose its vision and to shape the views of those [district] courts that rightly consider themselves the prime guardians of the most vital expression of direct democracy in America today—the jury of the people." *Id.* at 124-25.
- "[T]he Federal Circuit in *Festo* has materially retarded progress in the 'useful arts.' Whether the rule of *Festo* works permanent structural harm to the patent system or is corrected on *certiorari* is now in the hands of the Supreme Court." Janice M. Mueller, *Festo Presto! The Incredible Disappearing Doctrine of Equivalents*, 3 JMLS CENTER FOR INTELL. PROP. L. NEWS SOURCE 1 (2001), at 8.
- "[I]n reality, the Federal Circuit has put a serious nail in the coffin of the doctrine of equivalents. Not that it's the wrong thing to do." Neal M. Cohen, *The Rule O'Festo*, 19 IPL NEWSL. 2 (A.B.A.), Winter 2001.
- "The result of the Federal Circuit's decision to severely limit the availability of the doctrine of equivalents to patent holders is a major shift in this balance between the inventor protection and public notice functions of patents." W. David Wallace, *Life After Festo: Guarding Against Copyists*, INTELL. PROP. TODAY, Jan. 2001, at 8.

The raging debate in the patent community and beyond is an additional reason warranting that the petition be granted. The public must be assured that this Court will intervene where needed to assess a matter of central importance to patent protection and enforce-

ment, and, more broadly, to innovation and technological development in this country.

III. THIS COURT'S REVIEW IS NEEDED TO CONSIDER THE WISDOM OR FOLLY OF THE ABSOLUTE RULES LAID DOWN BY THE FEDERAL CIRCUIT

The one point that seems to raise little disagreement is that the Federal Circuit's decision, if left to stand, will profoundly impact patent law. Whether or not that is a good thing is where the turmoil begins. This Court's intervention is needed to lend authority and finality to the important issues embraced by the decision.

For example, this Court should consider what constitutes a "substantial reason related to patentability." Should it really be as far-reaching as declared by the Federal Circuit, so that even correction of a typographical error might provoke an estoppel? Should it be limited to arguments made to overcome prior art rejections? Should it also incorporate amendments made to satisfy 35 U.S.C. § 112 written description, enablement, and best mode requirements, no matter how minor the change? Can some latitude be accorded to changes made during prosecution, while still giving sufficient notice to the public of the patent's scope?

In addition, the Court should consider whether the copyist now has the advantage in litigation and, if so, whether that is desirable, or at least an unavoidable consequence of the need for predictability. The Court should further address whether, as some charge, absolute rules such as those laid down by the Federal Circuit are an abdication of judicial responsibility. Do they constitute unacceptable legislating by the judiciary?

More immediately, the Court needs to visit the question of the enormous and unforeseen impact on the 1.2 million unexpired patents and untold number of extant license agreements. Do the rigid rules laid down by the Federal Circuit unfairly compromise patents obtained at great expense and effort in a negotiation with a PTO Examiner who probably never imagined that his or her demand for a routine change to a claim would in the future foreclose application of the doctrine of equivalents?

The Federal Circuit's decision has raised more questions and concerns than it has answered. Even if this Court ultimately decides that it agrees with the decision, the gravity and breadth of the concerns generated by the decision warrant this Court's intervention.

At this juncture, it is unnecessary to decide how these questions and differences of opinion should be resolved. What is necessary is to recognize their existence, their importance, and the need for them to be immediately and conclusively resolved by this Court. If left to simmer without this Court's intervention, unhealthy fractures will persist in the Federal Circuit, patent practitioners will remain in a quandary as to appropriate patent prosecution practice, and the public's perception of the judiciary's ability to equitably enforce the patent laws will be seriously compromised.

CONCLUSION

The Amicus respectfully urges the Court to grant the petition.

Respectfully submitted,

JEROLD A. JACOVER, President
The Intellectual Property Law
Association of Chicago
Post Office Box 472
Chicago, Illinois 60609
(312) 987-1416

CYNTHIA A. HOMAN
(Counsel of Record)
Brinks Hofer Gilson & Lione
NBC Tower, Suite 3600
455 N. Cityfront Plaza Drive
Chicago, Illinois 60611
(312) 321-4223

Counsel for Amicus Curiae,
THE INTELLECTUAL PROPERTY
LAW ASSOCIATION OF CHICAGO

May 2001

No. 00-1543

(1)

Supreme Court, U.S.
FILED
MAY 9 2001
OFFICE OF THE CLERK

IN THE

Supreme Court of the United States

FESTO CORPORATION,
Petitioner,

v.

SHOKETSU KINZOKU KOGYO KABUSHIKI CO, LTD.,
A/K/A SMC CORPORATION AND SMC PNEUMATICS, INC.,
Respondents.

On Petition for Writ of Certiorari to the United States Court of Appeals for the Federal Circuit

BRIEF OF *AMICUS CURIAE* AMERICAN INTELLECTUAL PROPERTY LAW ASSOCIATION IN SUPPORT OF PETITIONERS

M. ANDREA RYAN, PRESIDENT
AMERICAN INTELLECTUAL PROPERTY LAW ASSOCIATION
2001 Jefferson Davis Highway
Arlington, VA 22202
(703) 415-0780

LAWRENCE M. SUNG
ASSISTANT PROFESSOR
NORTHWESTERN SCHOOL OF LAW OF LEWIS & CLARK COLLEGE
10015 S.W. Terwilliger
Portland, OR 97219
(503) 768-6870

JANICE M. MUELLER*
ASSOCIATE PROFESSOR
JOHN MARSHALL LAW SCHOOL
315 S. Plymouth Court
Chicago, IL 60604
(312) 427-2737

ROBERT B. SMITH
SKADDEN, ARPS, SLATE, MEAGHER & FLOM LLP
Four Times Square
New York, NY 10036
(212)735-3000

May 9, 2001

* Counsel of Record
Counsel for *Amicus Curiae*

25 pp

Page

TABLE OF CONTENTS

TABLE OF AUTHORITIES iii

STATEMENT OF INTEREST 1

CONSENT TO FILING
OF *AMICUS CURIAE* BRIEF 2

SUMMARY OF ARGUMENT 2

ARGUMENT 4

I. The "Complete Bar" Rule Announced By the Federal Circuit in *Festo* Fundamentally Conflicts With This Court's Doctrine of Equivalents Jurisprudence 4

II. The *Festo* "Complete Bar" Rule Will Adversely Affect All Persons Involved In The U.S. Patent System 7

A. *Festo* Encourages Imitation, Not Creativity 8

B. *Festo* Decreases the Licensing Value of Patented Technology 9

C. *Festo* Will Greatly Burden The U.S. Patent and Trademark Office 10

D. *Festo* Will Negatively Impact International Patenting 11

III. Retroactive Application of the *Festo* "Complete Bar" Rule Will Work a Substantial Injustice On Owners Of The 1.2 Million Extant U.S. Patents 13

CONCLUSION 18

Page

TABLE OF AUTHORITIES

FEDERAL CASES

Biovail Corp. Int'l v. Andrx Pharms., Inc.,
239 F.3d 1297 (Fed. Cir. 2001) 13, 15

Bouie v. City of Columbia,
378 U.S. 347 (1964) 14

Chevron Oil Co. v. Huson,
404 U.S. 97 (1971) 17, 18

Control Resources, Inc. v. Delta Elecs.,
133 F. Supp. 2d 121, 2001 U.S. Dist. LEXIS 4485
(D. Mass. 2001) 7

Davis v. Michigan Dep't of Treasury,
489 U.S. 803 (1989) 16

Festo Corp. v. Shoketsu Kinzoku Kogyo Kabushiki Co., Ltd., 234 F.3d 558
(Fed. Cir. 2000) (*en banc*) ..... *passim*

Graver Tank & Mfg. Co. v. Linde Air Prods. Co.,
339 U.S. 605 (1950) 6, 7, 8

Harper v. Department of Taxation,
509 U.S. 86 (1993) 16, 17

Insituform Techs., Inc. v. CAT Contracting, Inc.,
2001 U.S. App. LEXIS 4570
(Fed. Cir. Mar. 26, 2001) 15, 16

James B. Beam Distilling Co. v. Georgia,
501 U.S. 529 (1991) 16, 17

Litton Sys. v. Honeywell, Inc.,
238 F.3d 1376 (Fed. Cir. 2001) 13, 15

Lockheed Martin Corp. v. Space System/Loral, Inc.,
2001 U.S. App. LEXIS 7894 (Fed. Cir. 2001) 13, 15

Pioneer Magnetics v. Micro Linear Corp.,
238 F.3d 1341 (Fed. Cir. 2001) 13, 15

Reynoldsville Casket Co. v. Hyde,
514 U.S. 749 (1995) 17

Warner-Jenkinson Co. v. Hilton Davis Chem. Co.,
520 U.S. 17 (1997) ..... *passim*

Winans v. Denmead,
56 U.S. 330, 15 HOW 330,
14 L. Ed. 717 (1854) 16

CONSTITUTIONAL PROVISIONS

U.S. Constitution, Art. I, § 8, cl. 8 8

U.S. Constitution, Art. I, § 10 14

STATUTES AND RULES

35 U.S.C. § 112, ¶ 2 ..... 5, 12

35 U.S.C. § 261 9

U.S. Patent Act, 35 U.S.C. §§ 1-376 (2000) 3, 5

S. Ct. R. 37.2(a) 2

S. Ct. R. 37.6 1

Act Revising the Convention on the Grant of European Patents Art. 2(1) (Munich, 29 Nov. 2000) 12

TREATISES AND OTHER MATERIALS

William M. Atkinson et al., "Was *Festo* Really Necessary?," 83 *J. Pat. and Trademark Off. Soc'y* 111, 112 (Feb. 2001) 11

Neal M. Cohen, "The Rule O' Festo," 19 *ABA-IPL Newsletter* 12, 13 (2001) 11

General Agreement on Tariffs and Trade Uruguay Round Agreements, Agreement on Trade-Related Aspects of Intellectual Property Rights (TRIPS) (1994) 13

Joseph N. Hosteny, "Does *Festo* Change Patent Prosecution?," 8 *Intellectual Property Today* 44, 45 (May 2001) 11

Office of Inspector General, U.S. Department of Commerce, *Audit Report No. BTD-10628-8-0001: Patent and Trademark Office Board of Patent Appeals and Interferences* (Sept. 1998) 10

Lori Pressman, ed., *AUTM Licensing Survey: FY1999* (2000) 9

Herbert F. Schwartz, *Patent Law and Practice* 14-26 (Fed. Jud. Ctr. 2d ed. 1995) 10

United States Patent and Trademark Office, *USPTO Briefing Book for Patent Public Advisory Committee* (Feb. 28, 2001) 10-11

United States Patent and Trademark Office, *Manual of Patent Examining Procedure* § 706.03(d) (7th ed, Rev. 1) 12

World Intellectual Property Organization, *WIPO Industrial Property Statistics Publication A* 12

John A. Wasleff et al., *"Festo* Opens the Door," *Nat'l L.J.* (Feb. 5, 2001) 9

IN THE

Supreme Court of the United States

No. 00-1543

FESTO CORPORATION,
Petitioner,
v.
SHOKETSU KINZOKU KOGYO KABUSHIKI CO., LTD., A/K/A SMC CORPORATION AND SMC PNEUMATICS, INC.
Respondents.

On Petition for Writ of Certiorari to the United States Court of Appeals for the Federal Circuit

---

BRIEF OF *AMICUS CURIAE* AMERICAN INTELLECTUAL PROPERTY LAW ASSOCIATION IN SUPPORT OF PETITIONER

STATEMENT OF INTEREST[1]

The American Intellectual Property Law Association ("AIPLA") is a national association of more than 12,000 members, primarily attorneys engaged in representing

---

[1] Pursuant to Supreme Court Rule 37.6, *amicus curiae* states that this brief was not authored, in whole or in part, by counsel to a party, and that no monetary contribution to the preparation or submission of this brief was made by any person or entity other than the *amicus curiae* or its counsel.

intellectual property owners. The interests and practices of AIPLA members lie in the areas of patent, copyright, trademark, trade secret and other intellectual property law. Members of AIPLA are employed by private law firms, corporations, universities, research institutions, and government, and are engaged in the creation, licensing and transfer, and enforcement of intellectual property rights. Unlike many other areas of legal practice in which separate and distinct plaintiffs' and defendants' bars exist, most intellectual property attorneys represent both intellectual property owners and alleged infringers.

The AIPLA has no stake in either of the parties to this appeal or in the outcome of the appeal, other than its interest in seeking correct and consistent interpretation of the law affecting intellectual property.

CONSENT TO FILING OF *AMICUS CURIAE* BRIEF

In accordance with Supreme Court Rule 37.2(a), the AIPLA has obtained written consent to the filing of this *amicus curiae* brief from the counsel of record for both parties. The letters of consent have been filed with the Clerk of the Court.

SUMMARY OF ARGUMENT

The draconian new "complete bar" rule announced and retroactively applied by the Federal Circuit in *Festo Corp. v. Shoketsu Kinzoku Kogyo Kabushiki Co., Ltd.*, 234 F.3d 558 (Fed. Cir. 2000) (*en banc*) (hereafter *Festo*), results in the complete forfeiture of any scope of equivalents for

patent claim limitations that have been narrowed for any reason related to the Patent Act, 35 U.S.C. §§ 1-376 (2000). The *Festo* complete bar rule directly conflicts with this Court's most recent affirmation of the doctrine of equivalents, *Warner-Jenkinson Co. v. Hilton Davis Chem. Co.*, 520 U.S. 17 (1997), and with earlier Supreme Court decisions that have preserved some scope of equivalency despite the amendment of patent claims.

If left unchecked, the *Festo* complete bar rule will have drastic negative consequences on American innovators who rely on the U.S. patent system to protect their inventions. Incentives for innovation will shrink, existing patents will decline in value, and patent prosecution in the U.S. Patent and Trademark Office (USPTO) will become more lengthy, complex, and costly. Operations of the USPTO will suffer as a result.

Since announcing the new complete bar rule the Federal Circuit has applied it retroactively to patents obtained years before *Festo*, under a very different understanding of the consequences that could result from claim amendments. Retroactive application of the *Festo* complete bar works a substantial injustice on owners of the more than 1.2 million U.S. patents now in force.

The *Festo* court's newly created complete bar rule is an important issue that either has been, or should be, decided by this Court. For this reason, the AIPLA urges the Court to grant the petition for *certiorari*.

ARGUMENT

I. The "Complete Bar" Rule Announced By the Federal Circuit in *Festo* Fundamentally Conflicts With This Court's Doctrine of Equivalents Jurisprudence

This Court in *Warner-Jenkinson* flatly rejected a bright-line test proposed by the petitioner there that "any surrender of subject matter during patent prosecution, regardless of the reason for such surrender, precludes recapturing any part of that subject matter, even if it is equivalent to the matter expressly claimed." *Warner-Jenkinson*, 520 U.S. at 30, 32 (recognizing that this Court's "prior cases have consistently applied prosecution history estoppel only where claims have been amended for a limited set of reasons," and concluding that there is "no substantial cause for requiring a more rigid rule invoking an estoppel regardless of the reasons for a change.").

Yet the *Warner-Jenkinson* petitioner's rejected theory of complete estoppel is the very essence of the draconian "complete bar" rule announced and applied by the Federal Circuit in Part III of its *Festo* opinion:

> When a claim amendment creates prosecution history estoppel with respect to a claim element, there is no range of equivalents available for the amended claim element. Application of the doctrine of equivalents to the claim element is completely barred (a "complete bar").

Festo, 234 F.3d at 569.

The Federal Circuit's qualifier that the complete bar applies "when a claim amendment creates prosecution history estoppel" is in reality no qualification at all, because narrowing amendments made for *any* reason related to the U.S. Patent Act, 35 U.S.C. §§ 1-376, will trigger total estoppel with respect to the amended limitation. *See Festo*, 234 F.3d at 566. All equivalents to the amended limitation are forfeited, no matter whether the reason for amendment was to distinguish the prior art, the "typical[]" reason for amending claims, *Warner-Jenkinson*, 520 U.S. at 31, or merely to correct an innocuous indefiniteness of claim terminology to satisfy 35 U.S.C. § 112, ¶ 2 (requiring that patent claims "particularly point[] out and distinctly claim[] the subject matter which the applicant regards as his invention."). The *Festo* complete bar rule flatly contravenes this Court's unambiguous direction that "[w]here the reason for the change was not related to avoiding the prior art, the change . . . does not necessarily preclude infringement by equivalents of that element." *Warner-Jenkinson*, 520 U.S. at 33.

The Federal Circuit in *Festo* thus failed to heed this Court's sound recognition that there are "a variety" of reasons, not related to overcoming prior art, for which patent claims may be amended during the course of a patent application's pendency in the U.S. Patent and Trademark Office (USPTO). *Warner-Jenkinson*, 520 U.S. at 32. By expanding the estoppel net so drastically as to ensnare claim changes made for *any* reason related to the Patent Act, the Federal Circuit ignored this Court's well-founded concern that "[t]o change so substantially the rules of the game now could very well subvert the various balances the PTO sought to strike when issuing the numerous patents which have not

yet expired and which would be affected by our decision." *Id.*

Because the record in *Warner-Jenkinson* did not reveal the reason for the respondent's addition in the USPTO of a lower pH limit to his application claims, this Court remanded the case to the Federal Circuit for determination of "whether the reason for that addition could properly avoid an estoppel." *Id.* at 34. This Court's recognition that there *might* exist a viable reason that would avoid the imposition of prosecution history estoppel, and its instruction to the Federal Circuit that it must provide the patentee an opportunity to establish it, is plainly at odds with the *Festo* complete bar rule. Under *Festo*, if a claim is amended for "any reason which relates to the statutory requirements for a patent," *Festo,* 234 F.3d at 566, the reason for the amendment is irrelevant and no scope of equivalents remains as a matter of law. *See id.* at 576 (holding that complete bar applies where claims are narrowed, "whether the amendment is explained or unexplained. . .").

Rather than abide by this Court's narrowly-tailored, rebuttable presumption of prosecution history estoppel in the limited instance of a record that does not reveal the reason for an amendment, *see Warner-Jenkinson*, 520 U.S. at 33-34, the Federal Circuit in *Festo* vaulted to an across-the-board rigid rule of complete estoppel that refuses to consider any reason for the patent owner's claim changes. *See Festo*, 234 F.3d at 576. In the guise of creating a bright-line rule that purports to minimize uncertainty, the Federal Circuit facilitated the very evil that the doctrine of equivalents was designed to prevent: "plac[ing] the inventor at the mercy of verbalism and . . . subordinating substance to form." *Graver Tank & Mfg. Co. v. Linde Air Prods. Co.*, 339 U.S. 605, 607 (1950). In so

doing, the Federal Circuit jettisoned 18 years of its own precedent that had firmly established a flexible rule of estoppel, *see id.* at 612-15 (Michel, J., concurring-in-part and dissenting-in-part) (listing over 50 cases from 1983-2000 in which Federal Circuit applied flexible rule), and violated this Court's own legacy of doctrine of equivalents decisions that have preserved some scope of equivalents despite changes made to claims during the course of USPTO prosecution. *See id.* at 601-08 (Michel, J., concurring-in-part and dissenting-in-part) (discussing in detail eight such Supreme Court cases). In the words of one federal district court recently forced to apply it, the *Festo* complete bar rule "essentially stops the doctrine of equivalents in its tracks." *Control Resources, Inc. v. Delta Elecs.*, 133 F. Supp. 2d 121, __, 2001 U.S. Dist. LEXIS 4485, *36, *42 (D. Mass. 2001) (Young, C.J.) (criticizing *Festo* complete bar rule as "jarring in its bright-line, rigid approach, as well as in its apparent departure from established precedent").

Because the *Festo* complete bar rule fundamentally conflicts with this Court's doctrine of equivalents and prosecution history estoppel jurisprudence, this Court has already decided the issue presented in the petition. Even if not, however, the issue is an important one that should be decided by this Court.

II. The *Festo* "Complete Bar" Rule Will Adversely Affect All Persons Involved In The U.S. Patent System

The AIPLA believes that *Festo*'s complete bar rule significantly reduces the value of U.S. patents, both those already in force and those to be obtained hereafter. As a result, all persons involved in the U.S. patent system –

including inventors, investors, patent owners, patent licensees, members of the patent bar, and the USPTO – will bear the brunt of the Federal Circuit's abrupt departure from the reasonable flexible estoppel rule. The following examples demonstrate the havoc wreaked on the patent system by *Festo*'s complete bar rule.

A. *Festo* Encourages Imitation, Not Creativity

Perhaps most importantly, *Festo* diminishes incentives for innovation and thereby frustrates rather than promotes the goal of "Progress of . . . useful Arts." U.S. Constitution, Art. I, § 8, cl. 8. Handing a windfall to imitators, *Festo* maps a straightforward template for free-riding: by making any insubstantial change sufficient to avoid the literal boundary of narrowed claims, patented innovation can be imitated and exploited with ease. *See Graver Tank*, 339 U.S. at 607 (recognizing that "[o]utright and forthright duplication [should be] a dull and very rare type of infringement."). The *Festo* majority's contention that minimizing the doctrine of equivalents will promote innovation by encouraging design-arounds and improvements, *see Festo*, 234 F.3d at 577-78, may have some validity with respect to follow-on enterprises, but ignores the dramatic reduction in incentives that *Festo* represents for truly pioneer innovation and basic research. *Festo* slashes incentives for "break-through" invention because the scope of protection that the patent grant should provide has in many cases been substantially narrowed by Federal Circuit fiat.

B. *Festo* Decreases the Licensing Value of Patented Technology

Patents are personal property, *see* 35 U.S.C. § 261, and are often assigned or licensed. The licensing and transfer of patented technology is critical for all sectors of the U.S. technology community, but perhaps no more so than in the realm of innovation developed in American research universities and institutions. The most recent survey of the Association of University Technology Managers (AUTM) demonstrates that academic discoveries licensed to industry in fiscal year 1999 generated $40.9 billion in economic activity and supported 270,000 jobs. *See* Lori Pressman, ed., *AUTM Licensing Survey: FY1999* (2000) <http://www.autm.net/surveys/99/survey99A.pdf>, at FY 1999 Survey Summary 1. The *Festo* complete bar rule will adversely affect these and many other existing patent licenses. For example, a licensee may be able to alter its product or process just enough to stay outside the *Festo*-limited scope of the licensed patent's claims, and thus stop paying royalties to the patent owner. Alternatively, the threat that licensees may decide to exploit the diminished value of the patents under which they are licensed may force patent owners to renegotiate the terms of existing licenses. Transaction cost levels previously found acceptable will escalate, forcing a shift of scarce R&D resources away from innovation and towards legal maneuvering. *See generally* John A. Wasleff et al., "*Festo* Opens the Door," *Nat'l L.J.* (Feb. 5, 2001), at C1 (discussing *Festo*'s potential reduction of patent license value).

C. *Festo* Will Greatly Burden The U.S. Patent and Trademark Office

Festo will likely place a significantly heightened burden on already-taxed USPTO resources. Under *pre-Festo* law, patent prosecution in the USPTO was largely a straightforward back-and-forth negotiation between the patent applicant and the USPTO examiner. *See generally* Herbert F. Schwartz, *Patent Law and Practice* 14-26 (Fed. Jud. Ctr. 2d ed. 1995) (describing examination and prosecution procedures in USPTO). In many cases, applicants would compromise by making various claim amendments to satisfy USPTO examiners.

After *Festo,* such compromises will forfeit all equivalents to amended claim limitations. Patent prosecution will escalate in contentiousness as applicants are increasingly forced to contest rejections by refusing examiner-proffered amendments, filing more continuation applications, and taking more appeals to the USPTO Board of Patent Appeals and Interferences (BPAI), a body that is already severely backlogged. *See* Office of Inspector General, U.S. Department of Commerce, *Audit Report No. BTD-10628-8-0001: Patent and Trademark Office Board of Patent Appeals and Interferences* (Sept. 1998), at *i* (finding that number of pending appeal and interference cases grew by more than 350 percent in previous five years, and concluding that "appeal and interference pendency has increased, the effectiveness of the appeal process is threatened, and infringement on patents may occur during the delay"). The USPTO expects that *Festo* will have a "generally negative" effect on its operations as the difficulty of examining patent applications escalates and the pendency of those applications increases. *See USPTO*

Briefing Book for Patent Public Advisory Committee (Feb. 28, 2001), at 39-50 (predicting more examiner rejections for indefiniteness, new matter, and non-compliance with written description requirement; more applicant appeals to BPAI and Federal Circuit; more application filings; more examiner interviews; greater resistance to examiner amendments; more filing of continuation applications and reissue applications; and more requests for reexamination).

Escalating resource constraints for the USPTO will be matched by rising costs for the agency's users. As patent prosecution grows in complexity, innovators seeking patent protection will foot the bill for additional attorney time and USPTO fees. *See* Neal M. Cohen, "The Rule O' Festo," 19 *ABA-IPL Newsletter* 12, 13 (2001) (predicting that *Festo* will have "profound effect" on patent practitioners who will attempt to avoid making amendments by filing greater numbers of patent claims and continuing applications); William M. Atkinson et al., "Was *Festo* Really Necessary?," 83 *J. Pat. and Trademark Off. Soc'y* 111, 112 (Feb. 2001) (asserting that *Festo* will have "far-reaching implications" on process by which patents are obtained). Public disclosure of new innovation may well be stymied as inventors reject the patenting process altogether and opt for trade secret protection. *See* Joseph N. Hosteny, "Does *Festo* Change Patent Prosecution?," 8 *Intellectual Property Today* 44, 45 (May 2001).

D. *Festo* Will Negatively Impact International Patenting

The *Festo* complete bar rule will adversely affect many foreign-origin patent applications that are subsequently

filed in the U.S. *See generally* World Intellectual Property Organization, *WIPO Industrial Property Statistics Publication A* <http://www.wipo.org/ipstats/en/index.html>, at Table I (reporting that of the 294,706 patent applications received by the U.S. in calendar year 1999, 138,313 were filed by non-residents). Minor, syntax-related amendments to correct claims that were originally filed in the native language of an inventor's home country are commonplace; the USPTO requires such amendments. *See* United States Patent and Trademark Office, *Manual of Patent Examining Procedure* § 706.03(d) (7th ed, Rev. 1), at ¶ *7.34.07* (requiring rejection of claims that "appear to be a literal translation into English from a foreign document" because "generally narrative and indefinite" and "failing to conform with current U.S. practice"). Changes made to claim terminology in order to correct such deficiencies would be made in response to actual or anticipated rejections for claim indefiniteness under 35 U.S.C. § 112, ¶ 2. Because this is a reason related to the Patent Act, any such narrowed limitations would not be entitled to any scope of equivalents under *Festo*'s complete bar rule.

Similarly, the *Festo* complete bar rule may negatively implicate the international interests of U.S. patent owners. By severely diminishing the availability of the doctrine of equivalents, the *Festo* rule distances, rather than harmonizes, U.S. patent policy with that of the industrialized world. For example, the European Patent Convention is currently being revised to explicitly recognize that patent scope includes equivalents to subject matter literally claimed. *See Act Revising the Convention on the Grant of European Patents* Art. 2(1) (Munich, 29 Nov. 2000) (amending Protocol on the Interpretation of Article 69 EPC to require that "[f]or the

purpose of determining the extent of protection conferred by a European patent, due account shall be taken of any element which is equivalent to an element specified in the claims."). This disparity of protection does not bode well for U.S. interests in international negotiations over intellectual property laws. Foreign governments working to improve their patent protection and enforcement procedures in the name of harmonization and compliance with international patent norms, *see General Agreement on Tariffs and Trade Uruguay Round Agreements, Agreement on Trade-Related Aspects of Intellectual Property Rights (TRIPS)* (1994), will come to realize that after *Festo*, U.S. patent law now provides a much thinner scope of protection, and that the value of the U.S. patents owned by their citizens has been significantly diminished. Some foreign nations may well imitate this development by adopting similar rules to the detriment of U.S. industry obtaining patents in those nations.

III. Retroactive Application of the *Festo* "Complete Bar" Rule Will Work a Substantial Injustice On Owners Of The 1.2 Million Extant U.S. Patents

Since announcing the *Festo* complete bar rule, the Federal Circuit has applied it retroactively to patents that were sought and obtained many years before *Festo*. *See Lockheed Martin Corp. v. Space Sys./Loral, Inc.*, 2001 U.S. App. LEXIS 7894, *28-*33 (Fed. Cir. 2001) (applying complete bar rule to patent that issued in 1978); *Biovail Corp. Int'l v. Andrx Pharms., Inc.*, 239 F.3d 1297, 1303-04 (Fed. Cir. 2001) (applying complete bar rule to patent that issued in 1996); *Litton Sys. v. Honeywell, Inc.*, 238 F.3d 1376, 1380 (Fed. Cir. 2001) (applying complete bar rule to patent that was reissued in 1989); *Pioneer Magnetics v. Micro Linear Corp.*, 238 F.3d

1341, 1347-48 (Fed. Cir. 2001) (applying complete bar rule to patent that issued in 1987). This retroactive application of *Festo* does substantial injustice to owners of the approximately 1.2 million issued U.S. patents now in force, none of whom had any notice or opportunity for hearing before the Federal Circuit's imposition of the drastic consequences that now stem from patent prosecution decisions made years earlier under very different rules. *See Festo*, 234 F.3d at 618 (Michel, J., concurring-in-part and dissenting-in-part) (predicting that complete bar rule "will reduce the effective scope, and thus, the value, of most of the 1,200,000 patents that are unexpired and enforceable."); *cf. Bouie v. City of Columbia*, 378 U.S. 347, 353 (1964) (reversing on 14th Amendment Due Process grounds petitioners' criminal convictions that had been based on state Supreme Court's retroactive and expansive interpretation of criminal trespass statute, and explaining that "an unforeseeable judicial enlargement of a criminal statute, applied retroactively, operates precisely like an *ex post facto* law, such as Art. I, § 10, of the Constitution forbids.").

Both this Court's majority and concurring opinions in *Warner-Jenkinson* expressed sensitivity towards possible retroactive application of the limited "silent record" presumption of estoppel announced there, which is triggered only in the relatively rare instance when a prosecution history does not reflect any reason for a patent applicant's amendment of her claims. *See Warner-Jenkinson*, 520 U.S. at 32 n.6 (rejecting petitioner's proposed "brighter line" rule of complete estoppel in part because "[t]o change so substantially the rules of the game now could very well subvert the various balances the PTO sought to strike when issuing the numerous patents which have not yet expired and

which would be affected by our decision."); *id.* at 41-42 (Ginsburg, J., concurring) (adding "cautionary note" that "[t]he new presumption [of prosecution history estoppel in the limited instance of no explanation for an amendment], if applied woodenly, might in some instances unfairly discount the expectations of a patentee who had no notice at the time of patent prosecution that such a presumption would apply.").

As discussed in Part I *supra*, the Federal Circuit in *Festo* went far beyond this Court's narrowly-tailored "silent record" presumption of estoppel in *Warner-Jenkinson*; the Federal Circuit's new complete bar rule applies regardless of whether or not the patent applicant provided an explanation for its claim amendment. *See Festo*, 234 F.3d at 576. Despite this dramatic imposition of estoppel regardless of an applicant's explanation for amendment, the Federal Circuit did not hesitate to retroactively apply the new complete bar rule to the parties before it in *Festo*. *See id.* at 589 (application of bar to Stoll patent); *id.* at 591 (application of bar to Carroll patent). The Federal Circuit continues to apply the complete bar rule retroactively, as demonstrated by *Lockheed Martin*, *Biovail*, *Litton*, and *Pioneer Magnetics*, *supra*.

The only Federal Circuit decision to expressly address the law and applicability of retroactivity of the *Festo* complete bar rule is *Insituform Techs., Inc. v. CAT Contracting, Inc.*, 2001 U.S. App. LEXIS 4570 (Fed. Cir. Mar. 26, 2001) (non-precedential). Although the *Insituform* decision is curiously designated as non-precedential, it is at least instructive of the retroactivity views of some judges of the Federal Circuit. The *Insituform* opinion states:

> Since we applied the rule of law established in *Festo* to the parties in that case, *Festo*, 234 F.3d at 587-91, 56 USPQ2d at 1885-90, the holding in *Festo* "must be given full retroactive effect in all cases still open on direct review and as to all events, regardless of whether such events predate or postdate [the] announcement of the rule." *Harper v. [] Dep[artment] of Taxation*, 509 U.S. 86, 97 (1993). When a court has "applied a rule of law to the litigants in one case it must do so with respect to all others not barred by procedural requirements or res judicata." *James B. Beam Distilling Co. v. G[eorgia]*, 501 U.S. 529, 544 (1991).

Insituform, 2001 U.S. App. LEXIS at 4570, *13.

Despite the *Insituform* panel's reliance on this Court's decisions in *Harper* and *Beam*, those decisions do not compel retroactive application of the *Festo* complete bar rule by the Federal Circuit. First, *Harper* involved the retroactive application of this Court's earlier decision in *Davis v. Michigan Dep't of Treasury*, 489 U.S. 803 (1989), on a *constitutional* doctrine of intergovernmental tax immunity. *See Harper*, 509 U.S. at 89. *Festo* does not involve a constitutional doctrine but rather imposes entirely judge-made doctrines of patent law; *i.e.*, equivalents and prosecution history estoppel. *See Warner-Jenkinson*, 520 U.S. at 26 n.3 (recognizing that "this Court approved of the doctrine of equivalents in *Winans v. Denmead*, 56 U.S. 330, 15 HOW 330, 14 L. Ed. 717 (1854)."); *id.* at 39 n.8 (mentioning prosecution history estoppel as one of the "various legal

limitations on the application of the doctrine of equivalents . . .").

Second, *Harper* involved retroactive application of a new rule *by this Court*, not by a court of appeals as in *Festo*. *See Harper*, 509 U.S. at 89 (stating that "we hold that *this Court's* application of a rule of federal law to the parties *before the Court* requires every court to give retroactive effect to that decision.") (emphases added); *id.* at 97 (holding that "[w]hen *this Court* applies a rule of federal law to the parties before it, that rule is the controlling interpretation of federal law and must be given full retroactive effect in all cases still open on direct review and as to all events, regardless of whether such events predate or postdate *our announcement* of the rule.") (emphases added).

Lastly, to the extent that this Court's flexible retroactivity doctrine set forth in *Chevron Oil Co. v. Huson*, 404 U.S. 97 (1971), has continued vitality even after *Harper* and *Beam*, *see Reynoldsville Casket Co. v. Hyde*, 514 U.S. 749, 761-62 (1995) (Kennedy, J., concurring) (endorsing possibility of non-retroactive application of judicial decisions); *see also Harper*, 509 U.S. at 110-12 (Kennedy, J., concurring) (stating view that retroactivity in civil cases continues to be governed by standard announced in *Chevron*); *id.* at 113-36 (O'Connor, J., dissenting) (seeing no reason to abandon Court's traditional retroactivity analysis as articulated in *Chevron*), surely the *Festo* complete bar rule satisfies *Chevron*'s three-pronged test for non-retroactivity: (1) if left uncorrected by this Court, *Festo* has established a new rule of law as demonstrated in Part I, *supra*; (2) prospectivity would not undermine the purposes of the rule; and (3) retroactive application of *Festo* produces

substantial inequitable results, as demonstrated in Part II, *supra*. *See Chevron*, 404 U.S. at 106-07.

CONCLUSION

The Federal Circuit's sweeping imposition on all existing and future U.S. patents of an inflexible bar to the application of the doctrine of equivalents is an important issue that this Court has resolved or should resolve. The AIPLA accordingly urges this Court to grant the petition for *certiorari*.

Respectfully submitted,

M. Andrea Ryan, President
AMERICAN INTELLECTUAL
PROPERTY LAW ASSOCIATION
2001 Jefferson Davis Highway
Arlington, VA 22202
(703) 415-0780

May 9, 2001

Janice M. Mueller *
Associate Professor
John Marshall Law School
315 S. Plymouth Court
Chicago, IL 60604
(312) 427-2737

Robert B. Smith
Skadden, Arps, Slate,
Meagher & Flom LLP
Four Times Square
New York, NY 10036
(212) 735-3000

Lawrence M. Sung
Assistant Professor
Northwestern School of
Law of Lewis & Clark
College
10015 S.W. Terwilliger
Portland, OR 97219
(503) 768-6870

Counsel for Amicus Curiae
**Counsel of Record*

Supreme Court, U.S.
FILED
MAY 9 2001
OFFICE OF THE CLERK

(8)

No. 00-1543

In the Supreme Court of the United States

FESTO CORPORATION,

PETITIONER,

v.

SHOKETSU KONZOKU KOGYO KABUSHIKI CO., LTD., A/K/A SMC CORPORATION AND SMC PNEUMATICS, INC.,

RESPONDENTS.

On Petition for Writ of Certiorari to the United States Court of Appeals for the Federal Circuit

BRIEF OF AMICUS CURIAE FEDERAL CIRCUIT BAR ASSOCIATION IN SUPPORT OF PETITIONER

GEORGE E. HUTCHINSON
EXECUTIVE DIRECTOR,
FEDERAL CIRCUIT
BAR ASSOCIATION
1300 I Street, N.W.
Suite 700
Washington, D.C. 20005
(202) 408-4000

CLAIRE LAPORTE
(Counsel of Record)
MITCHELL J. MATORIN
ROBERT L. BOCCHINO JR.
MEGAN H. MACK
MARK A. REILLY
FOLEY, HOAG & ELIOT LLP
One Post Office Square
Boston, MA 02109
(617) 832-1000
Counsel for Amicus Curiae
Federal Circuit Bar Association

26 pp

TABLE OF CONTENTS

STATEMENT OF INTEREST OF *AMICUS CURIAE*.....1

SUMMARY OF THE ARGUMENT 2

ARGUMENT.....3

I. THE *FESTO* DECISION ANNOUNCED NEW RULES OF LAW THAT SIGNIFICANTLY EXPAND PROSECUTION HISTORY ESTOPPEL AND NARROW THE DOCTRINE OF EQUIVALENTS.....4

II. THE NEW RULES ANNOUNCED IN *FESTO* WILL HAVE PROFOUND EFFECTS ON PATENT PROSECUTION, PATENT LITIGATION, AND BUSINESS TRANSACTIONS. 8

A. By Discouraging Claim Amendments, the *Festo* Decision Limits One of the Public's Primary Resources for Ascertaining the Scope of the Claimed Invention.....8

B. *Festo* Creates a Dilemma for Investors Who Must Both Avoid Amendments and Avoid Drafting Claims Too Narrowly. 11

C. *Festo* Will Have a Negative Impact on the Conduct of Patent Litigation. 12

D. *Festo* Disrupts Investment-Backed Expectations Based Upon Prior Settled Law.....13

E. *Festo* May Increase the Cost of Patent Prosecution and May Discourage Inventors from Applying for Patents. 16

F. *Festo* May Increase the Burdens on the Patent and Trademark Office. 16

III. FESTO RAISES IMPORTANT QUESTIONS REGARDING APPELLATE DECISION-MAKING. 17

CONCLUSION 20

TABLE OF AUTHORITIES

Cases

ACLARA Biosciences, Inc. v. Caliper Techs. Corp., 125 F. Supp. 2d 391 (N.D. Cal. 2000) 13

Control Resources, Inc. v. Delta Elecs., Inc., 133 F. Supp. 2d 121 (D. Mass. 2001) 19

Elkay Mfg. Co. v. Ebco Mfg. Co., 192 F.3d 973 (Fed. Cir. 1999) 10

Festo Corp. v. Shoketsu Kinzoku Kogyo Kabushiki Co., 234 F.3d 558 (Fed. Cir. 2000) ..... passim

Flast v. Cohen, 392 U.S. 83 (1968) 18

Graco Children's Prods. Inc. v. Regalo Int'l LLC, No. 97-CV-6885, 2001 WL 392886 (E.D. Pa. Apr. 17, 2001) 13

Graver Tank & Mfg. Co. v. Linde Air Prods. Co., 339 U.S. 605 (1950) 1, 4, 14

Hughes Aircraft Co. v. United States, 140 F.3d 1470 (Fed. Cir. 1998) 6

Hughes Aircraft Co. v. United States, 717 F.2d 1351 (Fed. Cir. 1983) 6, 7

In re Morris, 127 F.3d 1048, 1054 (Fed. Cir. 1997) 9

Johnson & Johnston Assocs., Inc. v. R.E. Serv. Co., 238 F.3d 1347 (Fed. Cir. 2001) 17, 18

Kinzenbaw v. Deere & Co., 741 F.2d 383 (Fed. Cir. 1984) 6

Litton Sys., Inc. v. Honeywell, Inc., 238 F.3d 1376 (Fed. Cir. 2001) 14, 19

Markman v. Westview Instruments, Inc., 517 U.S. 370 (1996) 12

Pickholtz v. Rainbow Techs., Inc.,
125 F. Supp. 2d 1156 (N.D. Cal. 2000) 10, 19

Prodyne Enters., Inc. v. Julie Pomerantz, Inc.,
743 F.2d 1581 (Fed. Cir. 1984) 6

Sage Prods., Inc. v. Devon Indus., Inc.,
126 F.3d 1420 (Fed. Cir. 1997) 11, 12

Senior Techs., Inc. v. R.F. Techs., Inc.,
Nos. 00-1089, 00-1090, 2001 U.S. App.
LEXIS 4179 (Fed. Cir. Mar. 21, 2001) 19

Standard Oil Co. v. American Cyanamid Co.,
774 F.2d 448 (Fed. Cir. 1985) 10

Sun Studs, Inc. v. ATA Equip. Leasing, Inc.,
872 F.2d 978 (Fed. Cir.), *vacated in part on other grounds*, 11 U.S.P.Q.2d (BNA) 1479 (Fed. Cir. 1989) 6

United States v. Fruehauf,
365 U.S. 146 (1961) 18

Vitronics Corp. v. Conceptronic, Inc.,
90 F.3d 1576 (Fed. Cir. 1996) 9

Warner-Jenkinson Co. v. Hilton Davis Chem. Co.,
520 U.S. 17 (1997) 1, 3, 4, 14

Rules

Supreme Court Rule 10(c) 1, 3

Supreme Court Rule 37.2(a) 1

Supreme Court Rule 37.1 1

Supreme Court Rule 37.6 1

Constitution, Statutes, and Regulation

U.S. Const. art. I, § 8 3

28 U.S.C. § 1295(a)(4)(A) 17

35 U.S.C. § 101 4

35 U.S.C. § 102 4

35 U.S.C. § 103 4

35 U.S.C. § 112 4

35 U.S.C. § 154(b) 19

35 U.S.C. § 271 20

Patent Term Guarantee Act of 1999, Pub. L. No. 106-113,
§ 4402, 113 Stat. 1501A-557 19

Process Patent Amendments Act of 1988,
Pub. L. No. 100-418, § 9003, 102 Stat. 1563 20

Uruguay Round Agreements Act, Pub. L.
No. 103-465, § 533(a), 108 Stat. 4988 (1994) 20

37 C.F.R. § 1.191(a) (2000) 17

Other Authorities

William M. Atkinson et al., *Was* Festo *Really Necessary?*,
83 J. Pat. & Trademark Off. Soc'y 111
(Feb. 2001) 7

Cases and Recent Developments, 10 Fed. Circuit B.J.
397, 419 (2000) 3

Lester Horwitz & Ethan Horwitz, *Intellectual Property Counseling & Litigation*, § 2.07[6] (2000) 10-11

Alex Porat, *Federal Circuit Narrows Scope of Patents: Design-Arounds Just Got Easier*, E-Commerce,
Dec. 2000, at 5 ..... 9, 15

Kevin A. Wolff et al., *The Unspoken Loss in Shareholder Value: Patent Rights Take A Hit*, Mealey's Litigation
Report: Patents, Apr. 2, 2001 ..... 9, 10, 14, 15, 16, 17

STATEMENT OF INTEREST OF *AMICUS CURIAE*

The Federal Circuit Bar Association ("FCBA") is a national organization comprising approximately 2,400 attorneys whose practice concerns the United States Court of Appeals for the Federal Circuit in all aspects of its jurisdiction. The FCBA offers a forum for common concerns and dialogue between the bar and the judges of the Federal Circuit. One of the purposes of the FCBA is to offer assistance and advice to the federal courts, including briefs *amicus curiae*, on matters affecting practice before the Federal Circuit and lower tribunals.[1]

Pursuant to Supreme Court Rule 37.2(a), the FCBA has conferred with the parties regarding the filing of this brief *amicus curiae*, and both parties have consented to its filing. Evidence of the written consent of the parties has been filed separately herewith.

The FCBA respectfully submits this brief in support of the petition for certiorari filed by Petitioner Festo Corporation.[2] Specifically, the FCBA seeks to provide a practitioners'-eye view of the impact of the Federal Circuit's decision in *Festo Corp. v. Shoketsu Kinzoku Kogyo Kabushiki Co.*, 234 F.3d 558 (Fed. Cir. 2000) ("*Festo*") on

---

[1] Pursuant to Supreme Court Rule 37.6, the FCBA states that no counsel for a party authored this brief in whole or in part. No person or entity, other than the *amicus curiae*, its members, or its counsel, made any monetary contribution to the preparation or submission of the brief.

[2] Pursuant to Supreme Court Rule 37.1, the FCBA refrains from reiterating the points argued by Petitioner. In particular, the FCBA does not analyze the conflict between the *Festo* decision and the prior rulings of this Court, except insofar as such conflict is relevant to the decision's impact on patent practitioners. *See, e.g., Warner-Jenkinson Co. v. Hilton Davis Chem. Co.*, 520 U.S. 17, 30-33 (1997); *Graver Tank & Mfg. Co. v. Linde Air Prods. Co.*, 339 U.S. 605, 609 (1950). The FCBA agrees with petitioner that *Festo* cannot be reconciled with this Court's prior cases, and the petition should be granted on that ground as well as on the grounds advanced below. Sup. Ct. R. 10(c).

those involved in the prosecution, litigation, and licensing of patent rights, and on the patent system as a whole.

SUMMARY OF THE ARGUMENT

1. The Supreme Court should grant the petition for certiorari because in *Festo* the Federal Circuit announced major changes in federal patent law relating to the doctrine of equivalents and prosecution history estoppel. The new rules enunciated in *Festo* have significantly changed prior law and have overturned numerous cases on which patentees, patent practitioners, and others had relied.

2. The new rules announced by the Federal Circuit in *Festo* will have profound effects on the prosecution, enforcement, and licensing of patents. The Federal Circuit limited the availability of the doctrine of equivalents in order to create more certainty regarding the scope of patent protection. However, *Festo* may have the unintended effect of discouraging practices, such as claim amendments, that shed light on the meaning of patent claims. The practices encouraged by *Festo* may also increase the costs of patent prosecution and litigation. In addition, the changes in *Festo* have diminished the rights of patent holders.

3. In *Festo*, the Federal Circuit solicited briefing by the parties and *amici* on several broad questions not raised by the parties, and it then enunciated several new rules of law in response to those questions. This procedure raises questions regarding the Federal Circuit's appellate decision-making process, particularly because the court announced the new rules *en banc*. Litigants and the lower federal courts are thus likely to treat the new rules as controlling, even when those courts are asked to apply them in factual circumstances that differ from the facts in this case. The Court should grant the petition so that it can address the propriety of the Federal Circuit's procedure.

ARGUMENT

This Court should grant certiorari pursuant to Supreme Court Rule 10(c) because the Federal Circuit in *Festo* decided several important questions of federal law that should be settled by this Court. We respectfully submit that the decision below represents a departure from settled precedents long followed by lower courts and tribunals and relied upon by patent prosecutors and litigators. *See, e.g., Cases and Recent Developments*, 10 Fed. Circuit B.J. 397, 419 (2000) ("There are very few opinions in Federal Circuit jurisprudence that so dramatically and suddenly alter the course of the law."). The *Festo* decision resolved several general questions in a manner that will alter the investment-backed expectations of patentees and will force a revision, with many unforeseen consequences, in the way the patent bar practices its craft.

The FCBA is conscious of this Court's reliance on the Federal Circuit for the day-to-day development and administration of patent law. *See, e.g., Warner-Jenkinson Co. v. Hilton Davis Chem. Co.*, 520 U.S. 17, 40 (1997). However, we believe that review of the *Festo* decision by this Court is appropriate, because the Federal Circuit has gone beyond the ordinary administration and development of patent law. Rather than refining the doctrine of equivalents in the "orderly course of case-by-case determinations," *id.*, the *en banc* court in *Festo* fundamentally changed the doctrine in a way that may undermine the careful balance between public disclosure of inventions and the limited exclusivity guaranteed by Article 1, Section 8 of the Constitution.

I. THE *FESTO* DECISION ANNOUNCED NEW RULES OF LAW THAT SIGNIFICANTLY EXPAND PROSECUTION HISTORY ESTOPPEL AND NARROW THE DOCTRINE OF EQUIVALENTS.

The *Festo* decision has wrought a fundamental change in the interaction between two related and important rules of patent law: the doctrine of equivalents and prosecution history estoppel. The doctrine of equivalents grants the patentee a degree of protection beyond the literal claims of the patent to ensure that "unscrupulous copyist[s]" cannot make "unimportant and insubstantial changes in the patent which, though adding nothing, would be enough to take the copied matter outside the claim." *Graver Tank & Mfg. Co. v. Linde Air Prods. Co.*, 339 U.S. 605, 607-08 (1950). Prosecution history estoppel, on the other hand, ensures that the patentee cannot, through the doctrine of equivalents, claim subject matter that he has in fact disclaimed during prosecution of the patent. Prosecution history estoppel applies to claims that have been amended during prosecution for a "substantial reason related to patentability." *Warner-Jenkinson*, 520 U.S. at 33.

In *Festo*, the court expanded the doctrine of prosecution history estoppel and narrowed the doctrine of equivalents by announcing, in relevant part, the following new rules of law:

1. In determining what is a "substantial reason related to patentability," the term "patentability" is not limited to overcoming prior art under 35 U.S.C. §§ 102 and 103, but includes amendments required under § 101 (requirement of patentable subject matter) and § 112 (requirement of specification). *Festo*, 234 F.3d at 566.
2. An amendment made voluntarily by a patentee, and not required by the examiner, creates prosecution history estoppel just as a required amendment does. *Festo*, 234 F.3d at 568.
3. If a claim amendment creates prosecution history estoppel, then no range of equivalents is available for the amended claim element – i.e., prosecution history estoppel operates as a "complete bar" to infringement by equivalents. *Festo*, 234 F.3d at 569.

The first and second rules set forth above, while not clearly contrary to prior law, underscore the *Festo* court's expansion of prosecution history estoppel and the concomitant narrowing of the doctrine of equivalents. In particular, the first rule (that prosecution history estoppel may arise from amendments for purposes other than distinguishing prior art) is a departure from established practice. Before *Festo*, practitioners tended to focus on amendments and arguments based on prior art rejections as the basis for determining whether the patentee would be estopped from asserting equivalents against an accused product or process. After *Festo*, accused infringers will rely on prosecution history estoppel far more in other contexts (for example, an amendment to clarify claim language) where historically the doctrine was not often applied.

The third rule announced in *Festo* (that prosecution history estoppel functions as a "complete bar" to the doctrine of equivalents) departs from almost all of the pre-*Festo* cases in a way that significantly limits the availability of the doctrine of equivalents. Prior to *Festo*, all but two Federal Circuit cases addressing the issue had held that prosecution history estoppel bars infringement of the amended claim by some equivalents but not by others. To determine whether prosecution history estoppel barred a particular use of the doctrine of equivalents, the court would look at facts such as the nature and purpose of the amendment; the patentee's own statements about what was disclaimed in the amendment; the relationship between the original claim, the amended claim, and the accused product; and (if the amendment had been

made to avoid prior art) the relationship between the accused product, the invention, and the prior art. *See, e.g., Hughes Aircraft Co. v. United States*, 140 F.3d 1470, 1476 (Fed. Cir. 1998) (in applying the doctrine, "a court must determine what subject matter the patentee actually surrendered"); *Sun Studs, Inc. v. ATA Equip. Leasing, Inc.*, 872 F.2d 978, 987 (Fed. Cir.) ("The scope of estoppel must be determined in light of the prior art that occasioned the change, as well as representations made to the patent examiner as to the reason for the change."), *vacated in part on other grounds*, 11 U.S.P.Q.2d (BNA) 1479 (Fed. Cir. 1989). Under this approach, which the *Festo* court termed the "flexible bar" rule, *Festo*, 234 F.3d at 572, the limiting effect of prosecution history estoppel was "within a spectrum ranging from great to small to zero," *Hughes Aircraft Co. v. United States*, 717 F.2d 1351, 1363 (Fed. Cir. 1983), and where it lay in that spectrum depended on the specific facts and circumstances of the case.[3]

Deciding that the flexible bar approach had become "unworkable," the *Festo* court rejected this approach in favor of a "complete bar" that arises whenever "an amendment has narrowed the scope of a claim for a reason related to patentability."[4] *Id.* at 574-75. That is, a patentee may no longer assert infringement by equivalents of a claim element that has been added for patentability reasons, regardless of the relationship between the accused product, the invention, and the prior art; the purpose of the amendment; or the scope of what the patentee has actually disclaimed.

The significance of this change is illustrated by the Federal Circuit's 1983 holding in *Hughes Aircraft*, 717 F.2d at 1351, one of many pre-*Festo* Federal Circuit decisions that relied on the flexible bar rule and have been overruled either expressly or *sub silentio*, or cast into doubt, by *Festo*.[5] In *Hughes Aircraft*, the invention at issue was a satellite capable of maintaining its position while orbiting the earth. 717 F.2d at 1352. The claimed satellite and the infringing satellite were identical in every material way save one: in the patented invention, signals from the satellite were transmitted to earth, where calculations used to determine satellite position were made by a ground crew; in the accused satellite, signals were transmitted to a computer on board the satellite that performed the calculations. *Id.* at 1360-61, 1364. Because the distinction was insubstantial, the court concluded that the accused satellite infringed under the doctrine of equivalents. *Id.* at 1366. Although the patentee had amended the claims to distinguish prior art, the court ruled that prosecution history estoppel did not apply because the infringing device did not fit within the subject matter surrendered during prosecution. *Id.* at 1362.

The outcome would have been different under *Festo*. Rather than identifying what subject matter was actually disclaimed during prosecution and comparing that disclaimed subject matter with the allegedly infringing device, a post-*Festo* court would ask only (1) whether the

---

[3] The two pre-*Festo* cases cited by the *Festo* majority as inconsistent with this approach are *Kinzenbaw v. Deere & Co.*, 741 F.2d 383 (Fed. Cir. 1984) and *Prodyne Enterprises, Inc. v. Julie Pomerantz, Inc.*, 743 F.2d 1581 (Fed. Cir. 1984). In fact, while these decisions contain language that is in tension with the flexible bar rule, the holdings even of these cases are arguably consistent with the flexible bar. *See Festo*, 234 F.2d at 610 (Michel, J., concurring in part and dissenting in part).

[4] The court concluded that the flexible bar rule was unworkable because, by creating uncertainty as to which equivalents are available and which are not, it impaired the "notice function" of patent claims – i.e., the role of patent claims in specifying exactly what the patentee has claimed and what is available to others. *See Festo*, 234 F.3d at 574-78. As discussed below, the *Festo* "complete bar" rule may itself impair the notice function. *See Festo*, 234 F.3d at 593 (Plager, J., concurring) (noting that "[i]n time . . . the supposed benefits of the doctrinal improvements contained in [*Festo*] may prove illusory").

[5] *See Festo*, 234 F.3d at 613-615 (Michel, J., concurring in part and dissenting in part); *see also* William M. Atkinson et al., *Was* Festo *Really Necessary?*, 83 J. Pat. & Trademark Off. Soc'y 111, 143-50 (Feb. 2001).

claim limitation was narrowed and (2) whether it was narrowed for a substantial reason related to patentability. Because the answers to these two questions were affirmative in *Hughes Aircraft*, the patentee would have been left without a remedy.

II. THE NEW RULES ANNOUNCED IN *FESTO* WILL HAVE PROFOUND EFFECTS ON PATENT PROSECUTION, PATENT LITIGATION, AND BUSINESS TRANSACTIONS.

A. By Discouraging Claim Amendments, the *Festo* Decision Limits One of the Public's Primary Resources for Ascertaining the Scope of the Claimed Invention.

The primary reason advanced by the Federal Circuit for abandoning the flexible bar approach to prosecution history estoppel was to increase certainty regarding the scope of available equivalents. *See Festo*, 234 F.3d at 574-78. A patent's prosecution history record, however, is important not only to determine the scope of available equivalents, but also to ascertain the scope and meaning of the claims for literal infringement analysis. Indeed, the principal way in which prosecution histories serve the public notice function is by clarifying the literal scope of claims. As discussed below, the disincentives that *Festo* creates to amend claims during prosecution will encourage "stealth" prosecution tactics, the effect of which will be to reduce the value of prosecution history in elucidating the meaning of patent claims. Further, the detrimental effect of such tactics may outweigh the benefit of any increased certainty that the *Festo* rule provides. Thus, the FCBA respectfully disagrees with the Federal Circuit's conclusion that the complete bar "best serves the notice and definitional function of patent claims." *Festo*, 234 F.3d at 576.

Before *Festo*, patent counsel often drafted claims broadly in anticipation of narrowing them by amendment, if necessary, during the course of prosecution. *See* Kevin A. Wolff et al., *The Unspoken Loss in Shareholder Value: Patent Rights Take A Hit*, Mealey's Litigation Report: Patents, Apr. 2, 2001, at 29-30 (explaining that patent practitioners prior to *Festo* typically drafted initial claims broadly); Alex Porat, *Federal Circuit Narrows Scope of Patents: Design-Arounds Just Got Easier*, E-Commerce, Dec. 2000, at 5. The patent examiner usually rejected broadly worded initial claims as anticipated or obvious in view of the prior art, or unpatentable on other statutory grounds. The applicant then amended the claims, explained the invention, distinguished the prior art, or pursued some combination of these approaches to overcome the rejection. *See In re Morris*, 127 F.3d 1048, 1054 (Fed. Cir. 1997) ("The process of patent prosecution is an interactive one. Once the PTO has made an initial determination that specified claims are not patentable . . . the burden of production falls upon the applicant to establish entitlement to a patent.").

This give and take between patent applicants and patent examiners is one of the great virtues of our patent system. The process of claim amendment usually forces applicants to commit themselves – at least to some extent – to constructions of their claims and interpretations of the prior art. Claim amendments create a public record in which the scope of an invention is clarified and defined. *See, e.g., Vitronics Corp. v. Conceptronic, Inc.*, 90 F.3d 1576, 1583 (Fed. Cir. 1996); *see also In re Morris*, 127 F.3d at 1054 ("This [negotiation between applicant and examiner] promotes the development of the written record before the PTO that provides the requisite written notice to the public as to what the applicant claims as the invention.").

Because of the high price that *Festo* places on most amendments – complete loss of the doctrine of equivalents –

post-*Festo* applicants will probably abandon the approach of filing broad claims initially. Instead, inventors will take pains to avoid amendments by drafting narrow claims that are likely to be allowed without amendment, thereby depriving the public of the dialogue with the examiner discussed above. *See* Wolff, *supra*, at 31.

The *Festo* decision will also discourage inventors from clarifying claim language through voluntary amendments. "Clarifying" amendments are likely to give rise to prosecution history estoppel under *Festo*, because they implicate the requirements of 35 U.S.C. § 112. *See Festo*, 234 F.3d at 567; *Pickholtz v. Rainbow Techs., Inc.*, 125 F. Supp. 2d 1156, 1162 (N.D. Cal. 2000) (statement that amendment was "for clarification" constituted admission that it was related to patentability under § 112, paragraph 2). Thus, patent prosecutors will tend to avoid submitting clarifying amendments that would increase the intelligibility of the claims to the public.

Festo will also encourage applicants to seek interviews with the examiner either before or immediately after the first office action in the hope of having claims allowed without amendment and without submitting written remarks of the type that have also been held to create an estoppel.[6] The file history of a patent prosecuted in this way is unlikely to be illuminating as to the meaning or scope of claims, as examiners' notes of interviews with applicants are generally brief, and the real substance of the interview will remain inaccessible to the public. *See* Lester Horwitz & Ethan

[6] *See, e.g., Elkay Mfg. Co. v. Ebco Mfg. Co.*, 192 F.3d 973, 979 (Fed. Cir. 1999) ("Arguments made during the prosecution of a patent application are given the same weight as claim amendments."); *Standard Oil Co. v. American Cyanamid Co.*, 774 F.2d 448, 452 (Fed. Cir. 1985) ("[The prosecution history includes] all express representations made by or on behalf of the applicant to the examiner to induce a patent grant. . . . Such representations include amendments to the claims and arguments made to convince the examiner . . . .").

Horwitz, *Intellectual Property Counseling & Litigation*, § 2.07[6] (2000) ("[An] advantage of examiner interviews is that they usually produce little if any written record. . . . [T]he examiner complete[s] an Interview Summary Record Form PTOL-413 [that] usually includes a sketchy one or two line summary of what was discussed. . . . [T]he sketchy disclosure of the examiner interview summary is unlikely to furnish a basis for file wrapper estoppel arguments.").

Applicants will similarly be inclined to contest examiners' rejections instead of amending claims in response to rejections. File histories in which amendments are rigorously avoided are less likely to provide guidance to the public and to competitors as to the meaning and scope of claims. All of these effects will impair the beneficial public notice function traditionally served by patent prosecution.

B. *Festo* Creates a Dilemma for Inventors Who Must Both Avoid Amendments and Avoid Drafting Claims Too Narrowly.

Although inventors will now face severe consequences if they narrow their claims during prosecution, they cannot respond to *Festo* simply by drafting very narrow claims. If they do, they may find that they have no access to equivalents under other Federal Circuit cases. In *Sage Products, Inc. v. Devon Industries, Inc.*, 126 F.3d 1420 (Fed. Cir. 1997), the Federal Circuit held that patentees who have failed to claim foreseeable alternatives will be held to the limited scope of their claims and cannot reach unclaimed alternatives under the doctrine of equivalents. *See id.* at 1424-26 (finding noninfringement under doctrine of equivalents where patentee could have sought "broad patent protection"; patentee "must bear the cost of its failure to seek protection for this foreseeable alteration of its claimed structure").

Thus, "for a patentee who has claimed an invention narrowly, there may not be infringement under the doctrine

of equivalents in many cases, even though the patentee might have been able to claim more broadly." *Id.* at 1424. Read together, therefore, *Festo* and *Sage Products* create a dilemma: an inventor who successfully avoids the Scylla of *Festo* may encounter the Charybdis of *Sage Products*.

C. *Festo* Will Have a Negative Impact on the Conduct of Patent Litigation.

The consequences of *Festo* for patent litigation are no less significant than its impact upon patent prosecution. Claim amendments have been particularly important in patent litigation, where they have assisted courts and litigants in construing the literal meaning of claims under this Court's decision in *Markman v. Westview Instruments, Inc.*, 517 U.S. 370 (1996). Through the doctrine of prosecution history estoppel, claim amendments have also prevented patentees from claiming infringement for ideas that were clearly surrendered during the application process. In both cases, the amendments were read in context within the prosecution history in order to discern their meaning.

By contrast, in the wake of *Festo*, there are likely to be fewer claim amendments to provide information about the literal scope of claims. Ultimately, having less informative prosecution histories may add to the difficulty, expense, and uncertainty of litigation. Patent litigation – already a lengthy and expensive undertaking – will only become more so if applicants succeed in minimizing amendments and other written interactions with examiners.

Where there are amendments, litigants who dispute the applicability of the doctrine of equivalents will no longer focus on the negotiation between an applicant and an examiner as a narrative that informs the outer contours of available equivalents. Instead, they will concern themselves with collateral questions such as whether a particular amendment is a "narrowing" amendment, or what precisely constitutes an "element" of a claim as to which prosecution

history estoppel applies. *See Festo*, 234 F.3d at 569 ("When a claim amendment creates prosecution history estoppel with regard to *a claim element*, there is no range of equivalents available for the amended claim element.") (emphasis supplied).

In *ACLARA Biosciences, Inc. v. Caliper Techs. Corp.*, 125 F. Supp. 2d 391, 400-03 (N.D. Cal. 2000), for example, the court addressed the meaning of the term "element" in attempting to determine whether prosecution history estoppel should apply. Breaking down one clause or "element" into three separate components, or "limitations," the court concluded that there was no estoppel. *Id.* at 402-03. *See also Graco Children's Prods., Inc. v. Regalo Int'l LLC*, No 97-CV-6885, 2001 WL 392886, at *4 (E.D. Pa. Apr. 17, 2001). Under pre-*Festo* law, these courts would have engaged in a genuine examination of what the patentee had surrendered during prosecution. In view of *Festo*, however, the *ACLARA* court instead concerned itself with the question of how to define an "element," while the *Graco* court focused on whether a particular amendment was "narrowing."

D. *Festo* Disrupts Investment-Backed Expectations Based Upon Prior Settled Law.

The potential effects of *Festo* on the patents prosecuted under the old rules are extensive. Amendments have long been such an established part of the prosecution process that, as Judge Newman observed, a mere ten to fifteen percent of simple patents make it through the process without amendments, while the number of complex applications that escape amendment is "vanishingly small." *Festo*, 234 F.3d at 638 n.21 (Newman, J., concurring in part, dissenting in part). Judge Michel estimated in his *Festo* dissent that the decision will affect the scope of most of the approximately 1.2 million unexpired and enforceable patents. *Id.* at 618 (Michel, J., concurring in part, dissenting in part). The

expanded doctrine of prosecution history estoppel announced in *Festo* appears to weaken the rights of those existing patentees. *See Festo*, 234 F.3d at 638 (Newman, J., concurring in part, dissenting in part); *see also Litton Sys., Inc. v. Honeywell, Inc.*, 238 F.3d 1376 (Fed. Cir. 2001); Wolff, *supra*, at 31 ("The recent decision in *Litton* . . . bears witness to the sudden change in the value of patents that has resulted from *Festo*.").

By expanding the types of claim amendments that trigger prosecution history estoppel and simultaneously treating any such amendments as an absolute bar to infringement by equivalents, the *Festo* court has eliminated the doctrine of equivalents as a viable source of protection for many existing patents. As a result, the rights of existing patentees in amended claims risk becoming precisely what this Court has stated they should not be: a "hollow and useless thing." *Graver Tank*, 339 U.S. at 607. This Court in *Warner-Jenkinson* expressly rejected such substantial mid-course changes to patent law as unfairly disruptive of established expectations:

> To change so substantially the rules of the game now could very well subvert the various balances the PTO sought to strike when issuing the numerous patents which have not yet expired and which would be affected by our decision.

520 U.S. at 32 n.6.

If upheld, the bright-line rule announced in *Festo* is likely to provide a windfall to the competitors of existing patentees. Simply by reviewing a patent's prosecution history, competitors will be able to determine the claim elements for which there will be no range of equivalents. They will not be put to the trouble of determining the scope of what has been disclaimed by an amendment. If any claim element has been narrowed for a reason relating to patentability, a competitor need only identify that element

and introduce an insubstantial change to it without fear of infringement liability. *Festo*, 234 F.3d at 616 (Michel, J., concurring in part, dissenting in part) (*Festo* "provides copyists a fail-safe method to avoid liability for infringement").

Moreover, "any claim drafted in current technological terms [can] easily be circumvented after the advent of an advance in technology." *Festo*, 234 F.3d at 619 (Rader, J., concurring in part, dissenting in part). Before *Festo*, such technological advances were accounted for, at least to a degree, by the doctrine of equivalents. Post-*Festo*, technological advances may provide loopholes to infringers. The *Festo* decision, in the short term, is likely to provide incentives to competitors to copy rather than innovate, thus reducing the incentives provided by the patent system for investing in research and development. *See* Porat, *supra*, at 5.

Festo will also upset business decisions made in reliance on prior patent practice. Patentees that have relinquished trade secret protection in their inventions in exchange for patent protection may come to regret their decisions. Businesses that have decided whether to develop particular products or license certain patents by weighing the opportunities against the risk of infringement liability may find their decisions undermined. Business decisions such as these are backed by significant investments, the value of which has abruptly been altered by *Festo*. *See* Wolff, *supra*, at 31. The sudden weakening of existing patents is particularly troubling for companies and industries built around the value of their patent portfolios. In such industries, public and private investors have made significant decisions in reliance on the value of patents that were prosecuted according to prior practice and may now be significantly diminished in scope.

E. *Festo* May Increase the Cost of Patent Prosecution and May Discourage Inventors From Applying for Patents.

The price that *Festo* places on amending patent claims will increase the up-front cost of patent prosecution. *Festo* raises the standard of practice for patent prosecutors, requiring that they do more extensive research into the prior art before filing an application in an effort to turn up prior art that might later require them to amend their claims. Patent prosecutors will similarly be burdened by the need to devote much greater effort at the stage of the initial application in drafting the claims and claim elements in a manner most likely to avoid the need to amend. *See* Wolff, *supra*, at 34-36 (referring to this approach as the "Robust Status Quo" response to *Festo*). The additional care (and additional claims) required in light of *Festo* may raise the cost of patent protection to a point where it becomes less available to individual inventors and small businesses. This result, in turn, will diminish the effectiveness of the patent system as a spur towards invention.

Another effect of increased patent costs may be to encourage inventors to protect their inventions as trade secrets, rather than disclose them to the public in exchange for (weakened) patent protection. This result would be contrary to the patent system's objective of encouraging the disclosure of inventions.

F. *Festo* May Increase the Burdens on the Patent and Trademark Office.

Festo may also increase the burdens on the PTO and, ultimately, the Federal Circuit. Applicants disappointed by an examiner's rejection of claims will have an incentive to appeal the refusal through the administrative and legal

process instead of simply amending their claims.[7] Such appeals threaten to add substantial delays to an already deliberate process and increase the costs of prosecution not only for patentees, but for the public. These additional costs may favor large companies with substantial resources over smaller companies and individual inventors.

One commentator has noted that patentees facing the prospect of a claim amendment may choose a "slash and burn" approach, canceling all claims of the application and replacing them with a completely new set of claims. *See* Wolff, *supra*, at 36-37. This approach could successfully fend off the danger of prosecution history estoppel presented by *Festo*, because "canceling all the claims and offering a complete new set of claims will frustrate [the] mapping of claim elements and make it difficult to determine if the claims have been narrowed." *Id.* Such an approach to patent prosecution hardly serves the public interest. It increases the burden on patent examiners and may also increase the duration of the patent prosecution process.

III. *FESTO* RAISES IMPORTANT QUESTIONS REGARDING APPELLATE DECISION-MAKING.

Finally, the Federal Circuit's procedure of soliciting briefing on certain abstract legal questions and then answering them, *en banc*, separately from its analysis of the facts of the dispute at hand, raises questions regarding the court's approach to appellate decision-making.[8] As this

---

[7] Rejection of claims by patent examiners can be appealed as of right to the Patent Office's Board of Patent Appeals and Interferences, and then to the Federal Circuit. *See* 28 U.S.C. § 1295(a)(4)(A); 37 C.F.R. § 1.191(a) (2000).

[8] Recently, the Federal Circuit has indicated an intention to provide answers *en banc* to certain other general questions relating to the doctrine of equivalents. In January 2001, the court issued an order, *sua sponte*, that it would hear a pending case *en banc*. *Johnson & Johnston Assocs., Inc. v. R.E. Serv. Co.*, 238 F.3d 1347 (Fed. Cir. 2001). It asked the

Court has advised, "the business of federal courts" is to resolve "questions presented in an adversary context and in a form historically viewed as capable of resolution through the judicial process." *Flast v. Cohen*, 392 U.S. 83, 95 (1968); *see also United States v. Fruehauf*, 365 U.S. 146, 157 (1961).

Precisely because the judicial process is best equipped to resolve concrete rather than abstract disputes, this Court has consistently encouraged the lower federal courts to adhere to the facts of the actual controversies before them. By doing so, courts over time construct doctrines on a case-by-case basis, with each holding tied to the facts at issue. As new cases arise, litigants can rely upon or distinguish these cases depending on the specific factual circumstances of each dispute. Doctrines develop incrementally in a way that encourages litigants and the courts to focus on the specific facts of each case and discourages the enunciation of rules whose application to facts not before the court might produce unanticipated results.

Since *Graver Tank*, the lower federal courts, including the Federal Circuit, developed the doctrine of prosecution history estoppel – itself a judicially-created doctrine – in just this way. In *Festo*, however, the questions set forth and answered *en banc* were notably more expansive than the questions actually presented by the facts of the case. The dispute between the parties did not require that new general principles be announced, yet the parties became bystanders as the court, *en banc*, propounded questions and then enunciated a series of rules intended to govern all future prosecution history estoppel cases involving claim amendment. These rules were not limited to the issues raised by Festo's patents, their prosecution, or the specific allegations of infringement. Only after announcing its new

---

parties to brief certain abstract legal questions and invited the participation of *amici curiae* on those questions. *Id.*

general rules did the court address the parties' specific dispute using those rules.

The weight of authority that attends an *en banc* decision will inevitably cause other panels and lower courts to continue to apply the broad rules announced in *Festo*, even though those rules are, when applied beyond the facts in *Festo*, merely dictum. Indeed, the Federal Circuit itself and the district courts have already followed the new rules announced in *Festo* as if they were controlling authority that could not be distinguished. *See, e.g., Senior Techs., Inc. v. R.F. Techs., Inc.*, Nos. 00-1089, 00-1090, 2001 U.S. App. LEXIS 4179, at *17 (Fed. Cir. Mar. 21, 2001); *Litton Sys.*, 238 F.3d at 1380-81; *Pickholtz*, 125 F. Supp. 2d at 1162.[9]

Parts of the *Festo* opinion more closely resemble a legislative enactment than a judicial decision. Like a statute, which is typically drafted so as to apply to a wide variety of circumstances, the *Festo* decision, with its broad questions and answers, purports to have general future application. In addition, like a legislative body, the *Festo* court relied extensively on public policy to justify its conclusions. Unlike legislative bodies, which can commit considerable resources in order to evaluate the costs and benefits of adopting certain policies, however, courts are not similarly equipped.[10] This Court should grant the petition for

---

[9] Indeed, one district court, while clearly regarding itself as constrained to follow the new rules announced in *Festo*, has criticized those rules because of the apparent unfairness that resulted from their application to the case then before that court. *See Control Resources, Inc. v. Delta Elecs., Inc.*, 133 F. Supp. 2d 121, 125, 136-37 (D. Mass. 2001).

[10] Congress may be better equipped to evaluate and adopt far reaching policies in the patent area. Within the past fifteen years, Congress has actively revised the patent laws and, in particular, has expanded both the term of patents as well as the scope of infringement. *See, e.g.*, Patent Term Guarantee Act of 1999, Pub. L. No. 106-113, § 4402, 113 Stat. 1501A-557 (codified at 35 U.S.C. § 154(b)) (providing extension of patent term where application is pending in PTO beyond three years);

certiorari so that it can address the advisability of the Federal Circuit's practice of posing and answering, *en banc*, abstract, general questions that are intended to govern all future cases implicating those questions.

CONCLUSION

For the foregoing reasons, *amicus curiae* Federal Circuit Bar Association respectfully requests that this Court grant the Petition for Writ of Certiorari.

Respectfully submitted,

GEORGE E. HUTCHINSON
EXECUTIVE DIRECTOR,
FEDERAL CIRCUIT
BAR ASSOCIATION
1300 I Street, N.W.
Suite 700
Washington, D.C. 20005
(202) 408-4000

CLAIRE LAPORTE
(Counsel of Record)
MITCHELL J. MATORIN
ROBERT L. BOCCHINO JR.
MEGAN H. MACK
MARK A. REILLY
FOLEY, HOAG & ELIOT LLP
One Post Office Square
Boston, MA 02109
(617) 832-1000
Counsel for Amicus Curiae
The Federal Circuit Bar
Association

Dated: May 9, 2001

Uruguay Round Agreements Act, Pub. L. No. 103-465, § 533(a), 108 Stat. 4988 (1994) (codified in various subsections of 35 U.S.C. § 271) (adding prohibition on offering to sell or importing into United States an invention patented in United States); Process Patent Amendments Act of 1988, Pub. L. No. 100-418, § 9003, 102 Stat. 1563-64 (codified at 35 U.S.C. § 271(g)) (adding prohibition on importation into Unit States, sale, or use within United States of a product made by a process patented in United States). Despite undertaking these revisions, Congress has not altered the state of the law regarding either the doctrine of equivalents or prosecution history estoppel.

No. 00-1543

Supreme Court, U.S.
FILED
MAY 9 2001

IN THE

Supreme Court of the United States

FESTO CORPORATION,

Petitioner,

—v.—

SHOKETSU KINZOKU KOGYO KABUSHIKI CO., LTD., A/K/A SMC CORPORATION AND SMC PNEUMATICS, INC.,

Respondents.

ON PETITION FOR WRIT OF CERTIORARI TO THE UNITED STATES COURT OF APPEALS FOR THE FEDERAL CIRCUIT

BRIEF OF INTERNATIONAL BUSINESS MACHINES CORPORATION, EASTMAN KODAK COMPANY AND FORD MOTOR COMPANY AS *AMICI CURIAE* IN SUPPORT OF RESPONDENTS

Frederick T. Boehm
Kevin M. Jordan
Pryor A. Garnett
Mark F. Chadurjian
IBM Corporation
Armonk, New York 10504

J. Jeffrey Hawley
Andrew J. Anderson
Eastman Kodak Company
Rochester, New York 14650

William J. Coughlin
Daniel M. Stock
Ford Motor Company
Dearborn, Michigan 48121

Christopher A. Hughes
Counsel of Record
Mark J. Abate
MORGAN & FINNEGAN, L.L.P.
345 Park Avenue
New York, New York 10154
(212) 758-4800

May 9, 2001

TABLE OF CONTENTS

PAGE

INTEREST OF AMICI CURIAE..... 1

INTRODUCTION AND SUMMARY OF ARGUMENT 3

ARGUMENT 7

I. CERTIORARI SHOULD BE DENIED BECAUSE THE COURT OF APPEALS' DECISION IS CORRECT UNDER *WARNER-JENKINSON* AND EARLIER PRECEDENT OF THIS COURT 7

II. CERTIORARI SHOULD BE DENIED BECAUSE THE COURT OF APPEALS' DECISION IS NARROW, PRESERVES THE DOCTRINE OF EQUIVALENTS AND REFLECTS AN EXERCISE OF SOUND DISCRETION WITHIN THE FEDERAL CIRCUIT'S AREA OF SPECIAL EXPERTISE 12

A. The Court Of Appeals Followed This Court's Mandate In *Warner-Jenkinson* 12

B. Lower Courts Have Ably And Carefully Applied *Festo* To Preserve The Doctrine of Equivalents 14

III. CERTIORARI SHOULD BE DENIED BECAUSE THE COURT OF APPEALS' DECISION IS CONSISTENT WITH THE PARAMOUNT DEFINITIONAL AND PUBLIC-NOTICE FUNCTIONS OF PATENT CLAIMS AND SOUND PUBLIC POLICY 16

CONCLUSION 20

TABLE OF AUTHORITIES

Cases: **PAGE**

ACLARA BioSciences, Inc. v. Caliper Tech. Corp., 125 F. Supp. 2d 391 (N.D. Cal. 2000) 15

Exhibit Supply Co. v. Ace Patents Corp., 315 U.S. 126 (1942) 10, 11

Festo Corp. v. Shoketsu Kinzoku Kogyo Kabushiki Co., 234 F.3d 558 (Fed. Cir. 2000) (*en banc*) 3-6, 12-16, 18, 19

Graver Tank & Mfg. Co. v. Linde Air Prods. Co., 339 U.S. 605 (1950) 3, 16

Hilton Davis Chem. Co. v. Warner-Jenkinson Co., 62 F.3d 1512 (Fed. Cir. 1995) 7, 19

Honeywell Int'l Inc. v. Hamilton Sundstrand Corp., No. Civ. A. 99-309, 2001 WL 66348 (D. Del. Jan. 8, 2001) 14

I.T.S. Rubber Co. v. Essex Rubber Co., 272 U.S. 429 (1926) 11

Keystone Driller Co. v. Northwest Eng'g. Corp., 294 U.S. 42 (1935) 11

Smith v. Magic City Kennel Club, Inc., 282 U.S. 784 (1931) 9-11

Texas Instruments, Inc. v. United States Int'l Trade Comm'n, 988 F.2d 1165 (Fed. Cir. 1993) 17

PAGE

TM Patents, LLP v. IBM Corp., No. 97 CIV. 1529, 2001 WL 396002 (S.D.N.Y. Jan. 15, 2001) 15-16

Warner-Jenkinson Co. v. Hilton Davis Chem. Co., 520 U.S. 17 (1997).....3-9, 12, 13, 16, 17, 20

Weber Elec. Co. v. E.H. Freeman Elec. Co., 256 U.S. 668 (1921)..... 11

White v. Dunbar, 119 U.S. 47 (1886) 16

Statutes And Other Authorities

35 U.S.C. § 112 18

H. Report No. 97-312 (1981) 12

BRIEF OF INTERNATIONAL BUSINESS MACHINES CORPORATION, EASTMAN KODAK COMPANY AND FORD MOTOR COMPANY AS *AMICI CURIAE* IN SUPPORT OF RESPONDENTS[1]

INTEREST OF AMICI CURIAE

International Business Machines Corporation (IBM) is a world-recognized leader in the field of computer research, development, design and manufacturing. During IBM's nearly 100-year history, its employees have included five Nobel laureates and three National Medal of Science and six National Medal of Technology recipients. IBM has received tens of thousands of United States patents, including more patents than any other corporate assignee for the last eight years running and many patents universally recognized as pioneering. *See, e.g.*, U.S. Pat. Nos. 3,387,286 (array of dynamic random access memory cells), 4,343,993 (scanning tunneling microscope), 5,930,643 (semiconductor material fabrication). IBM has approximately 19,000 active United States patents. IBM licenses its patents on a non-discriminatory basis to over 1,000 licensees. IBM also has been involved in patent litigation, both as the patentee and accused infringer.

Eastman Kodak Company (Kodak) is a world-recognized leader in the field of imaging technology. Kodak spends slightly less than one billion dollars per year on research and development and files a large number of United States patent applications each year. In 1998, for

---

[1] In accordance with Supreme Court Rule 37.6, amici curiae state that this brief was authored in its entirety by the counsel listed on the cover. No person or entity other than the amici curiae listed on the cover made a monetary contribution to the preparation or submission of this brief.

example, more than 1,100 United States patents were issued to Kodak placing it among the top 10 corporate recipients of United States patents (and third among U.S. corporate recipients). Kodak has approximately 8,500 active United States patents. While Kodak has, from time-to-time, been involved in patent litigation, it seeks in most instances to resolve patent disputes through negotiation. Because patent activity has increased dramatically over the past decade, Kodak is frequently involved in the evaluation of patents of others, many outside the scope of its traditional businesses.

Ford Motor Company (Ford) is a leading manufacturer of automobiles and automobile parts and systems which it designs and develops in its engineering facilities throughout the world. Ford has procured thousands of patents and currently has approximately 3,500 unexpired U.S. patents. These patents and their foreign counterparts are the primary focus of Ford's license granting activities. Ford also has acquired many licenses under the patents of others to support its global manufacturing operations. In addition, Ford has engaged in patent litigation involving its own patents and patents of others.

As leading recipients, licensees and licensors of patents, amici curiae IBM, Kodak and Ford are committed to maintaining the integrity of United States patent law and to the proper interpretation and application of the law. By virtue of their practical experience, amici curiae believe their views will aid this Court in the resolution of the issues raised in the Petition.

With the consent of the parties,[2] amici curiae IBM, Kodak and Ford submit this brief in support of respondents to urge this Court to deny the Petition for Writ of Certiorari.

---

[2] Letters reflecting written consent of the parties to the submission of this brief have been filed with the Clerk of the Court.

INTRODUCTION AND SUMMARY OF ARGUMENT

In this case, the *en banc* Federal Circuit addressed the patent law principle known as "prosecution history estoppel." This estoppel is a well-established and necessary legal limit on the doctrine of equivalents—an equitable principle which can expand a patentee's exclusive right beyond the words of the patent claims. Just four years ago, this Court recognized the danger of an unchecked doctrine of equivalents: "the doctrine of equivalents, as it has come to be applied since *Graver Tank* [*& Mfg. Co. v. Linde Air Prods. Co.*, 339 U.S. 605 (1950)], has taken on a life of its own, unbounded by the patent claims" and "when applied broadly, conflicts with the definitional and public-notice functions of the statutory claiming requirement." *Warner-Jenkinson Co. v. Hilton Davis Chem. Co.*, 520 U.S. 17, 28-29 (1997). To avoid those problems, this Court ruled that a patent claim amended for "a substantial reason related to patentability" will create prosecution history estoppel. *Id.* at 33.

Recognizing the "special expertise" of the Federal Circuit "in this area," this Court entrusted responsibility for "refin[ing] the formulation of the test for equivalence" to the "sound judgment" of the Federal Circuit. *Id.* at 40. This case is a direct result of that mandate and should not be disturbed.

The first two issues addressed by the Federal Circuit relate to the circumstances which can create prosecution history estoppel. In a nearly unanimous 11-to-1 decision, the Federal Circuit refined the meaning of "a substantial reason related to patentability" and held: "a narrowing amendment made for any reason related to the statutory requirements for a patent will give rise to prosecution history estoppel with respect to the amended claim ele-

ment." *Festo Corp. v. Shoketsu Kinzoku Kogyo Kabushiki Co.*, 234 F.3d 558, 566 (Fed. Cir. 2000) (*en banc*). In so holding, the Federal Circuit reiterated that prosecution history estoppel should not be limited to amendments made to overcome prior art because there are a number of statutory patentability requirements that are not related to prior art and "the functions of prosecution history estoppel cannot be fully satisfied if substantial reasons related to patentability are limited to a narrow subset of patentability issues." *Id.* at 567.

The Federal Circuit also held in an 11-to-1 decision that: "voluntary claim amendments [not prompted by a Patent Office rejection,] are treated the same as other claim amendments; therefore, any voluntary amendment that narrows the scope of a claim for a reason related to the statutory requirements for a patent will give rise to prosecution history estoppel with respect to the amended claim element." *Id.* at 563-64. Here, the Federal Circuit emphasized the definitional and public-notice function of claims, as noted by this Court, reasoning that "[b]oth voluntary amendments and amendments required by the Patent Office signal to the public that subject matter has been surrendered." *Id.* at 568.

The remaining issues addressed by the Federal Circuit relate to the range of equivalents available when there is prosecution history estoppel. Following this Court's lead that "[w]here no explanation is established . . . [for a] *limiting* element added by *amendment* . . . prosecution history estoppel would *bar* the application of the *doctrine of equivalents*," *Warner-Jenkinson*, 520 U.S. at 33 (emphasis added), the Federal Circuit unanimously held "[w]hen no explanation for a claim amendment is established, no range of equivalents is available for the claim element so amended." *Festo*, 234 F.3d at 578. Then, in an 8-to-4 decision, the Federal Circuit held: "When a claim amendment creates prosecution history estoppel

with regard to a claim element, there is no range of equivalents available for the amended claim element. Application of the doctrine of equivalents to the claim element is completely barred (a 'complete bar')." *Id.* at 569. The Federal Circuit's reasoning on this question expressly drew on its special expertise resulting from nearly twenty years of experience in this area:

> Our decision to reject the flexible bar approach adopted in *Hughes I* comes after nearly twenty years of experience in performing our role as the sole court of appeals for patent matters. In those years, the notice function of patent claims has become paramount, and the need for certainty as to the scope of patent protection has been emphasized. A problem with the flexible bar approach is that it is virtually impossible to predict before the decision on appeal where the line of surrender is drawn.
>
> * * *
>
> After our long experience with the flexible bar approach, we conclude that its "workability" is flawed.

Festo, 234 F.3d at 574-75.

The Petition should be denied because *Warner-Jenkinson* and earlier Supreme Court precedent directly support the decision below. This Court specifically held that for "limiting element[s] added by amendment" prosecution history estoppel is a "bar [to] the application of the doctrine of equivalents. . . ." *Warner-Jenkinson*, 520 U.S. at 33. The Federal Circuit in *Festo* followed this holding. The decision below is also entirely consistent with the modern Supreme Court cases holding that when prosecution history estoppel applies to a claim element it *bars* any range of equivalents for that element. Petitioner ignores those cases, pointing instead to dicta from 19th Century cases.

The Petition should also be denied because the Federal Circuit's rulings are narrow and reflect its 20 years of experience in this area. The Federal Circuit was clear in holding that only a *narrowing amendment for reasons related to the statutory requirements of patentability* can create prosecution history estoppel, and only with respect to the individual claim element that was so narrowed. The doctrine of equivalents is fully applicable to all other claim elements in any claim—including other elements of a claim containing an element to which prosecution history estoppel applies. Moreover, there is ample opportunity to rebut the presumption of prosecution history estoppel for unexplained amendments, as erected in *Warner-Jenkinson*, by showing that an amendment is not narrowing (*e.g.* was made to correct grammar) or is not related to the statutory requirements for patentability. Borrowing from Mark Twain, the "obliteration" of the doctrine of equivalents as foretold by Petitioner is "greatly exaggerated."

Finally, the Petition should be denied because the policies underlying prosecution history estoppel support the decision below. As this Court has recognized, the definitional and public-notice functions of patent claims are paramount. Those functions are fostered by "strict" application of prosecution history estoppel. As owners of significant patent portfolios, who must also regularly evaluate patents of others, amici curiae agree with the Federal Circuit that the "workability" of the flexible approach to prosecution history estoppel is "flawed." *Festo*, 234 F.3d at 575. The flexible approach to prosecution history estoppel inevitably creates an unacceptably large zone of uncertainty surrounding the scope of a patent claim. *See id.* at 575 (flexible approach "virtually impossible to predict"). These uncertainties have caused amici curiae and other companies similarly situated to avoid certain technologies and thereby has

inhibited the introduction of innovative new products to the detriment of amici curiae and the public. When faced with patent assertions and the attendant uncertainties created by the flexible approach, companies such as amici curiae often pay large, unjustified licensing fees to avoid the costs and disruption caused by protracted litigation. These costs are ultimately passed on to the public. Moreover, the flexible approach is susceptible to abuse by unscrupulous patentees "seek[ing] greater coverage for their patents than the patent statute grants." *Hilton Davis Chem. Co. v. Warner-Jenkinson Co.*, 62 F.3d 1512, 1537 (Fed. Cir. 1995) (Plager, J. dissenting).

In short, the *en banc* Federal Circuit has struck the proper balance between fairly recognizing an inventor's patentable contribution and the ability of the public to rely on disclaimers made to obtain the patent grant. Consistent with this Court's directive in *Warner-Jenkinson*, the Federal Circuit's rulings will foster greater "certainty, consistency, and reviewability," and hence fairness, in administering the patent laws, while preserving the availability of the doctrine of equivalents to all claim elements that were not narrowed for statutory patentability reasons.

ARGUMENT

I CERTIORARI SHOULD BE DENIED BECAUSE THE COURT OF APPEALS' DECISION IS CORRECT UNDER WARNER-JENKINSON AND EARLIER PRECEDENT OF THIS COURT

The Petition should be denied because the Federal Circuit's rulings are fully supported by *Warner-Jenkinson* and other prior decisions of this Court. Specifically, with respect to the effect of prosecution history estoppel, in *Warner-Jenkinson* this Court reiterated the applicability of prosecution history estoppel as an absolute legal limit on the doctrine of equivalents:

> Mindful that claims do indeed serve both a definitional and a notice function, we think the better rule is to place the burden on the patent holder to establish the reason for an amendment required during patent prosecution. The court then would decide whether that reason is sufficient to overcome *prosecution history estoppel as a bar to application of the doctrine of equivalents* to the element added by that amendment. Where no explanation is established, however, the court should presume that the patent applicant had a substantial reason related to patentability for including the *limiting element added by amendment*. In those circumstances, *prosecution history estoppel would bar the application of the doctrine of equivalents* as to that element.

520 U.S. at 33 (emphasis added). There is nothing in *Warner-Jenkinson* that limited the circumstances for invoking prosecution history estoppel to amendments made to overcome a prior art rejection. *See Id.* at 30-31. Quite the contrary, *Warner-Jenkinson* provides that voluntary and unexplained amendments are presumed to create prosecution history estoppel unless rebutted. There, in response to a rejection based on prior art showing a process operating at a pH above 9.0, the patentee had amended its claims to exclude processes operating at a pH above 9.0 and also voluntarily amended its claims to exclude processes operating at a pH less than 6.0. *Id.* at 22. The record before this Court apparently provided no explanation for amendment of the claim to include the lower limit pH of 6.0. *Id.* at 32-33. This Court could have simply held that, as a voluntary amendment (and not responsive to a prior art rejection), it did not create prosecution history estoppel. The Court did not do so, but instead ruled that a "voluntary" amendment would give rise to prosecution history estoppel (unless rebutted) which "would bar the application of the doctrine of equivalents as to that element" and remanded the case.

Long prior to *Warner-Jenkinson*, this Court has consistently applied prosecution history estoppel to "strictly" limit the interpretation of claim elements introduced in response to Patent Office rejections to their literal wording—in other words, as a complete bar to the doctrine of equivalents as to those elements. For example, in *Smith v. Magic City Kennel Club, Inc.*, 282 U.S. 784, 786 (1931), the patent covered a dog race track having a "conveyer car" carrying a lure on a horizontal "arm" which was supported at its "projecting end." The last phrase was added by amendment after a claim without that element had been rejected. *Id.* at 788-89. In construing the literal scope of the patent claim, this Court determined that the patentee disclaimed subject matter during prosecution and "strictly construed" the disclaimer against the patentee:

> *If dissatisfied with the rejection he should pursue his remedy by appeal; and where, in order to get his patent, he accepts one with a narrower claim, he is bound by it.* . . . The applicant having limited his claim by amendment and accepted a patent, brings himself within the rules that if the claim to a combination be restricted to specified elements, all must be regarded as material, and that *limitations imposed by the inventor, especially such as were introduced into an application after it had been persistently rejected, must be strictly construed against the inventor and looked upon as disclaimers.* . . . The patentee is thereafter estopped to claim the benefit of his rejected claim or such a construction of his amended claim as would be equivalent thereto.

Id. at 789-90 (emphasis added) (citations omitted). With respect to the doctrine of equivalents, this Court reiter-

ated its prior "strict" application of prosecution history statements against the patentee:

> What has already been said disposes of [the doctrine of equivalents], for *where a patentee has narrowed his claim, in order to escape rejection, he may not "by resort to the doctrine of equivalents, give to the claim the larger scope which it might have had without the amendments, which amount to disclaimer."*

Id. at 790 (emphasis added) (citations omitted).

Similarly, in perhaps the leading modern case on prosecution history estoppel, *Exhibit Supply Co. v. Ace Patents Corp.*, 315 U.S. 126 (1942), this Court strictly applied claim elements added by amendment during the prosecution history against the patentee to preclude any range of equivalents. The patent claimed a pinball game having "conductor means . . . embedded in the table. . . ." *Id.* at 129-30. During prosecution of the patent, to overcome a prior art rejection, the patentee amended the claim to specify that the conductor means was "embedded in the table" rather than "carried by the table" as originally claimed. *Id.* at 133. With respect to the doctrine of equivalents, this Court stated:

> By striking that phrase ["carried by the table"] from the claim and substituting for it "embedded in the table" the applicant restricted his claim to those combinations in which the conductor means, though carried on the table, is also embedded in it. *By the amendment he recognized and emphasized the difference between the two phrases and proclaimed his abandonment of all that is embraced in that difference. The difference which he thus disclaimed must be regarded as material, and since the amendment operates as a disclaimer of that difference it must be strictly construed against him. . . . It follows that*

> *what the patentee, by a strict construction of the claim, has disclaimed*—conductors which are carried by the table but not embedded in it—*cannot now be regained by recourse to the doctrine of equivalents*, which at most operates, by liberal construction, to secure to the inventor the full benefits, not disclaimed, of the claims allowed.

Id. at 136-37 (emphasis added) (citations omitted). *Smith* and *Exhibit Supply Co.* are part of a long line of Supreme Court cases strictly applying prosecution history estoppel to bar any range of equivalents for claim elements that were narrowed by amendment for patentability reasons.[3]

The Supreme Court has been consistent throughout the 20th Century. A patentee cannot, by operation of the doctrine of equivalents, recapture any subject matter that it disclaimed in order to secure allowance of the claims. The entire difference between a broad claim as originally submitted and a narrower claim as issued is disclaimed and abandoned. Thus, no patentee can now claim surprise or be heard to complain. The *en banc* Federal Cir-

---

[3] *See, e.g., I.T.S. Rubber Co. v. Essex Rubber Co.*, 272 U.S. 429, 444 (1926) (claim amendments "must be strictly construed against the inventor and looked upon as disclaimers"); *Keystone Driller Co. v. Northwest Eng'g. Corp.*, 294 U.S. 42, 48-49 (1935) ("we do apply the principle that, where such broad claims are denied and a narrower substituted, the patentee is estopped to read the granted claim as the equivalent of those which were rejected. . . . In other words, we find no justification for enlarging the scope of what is described, but rather the requirement of strict limitation to that which is specified. . . .") (citations omitted); *Weber Elec. Co. v. E.H. Freeman Elec. Co.*, 256 U.S. 668, 677-78 (1921) ("Having thus narrowed his claim against rotary movement in order to obtain a patent the patentee may not by construction, or by resort to the doctrine of equivalents, give to the claim the larger scope which it might have had without the amendments, which amount to a disclaimer of rotation as an operative feature of his device.").

cuit simply followed the holdings of those cases in ruling that a narrowing amendment for reasons related to the statutory requirements of patentability precludes recapture of the disclaimed subject matter.

II CERTIORARI SHOULD BE DENIED BECAUSE THE COURT OF APPEALS' DECISION IS NARROW, PRESERVES THE DOCTRINE OF EQUIVALENTS AND REFLECTS AN EXERCISE OF SOUND DISCRETION WITHIN THE FEDERAL CIRCUIT'S AREA OF SPECIAL EXPERTISE

A The Court Of Appeals Followed This Court's Mandate In Warner-Jenkinson

In *Warner-Jenkinson*, this Court entrusted the responsibility for refining the doctrine of equivalents to the sound judgment of the Federal Circuit:

> we see no purpose in going further and micromanaging the Federal Circuit's particular word choice for analyzing equivalence. We expect that the Federal Circuit will refine the formulation of the test for equivalence in the orderly course of case-by-case determinations, and we leave such refinement to that court's sound judgment in this area of its special expertise.

520 U.S. at 40. *See id.* at 39 n. 8 ("We leave it to the Federal Circuit how best to implement procedural improvements to promote certainty, consistency, and reviewability to this area of the law"). This is consistent with the goals and purpose underlying the creation of the Federal Circuit. *See* H. Rep No. 97-312 at 17-24 (1981). The Federal Circuit followed this Court's directive to refine the test for equivalents on remand.

The Federal Circuit posed and answered questions relating to the: (i) circumstances creating prosecution history estoppel (questions 1 and 2); and (ii) range of equivalents available under the doctrine of equivalents where there is prosecution history estoppel (questions 3 and 4). *Festo*, 234 F.3d at 563. The holdings of *Festo* will promote "certainty, consistency and reviewability to this area of the law." Having carefully discharged this Court's mandate, the Federal Circuit's judgment should not be disturbed.

Contrary to Petitioner's alarmist "sky is falling" cry that *Festo* "obliterates" the doctrine of equivalents, the Federal Circuit rulings are quite narrow and specific—refinements on the balance between prosecution history estoppel and the doctrine of equivalents. Except for the limited circumstance where a claim element is narrowed by amendment for statutory patentability reasons, the doctrine of equivalents remains fully available.

The conclusions reached by the Federal Circuit follow directly from this Court's ruling in *Warner-Jenkinson*. Specifically, as this Court ruled, an unexplained claim amendment is presumed to have been made for patentability purposes and, unless rebutted, will bar application of the doctrine of equivalents to the amended claim element. Given this rule applicable to unexplained amendments it is difficult to understand how an amendment coupled with an explanation that it was made for reasons of patentability could be treated any differently. It follows, then, that the same bar must apply to any claim element which is narrowed for the explicit purpose of satisfying the statutory requirements for patentability.

The Federal Circuit's holdings leave entirely intact the doctrine of equivalents with respect to all claim elements that were not narrowed by amendment to satisfy a statutory requirement for patentability. *See Festo*, 234 F.3d at 567-68 ("if a patent holder can show from the prosecution history that a claim amendment was not motivated

by patentability concerns, the amendment will not give rise to prosecution history estoppel"). In addition to claims that have not been amended at all, even claims that have been amended will have the benefit of the doctrine of equivalents as to any and all claim elements that have not been narrowed for patentability reasons—*e.g.* unamended claim elements, claim elements that have been broadened by amendments, or claim elements that have been amended to make grammatical corrections.

B Lower Courts Have Ably And Carefully Applied *Festo* To Preserve The Doctrine of Equivalents

Consistent with the *Festo* decision, the lower courts have applied *Festo* quite carefully to foster greater certainty, consistency, reviewability and fairness in administering the patent laws, while preserving the availability of the doctrine of equivalents.

In *Honeywell Int'l Inc. v. Hamilton Sundstrand Corp.*, No. Civ. A. 99-309, 2001 WL 66348, at *4 (D. Del. Jan. 8, 2001), the district court ruled that prosecution history estoppel did not apply where the patentee merely rewrote allowable claims in independent form:

> The patent examiner rejected substantially all of the original claims based on the prior art. However, the remaining dependent claims would be allowed if rewritten into independent form. Since the examiner had rejected all of the other claims, these claims had to be rewritten because they would no longer make sense as written in dependent form. In this case, the elements at issue were not surrendered at all.

Id. at *6. Accordingly, the court held that the patentee was not barred by prosecution history estoppel from maintaining its claim of infringement under the doctrine of equivalents.

In *ACLARA BioSciences, Inc. v. Caliper Tech. Corp.*, 125 F. Supp. 2d 391, 400 (N.D. Cal. 2000), the court considered whether *Festo* applied to the entirety of a claim clause (the "plurality of electrodes" clause) that was amended during prosecution or whether it applied to individual portions of the clause. The court determined that the amended claim clause actually specified three separate components: a "number of electrodes component," a "non-insulation component," and an "electrode configuration component." The court ruled that the *Festo* bar only applied to the *one* component that was actually amended, not all three:

> ACLARA's amendment undoubtedly creates amendment-based estoppel as to the non-insulation component under *Festo*. ACLARA amended that component and narrowed its literal scope for a reason related to patentability. As a result, ACLARA is barred from asserting any range of equivalents as to the non-insulation component of the "plurality of electrodes" clause.
>
> * * *
>
> However, ACLARA's amendment did not alter the electrode configuration component of the "plurality of electrodes" clause. ACLARA did not surrender any subject matter related to where along the trenches the electrodes should be placed; its amendment was limited to whether the electrodes should be insulated from the medium.

Id. at 400-01. The court decided that a single clause in a claim describing one particular physical structure can contain several elements and, accordingly, prosecution history estoppel under *Festo* must be applied individually to each of the elements, not to a claim clause as a whole. *Id.* at 403. *See TM Patents, LLP v. IBM Corp.*, No. 97 CIV. 1529, 2001 WL 396002, at *3 (S.D.N.Y.

Jan. 15, 2001) (*Festo* only applied to functional portion of means-plus-function claim element).

These cases illustrate the continuing vitality of the doctrine of equivalents and refute Petitioner's exaggeration of the refinements reflected by *Festo*. As these cases and others proceed through the district courts and Federal Circuit, there will undoubtedly be further refinements to the doctrine of equivalents and prosecution history estoppel as anticipated by this Court in *Warner-Jenkinson*.

III CERTIORARI SHOULD BE DENIED BECAUSE THE COURT OF APPEALS' DECISION IS CONSISTENT WITH THE PARAMOUNT DEFINITIONAL AND PUBLIC-NOTICE FUNCTIONS OF PATENT CLAIMS AND SOUND PUBLIC POLICY

Since the time patent claims became statutorily required, their function has always been to define the patent rights and provide notice to the public of the scope of those rights. *White v. Dunbar*, 119 U.S. 47, 52 (1886) ("The claim is a statutory requirement, prescribed for the very purpose of making the patentee define precisely what his invention is; and it is unjust to the public, as well as an evasion of the law, to construe it in a manner different from the plain import of its terms."). In *Warner-Jenkinson*, the Court recognized that broad application of the doctrine of equivalents conflicts with the definitional and public-notice functions of patent claims:

> We do, however, share the concern of the dissenters below that the doctrine of equivalents, as it has come to be applied since *Graver Tank*, has taken on a life of its own, unbounded by the patent claims. There can be no denying that the doctrine of equivalents, when applied broadly, conflicts with the definitional and public-notice functions of the statutory claiming requirement.

520 U.S. at 28-29. *See id.* at 33 (noting need for "proper deference to the role of claims in defining an invention and providing public notice"). Thus, this Court reaffirmed the paramount importance of the definitional and public-notice functions of claims in applying prosecution history estoppel to bar the doctrine of equivalents. *Id.*

Prosecution history estoppel complements and reinforces the definitional and public-notice functions of patent claims by preventing patentees from recapturing through the equitable doctrine of equivalents subject matter that was abandoned or disclaimed during prosecution of the patent. That is, abandonment or disclaimer of certain subject matter during prosecution of a patent by a narrowing claim amendment, circumscribes the patent rights defined in the claim and provides additional express notice to the public of what is and what is not within the scope of those rights. *Texas Instruments, Inc. v. United States Int'l Trade Comm'n*, 988 F.2d 1165, 1175 (Fed. Cir. 1993).

To place the rationale for prosecution history estoppel in perspective, it is not a Patent Office rejection that triggers prosecution history estoppel as Petitioner suggests. Rather, the estoppel occurs because of the patentee's deliberate choice in making a narrowing claim amendment and thereby disclaiming certain subject matter to obtain the patent grant. Prosecution history estoppel binds the patentee to those disclaimers made during prosecution, whether "voluntary" or explicitly in response to a rejection, consistent with the definitional and public-notice functions of patent claims.

For example, a patentee may become aware of prior art during prosecution that is not the basis of an explicit rejection imposed by the Patent Office. If the patentee

amends its claims to avoid that prior art, a disclaimer has been made that cannot be circumvented by the doctrine of equivalents. Likewise, when a patentee amends its claims to address a lack of enablement problem, 35 U.S.C. § 112 ¶ 1, that has not been the basis of a rejection, a similar disclaimer has been made upon which the public should be able to rely. In those instances, the patentee may not have explicitly stated the reasons for the amendment, but the change in the claim made by the amendment is readily apparent to the public; the public is entitled to rely on that change without trying to divine the patentee's intent.

Before *Festo*, some Federal Circuit decisions applied the so-called "flexible approach" to prosecution history estoppel. As the Federal Circuit recognized in *Festo*, the flexible approach is unworkable and contravenes the definitional and public-notice function of patent claims. It creates a zone of uncertainty as to the scope of a patent claim. For example, the flexible approach has had a chilling effect on amici curiae (and other companies similarly situated) in pursuing and developing certain technologies and thereby has prevented the introduction of innovative new products to the detriment of amici curiae and the public. *See Festo*, 234 F.3d at 577 ("Under the flexible bar approach, however, the exact range of equivalents when prosecution history estoppel applies is virtually unascertainable. . . ."). It can also result in payment of large, unjustified licensing fees to avoid those uncertainties in litigation; costs which are invariably passed along to the public in terms of higher prices.

Moreover, unbridled availability of the doctrine of equivalents can easily lead to abuse, resulting in unjustified and costly litigation. As noted in Judge Lourie's concurrence in *Festo*:

> It has been said that there is no hard evidence showing that the so-called "flexible" bar impairs predictability. While it is true that empirical data may not be available, powerful evidence may be garnered from the experience of this court, which monthly reviews appeals in which infringement is asserted under the doctrine of equivalents even though the accused product is clearly not within the literal scope of the asserted claims. Many of these appeals involve prosecution histories in which amendments for patentability reasons have been made. Yet, equivalence is argued in the hope that one panel might find equivalence where another would not. That surely is persuasive evidence that the current flexible bar is not working.

Festo, 234 F.3d at 596 (Lourie, J., concurring). *See id.* at 576 (flexible bar is "a benefit [to the patentee] that comes at the public's expense."). Similarly, Judge Plager in dissent in *Hilton-Davis* stated:

> [T]oday the doctrine is regularly used by patentees to seek greater coverage for their patents than the patent statute grants.
>
> * * *
>
> [t]he doctrine of equivalents is a virtually uncontrolled and unreviewable license to juries to find infringement if they so choose. And this is done largely without regard to and independent of the express limitations of the patent claims which may have brought about their allowance by the Patent and Trademark Office (PTO) in the first place.

Hilton-Davis, 62 F.3d 1512, 1537-38 (Plager, J., dissenting) (citation omitted).

Because of the paramount definitional and public-notice functions of patent claims and to curtail abuse of the doctrine of equivalents by patentees, the Petition should be denied.

CONCLUSION

The Petition for Writ of Certiorari should be denied because the Federal Circuit correctly held that an estoppel can and should be created in *all* contexts (prior art and non-prior art; voluntary and in response to a rejection) in which an amendment narrows the scope of a claim element for any reason related to a statutory requirement for a patent. Such an amendment serves as a disclaimer and thereby bars application of the doctrine of equivalents to the narrowed claim element.

The *en banc* Federal Circuit exercised its discretion in its special area of expertise in accordance with this Court's mandate in *Warner-Jenkinson* and sound public policy. For these reasons, the Petition should be denied.

Respectfully submitted

Dated: May 9, 2001 By: _____

Christopher A. Hughes
Counsel of Record
Mark J. Abate
MORGAN & FINNEGAN, L.L.P.
345 Park Avenue
New York, New York 10154
(212) 758-4800

Frederick T. Boehm
Kevin M. Jordan
Pryor A. Garnett
Mark F. Chadurjian
IBM Corporation
Armonk, New York 10504

J. Jeffrey Hawley
Andrew J. Anderson
Eastman Kodak Company
Rochester, New York 14650

William J. Coughlin
Daniel M. Stock
Ford Motor Company
Dearborn, Michigan 48121

(10)

No. 00-1543

Supreme Court, U.S.
FILED
MAY 9 2001
OFFICE OF THE CLERK

In The

Supreme Court of the United States

FESTO CORPORATION,

Petitioner,

v.

SHOKETSU KINZOKU KOGYO KABUSHIKI CO., LTD., A/K/A SMC CORPORATION and SMC PNEUMATICS, INC.,

Respondents.

On Petition For Writ Of Certiorari To The United States Court Of Appeals For The Federal Circuit

BRIEF OF AMICI CURIAE CHIRON CORPORATION, GUILFORD PHARMACEUTICALS, INC., AND XOMA IN SUPPORT OF PETITION FOR WRIT OF CERTIORARI

CHIRON CORPORATION
ROBERT P. BLACKBURN
4560 Horton Street
Emeryville, California
94608
(510) 655-8730

DONALD S. CHISUM
Counsel of Record
755 Page Mill Road
Palo Alto, California
94304-1018
(650) 813-5600

Counsel for Amici Curiae Chiron Corporation, Guilford Pharmaceuticals, Inc., and XOMA

May 9, 2001

COCKLE LAW BRIEF PRINTING CO., (800) 225-6964
OR CALL COLLECT (402) 342-2831

30 pp

TABLE OF CONTENTS

Page

STATEMENT OF INTEREST 1

SUMMARY OF ARGUMENT..... 1

ARGUMENT 3

I. THE BIOTECHNOLOGY INDUSTRY DEPENDS ON A STRONG DOCTRINE OF EQUIVALENTS 3

A. The Complete Bar Rule of Festo Represents a Drastic Change in Patent Law that Should Be Made, If at All, by Congress 3

B. The Public Interest in Biotechnology Innovation Would Be Impaired If the Doctrine Were Eliminated or Cut Back..... 7

II. THE NEW RULES ANNOUNCED IN *FESTO* SHOULD NOT BE APPLIED RETROACTIVELY 12

A. Application of the *Chevron* Factors Demonstrates that *Festo* Should Only Be Applied Prospectively 13

1. The Complete Bar Represents a New Principle of Law 13

2. Retroactive Application of *Festo* Does Not Promote the Goals of Certainty and Promoting Innovation 14

3. Festo Retroactively Alters the Bargain Between the Patentee and the Government 15

TABLE OF CONTENTS – Continued

Page

B. Retroactive Application of *Festo* Deprives Patentees of Their Property Rights Without Due Process 17

CONCLUSION 20

APPENDIX .....App. 1

TABLE OF AUTHORITIES

Page

CASES

Amgen, Inc. v. Chugai Pharm. Co., 927 F.2d 1200 (Fed. Cir. 1991)..... 10

Amgen, Inc. v. Hoechst Marion Roussel, 126 F.Supp.2d 69 (D. Mass. 2001) 11

Athletic Alternatives, Inc. v. Prince Mfg., Inc., 73 F.3d 1573 (Fed. Cir. 1996)..... 15

Bonito Boats, Inc. v. Thunder Craft Boats, Inc., 489 U.S. 141 (1989) 17

Brinkerhoff-Faris Trust & Sav. v. Hill, 281 U.S. 673 (1930) 19

Chevron Oil Co. v. Huson, 404 U.S. 97 (1971)..... 13

Chiron Corp. v. Abbott Lab., Inc., 902 F.Supp. 1103 (N.D. Cal. 1995)..... 6

Diamond v. Chakrabarty, 447 U.S. 303 (1980)..... 8

Eibel Process Co. v. Minnesota & Ontario Paper Co., 261 U.S. 45 (1923) 5

Festo Corp. v. Shoketsu Kinzoku Kogyo Kabushiki Co., Ltd., 234 F.3d 558 (Fed. Cir. 2000)..... *passim*

Graham v. John Deere Co., 383 U.S. 1 (1966)..... 17

Graver Tank & Mfg. Co. v. Linde Air Prods. Co., 339 U.S. 605 (1950) 4, 15, 16

Griffin v. Illinois, 351 U.S. 12 (1956) 17

TABLE OF AUTHORITIES – Continued

Page

Harper v. Virginia Dept. of Taxation, 509 U.S. 86 (1993) 13

Hilton Davis Chem. Co. v. Warner-Jenkinson, Inc., 114 F.3d 1161 (Fed. Cir. 1997) 12

Hitzeman v. Rutter, 243 F.3d 1345 (Fed. Cir. 2001) 6

Hughes v. Washington, 389 U.S. 290 (1967) 18

In re Angstadt, 537 F.2d 498 (C.C.P.A. 1976) 5, 6

In re Bell, 991 F.2d 781 (Fed. Cir. 1993) 10

In re Berg, 140 F.3d 1428 (Fed. Cir. 1998) 18

Kewanee Oil Co. v. Bicron Corp., 416 U.S. 470 (1974) 6, 16, 19

Key Pharms. v. Hercon Lab. Corp., 161 F.3d 709 (Fed. Cir. 1998) 14

Markman v. Westview Instr., Inc., 517 U.S. 370 (1996) 4

Mathews v. Eldridge, 424 U.S. 319 (1976) 19

Regents of the University of California v. Eli Lilly & Co., 119 F.3d 1559 (Fed. Cir. 1997) 9

Ruckelshaus v. Monsanto Co., 467 U.S. 986 (1984) 18

Stevens v. City of Cannon Beach, 510 U.S. 1207, 114 S.Ct. 1332 (1994) 19

TSC Indus., Inc. v. Northway, Inc., 426 U.S. 438 (1976) 5

Transmatic, Inc. v. Gulton Indus., Inc., 53 F.3d 1270 (Fed. Cir. 1995) 4

TABLE OF AUTHORITIES – Continued

Page

Warner-Jenkinson Co., Inc. v. Hilton Davis Chem. Co., 520 U.S. 17 (1997) ..... *passim*

Winans v. Denmead, 56 U.S. (15 How.) 330 (1854) ..3, 15

CONSTITUTIONS, STATUTES AND REGULATIONS

U.S. Const., Fifth Amendment 18, 19

35 U.S.C. § 102 5

35 U.S.C. § 103 5

35 U.S.C. § 112 5

35 U.S.C. § 154 18

37 C.F.R. §§ 1.821 et seq 10

MISCELLANEOUS

141 Cong. Rec. S15221 (daily ed. Oct. 17, 1995) (statement of Sen. Hatch) 7

146 Cong. Rec. S144 (daily ed. Jan. 31, 2000) (statement of Sen. Hatch) 7

146 Cong. Rec. S144 (daily ed. Jan. 31, 2000) (statement of Sen. Mikulski) 7

Arthur Andersen, *Patients or Patents? New Andersen Survey Reveals What Matters Most to the 21st Century Healthcare Community* <http://biz.yahoo.com/prnews/010424/cgtu031.html> (April 24, 2001) 7

3 D. Chisum, Patents § 8.03[3][c] (2000) 5

K. Drlica, *Understanding DNA and Gene Cloning: A Guide for the Curious* 27-37 (2d ed. 1992) 8

TABLE OF AUTHORITIES – Continued

Page

Lodish *et al., Molecular Cell Biology* 55 (1995) 9

Manual of Patent Examining Procedure §§ 2420 et seq. 10

Rausch, *International Patenting Trends in Biotechnology: Genetic Engineering*, National Science Foundation, Issue Brief NSF 99-351 <http://www.nsf.gov/sbe/srs/issuebrf/sib99351.htm> (June 18, 1999) 8

U.S. Department of Commerce, Patent & Trademark Office, *Manual of Patent Examining Procedure* §§ 2420 et seq. (rev. ed. Feb. 2000) 10

STATEMENT OF INTEREST

Chiron Corporation, Guilford Pharmaceuticals, Inc., and XOMA are biotechnology and biopharmaceutical companies.[1] They depend on strong patent protection to obtain a reasonable return for their research and development costs to bring new drugs and medical products to market and to encourage stockholder investment. These companies rely on a vigorous doctrine of equivalents to ensure adequate protection for their inventions.[2]

SUMMARY OF ARGUMENT

The biotechnology and biopharmaceutical industry and the consumers of the industry's medical innovations benefit from a vigorous doctrine of equivalents. Patent protection for biotechnological inventions attracts investment capital to the industry, making possible the research necessary to discover and develop life-saving and life-improving medical treatments, which routinely require over ten years for research, development, and regulatory approval. The doctrine of equivalents has been crucial to the adequate protection of biotechnology inventions. Without benefit of the doctrine of equivalents, biotechnology patents will suffer a significant diminution in value, the industry will find it more difficult to attract investment and could not continue the research necessary to develop new treatments and save lives.

---

[1] Written consent to the filing of this brief has been obtained from the parties and is lodged herewith. Counsel for a party did not author this brief in whole or in part. No person or entity other than the *amici curiae*, its members, or its counsel made a monetary contribution to the preparation and submission of this brief.

[2] The Appendix to this brief provides a more detailed description of Chiron Corporation, Guilford Pharmaceuticals, Inc., and XOMA.

The Court should grant *certiorari* to determine whether the *Festo* decision conflicts with the policy underlying patent law. Biotechnology inventions illustrate the need for the doctrine of equivalents to protect patentees' property rights against loss from alterations found to be equivalent after a patent is filed. First, many possible modifications to a biotechnology invention that could defeat literal infringement have no substantive impact on the invention. *Festo* provides a roadmap for a would-be copyist to avoid infringement by, for example, substituting a known interchangeable amino acid at one position of a claimed protein. This sort of substitution would be obvious to one of ordinary skill in the art, and increases the incentive to imitate while lessening the incentive to innovate. Second, there are after-developed improvements that build upon an invention, adding additional features or properties. The improvement itself may be patentable. That fact, however, should not limit the rights of the inventor whose basic invention is being exploited.

The Court should also grant *certiorari* to consider whether, if a complete bar is necessary to prevent ambiguity in the application of the doctrine of equivalents, the holding of *Festo* should only be applied prospectively – *i.e.*, to patents issuing from applications filed after *Festo*. The long-established availability of the doctrine of equivalents has profoundly influenced how inventors draft and prosecute their patent applications, especially in the biotechnology field. Applicants typically submitted broad claims for an invention and narrowed the scope during examination. Very few applications sailed through prosecution without any amendment or argument to distinguish prior art. Prior to *Festo*, in accordance with the decisions of this Court and the Federal Circuit, applicants agreed to claim amendments without expecting to surrender all protection under the doctrine of equivalents. Under *Festo*, the vast majority of patents in force today

will suffer a significant loss in the property right that existed upon grant of the patent without due process for the owners of these patents. The retroactive application of *Festo* may be one of the most significant takings of existing property rights by the federal courts. Because *Festo* announces a new principle of law and upsets the settled expectations of the parties to the patent system, it should not be given retroactive effect.

ARGUMENT

I. THE BIOTECHNOLOGY INDUSTRY DEPENDS ON A STRONG DOCTRINE OF EQUIVALENTS

A. The Complete Bar Rule of *Festo* Represents a Drastic Change in Patent Law that Should Be Made, If at All, by Congress

By holding "that when a claim amendment creates prosecution history estoppel, no range of equivalents is available for the amended claim element," the *Festo* court has dramatically altered the landscape of patent law. *Festo Corp. v. Shoketsu Kinzoku Kogyo Kabushiki Co., Ltd.*, 234 F.3d 558, 564 (Fed. Cir. 2000) (*en banc*). This decision "unfairly tips the balance away from patentees and toward competitors by constraining the legitimate rights of patentees to their inventions, even where competitors can reasonably determine the reasons for any amendments and the scope of any subject matter surrendered." *Id.* at 620-621 (Linn, J., dissenting in part). Such a shift in policy may particularly harm an industry, like biotechnology, where a claimed invention immediately suggests a large number of equivalents. *See id.* at 617 (Michel, J., dissenting in part).

The doctrine of equivalents has been an integral part of the United States patent system for nearly 150 years, since *Winans v. Denmead*, 56 U.S. (15 How.) 330 (1854). In subsequent years, this Court's decisions repeatedly affirmed the vitality of the doctrine and rejected efforts to

limit its scope. *See, e.g., Graver Tank & Mfg. Co. v. Linde Air Prods. Co.*, 339 U.S. 605, 608-09 (1950) (collecting cases). This Court has reiterated the importance of the doctrine, noting that a patent claim "functions to forbid not only exact copies of an invention, but products that go to 'the heart of an invention but avoids the literal language of the claim by making a noncritical change.' " *Markman v. Westview Instr., Inc.*, 517 U.S. 370, 373-74 (1996) (quoting H. Schwartz, Patent Law and Practice 82 (2d ed. 1995)).

Potential infringers must consider the doctrine when evaluating whether to engage in conduct that may infringe a patent. The decision to practice a patented invention near the borders of its claims is a calculated risk, requiring no more care than in analogous areas of the law. Application of the "insubstantial difference" test for equivalency is no less certain, for example, than application of a "reasonableness" test found in ordinary tort law. *See Warner-Jenkinson Co., Inc. v. Hilton Davis Chem. Co.*, 520 U.S. 17, 40 (1997). Parties must make judgment calls, and patent attorneys, schooled in claim interpretation and familiar with the technology, are eminently able to make such determinations. That they may sometimes be wrong is no reason to eliminate or severely limit the doctrine. They are also sometimes wrong in opining on literal infringement. *See, e.g., Transmatic, Inc. v. Gulton Indus., Inc.*, 53 F.3d 1270, 1278-79 (Fed. Cir. 1995).

Festo will lead to a number of predictable consequences. First, patentees, unable to rely on the doctrine of equivalents, will claim a greater number of variants of their inventions to attempt to gain protection against insubstantial changes. Such additional disclosures could cause an explosion in the verbiage a patent contains. This change to current patent drafting practice could lead to an even greater reliance on the doctrine of equivalents because narrowly drafted claims allowed by the PTO without any amendment would still be entitled to a range

of equivalents. *See Festo*, 234 F.3d at 592 (Plager, J., concurring).

The Court of Customs and Patent Appeals noted that "[t]o require such a complete disclosure would apparently necessitate a patent application or applications with 'thousands' of examples . . . along with information as to whether each exhibits [the property of the invention]." *In re Angstadt*, 537 F.2d 498, 502 (C.C.P.A. 1976). Because the additional information disclosed would consist of insubstantial variations, there would be little corresponding public benefit from this disclosure. Instead of reasonable notice of the scope of claims (including equivalents), competitors would be buried in "an avalanche of trivial information – a result that is hardly conducive to informed decisionmaking." *TSC Indus., Inc. v. Northway, Inc.*, 426 U.S. 438, 448-49 (1976) (finding that excessive financial disclosure provides less useful information than concise summaries).

Festo also encourages patentees to blur the boundaries of their inventions with broadening terms and imprecise adjectives. *See, e.g., Eibel Process Co. v. Minnesota & Ontario Paper Co.*, 261 U.S. 45, 66 (1923) (using "substantial" and "high" to describe a patentable improvement to a papermaking machine); *see generally* 3 D. Chisum, Patents § 8.03[3][c] (2000) (discussing words of degree and relational terms). During examination, a patent examiner must evaluate whether each claim is definite, enabled by the specification, and supported by a written description. 35 U.S.C. § 112. In addition, the examiner must compare each claim to the prior art to determine whether the art anticipated or rendered obvious the claim. 35 U.S.C. §§ 102, 103. The additional work created by vastly greater numbers of claims per patent and the use of fuzzy terms would increase the time

from the filing of a patent application to issuance of a patent.[3]

If this Court affirms the complete bar rule, patents obtained pre-*Festo* in reliance on the doctrine of equivalents could become valueless. Very few patents are granted with claims as originally filed. *See Festo*, 234 F.3d at 638 (Newman, J., dissenting in part). Many patentees accepted claim language amendments suggested by the PTO to facilitate allowance of their patents without intending to surrender claim scope. *See id.* at 234 F.3d at 622 (Linn, J., dissenting in part). If any change in the law is appropriate, it should be made by Congress, which can adopt suitable grandfathering legislation.

Lastly, and contrary to the constitutional objective of encouraging public disclosure of useful inventions, *Festo* may cause companies to rely more heavily on trade-secret protection for their inventions. "The interest of the public is that the bargain of 17 years of exclusive use in return for disclosure be accepted." *Kewanee Oil Co. v. Bicron Corp.*, 416 U.S. 470, 489 (1974). Faced with uncertainty that their patents may be rendered valueless by only strict literal reading, inventors may choose to limit early disclosure of certain inventions, especially in unpredictable arts such as biotechnology. *See Angstadt*, 537 F.2d at 503. But, because competitors could reverse engineer biotechnology and biopharmaceutical products without great difficulty, trade secret protection is often impractical. Without the exclusivity offered by reasonable patent

---

[3] Biotechnology patents, which now may take eight or ten years to issue could well take fifteen years instead, leaving the patentee with only a few years of protection. *See, e.g., Hitzeman v. Rutter*, 243 F.3d 1345, 1348 (Fed. Cir. 2001) (Federal Circuit decision granting priority over nineteen years after filing of priority application); *Chiron Corp. v. Abbott Lab., Inc.*, 902 F.Supp. 1103, 1108-1109 (N.D. Cal. 1995) (eight years from filing to issuance).

or trade secret protection, the biotechnology industry has less of an incentive to innovate, and, consequently, the public interest suffers.

B. The Public Interest in Biotechnology Innovation Would Be Impaired If the Doctrine Were Eliminated or Cut Back

"It would be difficult to underestimate the effect that biotechnology will have on health care delivery and, more to the point, on the health care status of the American public and our neighbors throughout the world." 146 Cong. Rec. S144 (daily ed. Jan. 31, 2000) (statement of Sen. Hatch). "Approximately 1,300 biotech companies in this country employ more than 150,000 people. . . . The industry spent nearly $10 billion on research and development in 1998 while revenues totaled $18.4 billion." *Id.* (statement of Sen. Mikulski). "The biotechnology industry relies heavily on patent protection in recouping the costs of bringing new drugs to the market. Furthermore, adequate patent protection is vital in persuading investors to provide the necessary capital to the industry." 141 Cong. Rec. S15221 (daily ed. Oct. 17, 1995) (statement of Sen. Hatch).[4]

---

[4] Recently, Arthur Andersen reported, in a survey of 272 senior industry executives in the pharmaceutical, biotechnology, and health care industries, "the development and protection of intellectual property is seen [to be] the most critical area" that drives their organizations' business strategies. Ninety-four percent of the respondents indicated that protecting proprietary research was a critical challenge, and ninety percent identified patent infringement as a critical area. Arthur Andersen, *Patients or Patents? New Andersen Survey Reveals What Matters Most to the 21st Century Healthcare Community* <http://biz.yahoo.com/prnews/010424/cgtu031.html> (April 24, 2001).

Much of the explosive growth in the biotechnology industry has resulted from technological advances in the last twenty years. Not coincidentally, this Court's decision in *Diamond v. Chakrabarty*, 447 U.S. 303, 309 (1980), that a human-made, genetically-engineered, living organism is patentable subject matter, signaled the beginning of the biotechnology industry itself. The United States has since emerged as the world's leading producer of biotechnology inventions, being the priority country for 63% of the patent families filed worldwide in 1990-94. *See* Rausch, *International Patenting Trends in Biotechnology: Genetic Engineering*, National Science Foundation, Issue Brief NSF 99-351 <http://www.nsf.gov/sbe/srs/issuebrf/sib99351.htm> (June 18, 1999). *Festo* weakens that crucial patent protection – a result that negatively impacts the American biotechnology industry.

To understand the special importance of the doctrine of equivalents to biotechnology patents, a modicum of background in biology is helpful. All living organisms contain genetic material, usually made of DNA (deoxyribonucleic acid). Smaller molecules, called nucleotides, are arranged in a DNA molecule like beads on a string. Only four nucleotides, typically labeled A, T, C, and G, comprise DNA, but a single strand of DNA may have thousands or millions of nucleotides.[5]

DNA contains encoded information that living cells use to build proteins. Proteins are molecules that perform a wide variety of functions in living organisms, from digesting food to forming muscles to helping the immune system combat infections. Like DNA, proteins can be described as linear (chain-like) molecules. All protein chains are made from combinations of smaller molecules,

---

[5] For additional background, *see* K. Drlica, *Understanding DNA and Gene Cloning: A Guide for the Curious* 27-37 (2d ed. 1992).

called amino acids. There are twenty possible amino acids that can be classified based on their chemical characteristics. *See* Lodish *et al., Molecular Cell Biology* 55 (1995). The sequence of nucleotides in DNA "encodes" the sequence of amino acids in a protein. Each group of three nucleotides in a DNA sequence "codes" for one amino acid. In this way, a long molecule of DNA directs the production of a long protein molecule. Living cells have a complex machinery that "reads" a molecule of DNA, taking the sequence information from the DNA molecule and building the corresponding protein. A "gene" is simply a sequence of DNA that encodes for a particular protein.

The doctrine of equivalents is essential for biotechnology patents claiming particular genes or proteins. In biotechnology patent cases, the Federal Circuit has focused on specific disclosure of a gene's exact sequence. *See Regents of the University of California v. Eli Lilly & Co.*, 119 F.3d 1559, 1566 (Fed. Cir. 1997). Thus, under the policy that the PTO applies during biotechnology patent examinations, it is extremely difficult to obtain allowance of a claim for "a DNA sequence encoding protein X" unless the patent specification discloses the exact DNA sequence and the claims are correspondingly limited to it. Therein lies the rub. Because there are sixty-four combinations of three nucleotides (recall that three nucleotides encode one amino acid) and only twenty amino acids, several different combinations of nucleotides are known to encode for the same amino acid. For example, nucleotides AGG and CGA both code for the same amino acid. Thus, two very different strands of DNA can encode the same amino acid sequence:

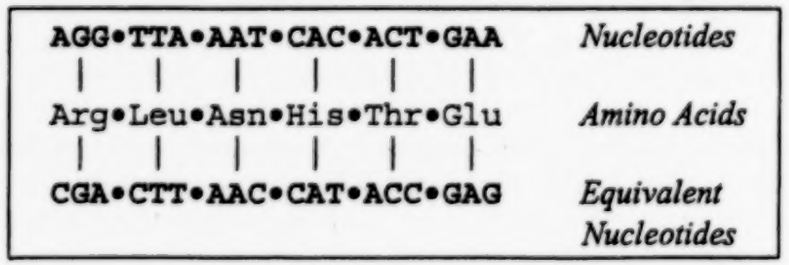

Without a doctrine of equivalents, a gene patent would be valueless unless it claimed every equivalent sequence of nucleotides. Competitors could infringe simply by substituting nucleotides with others known to be interchangeable. A patentee would need to disclose and claim every variant to prevent such unscrupulous copying. Mathematics alone make describing every possible variant impractical. *See In re Bell*, 991 F.2d 781, 784 (Fed. Cir. 1993) (noting that 10^{36} nucleotide sequences could encode a protein called IGF). While no doubt a computer could be programmed to print out every analog, the resulting patent claims would be a stack of paper miles high, and would overwhelm the PTO, as well as those who track patents, with their sheer bulk.[6]

Protein patents present a similar problem. As the Federal Circuit noted in analyzing a patent claim to the protein erythropoietin, "over 3,600 different [protein] analogs can be made by substituting at only a single amino acid position, and over a million different analogs can be made by substituting three amino acids." *Amgen, Inc. v. Chugai Pharm. Co.*, 927 F.2d 1200, 1213 (Fed. Cir. 1991). A substitution of one amino acid (*e.g.*, leucine) with another amino acid with similar chemical characteristics (*e.g.*, valine) often results in an insubstantially different protein. Even some additions or deletions of amino acids from the sequence of the protein will yield a functionally equivalent protein. Many analogs are functionally indistinguishable, and no purpose would be served by requiring their disclosure.

---

[6] The difficulties of examining DNA and protein patents have forced the PTO to adopt special rules for the presentation of nucleotide or amino acid sequence disclosures. 37 C.F.R. §§ 1.821 et seq. (1999); U.S. Department of Commerce, Patent & Trademark Office, *Manual of Patent Examining Procedure* §§ 2420 et seq. (rev. ed. Feb. 2000).

One of the *Festo* majority wrote separately to express his opinion that the biotechnology industry's special need for the doctrine of equivalents was "largely theoretical." *Festo*, 234 F.3d at 597 (Lourie, J., concurring). This is not correct, and a recent decision demonstrates why the biotechnology industry needs a vital doctrine of equivalents.

Amgen obtained a series of patents relating to a recombinant DNA product similar to the natural protein erythropoietin (EPO) – a protein described as being made up of 166 amino acids.[7] *See Amgen, Inc. v. Hoechst Marion Roussel*, 126 F.Supp. 2d 69, 132-133 (D. Mass. 2001) ("*Hoechst*"). A competitor engineered cells to produce a variant that was 165 amino acids in length, missing only the last amino acid. *See id.* at 133. Thus, Amgen's claim was found not literally infringed. But, after applying the "function-way-result" test, the *Hoechst* court determined that the competitor's variant was equivalent to the claimed EPO. *Id.* at 134.

Hoechst demonstrates that skilled biotechnologists can readily recognize and create proteins (and DNA molecules) of equivalent function by making insubstantial changes to a claimed sequence. Amgen's inventors disclosed how to make a protein useful for treating many disease conditions, and their disclosure allowed competitors to readily create an equivalent protein through an insubstantial modification. Without a doctrine of equivalents, the value of Amgen's patent would have been lost, even though the deletion of the single amino acid created a molecule which is, for all known relevant biological purposes, the "same" protein. The concern of the

---

[7] The patent at issue – like many based on an early disclosure of a biotechnology invention – described a protein (or DNA) sequence and contained broad functional language describing obvious variants.

biotechnology industry over the loss of the doctrine of equivalents is very real indeed.[8]

II. THE NEW RULES ANNOUNCED IN *FESTO* SHOULD NOT BE APPLIED RETROACTIVELY

Festo overturns the settled expectations of patent applicants based on precedent regarding the doctrine of equivalents. The *Festo* majority announced three new rules of law: (1) that a patentee who amends a claim for any reason relating to a statutory patentability requirement is subject to prosecution history estoppel, *Festo*, 234 F.3d at 566; (2) that voluntary amendments will create estoppel, *id.* at 568; and (3) that prosecution history estoppel creates a complete bar to application of the doctrine of equivalents, *id.* at 578. These rules "unfairly discount the expectations of a patentee who had no notice at the time of patent prosecution that such [rules] would apply." *Warner-Jenkinson*, 520 U.S. at 41 (Ginsburg, J., concurring).[9] Because these new rules rescind the valuable property interests of patentees who prosecuted patents in justifiable reliance on obtaining a reasonable scope of equivalents, the holding of *Festo* should only be applied prospectively – to applications filed after *Festo*.

[8] In 1999, Amgen had sales of $1.76 billion for its recombinant EPO product, Epogen(R). *Id.* at 77.

[9] On remand, the Federal Circuit acknowledged Justice Ginsburg's concerns and concluded that, when the record was silent as to the reason for an amendment, the patentee should have an "opportunity to establish the reason, if any, for a claim change." *Hilton Davis Chem. Co. v. Warner-Jenkinson, Inc.*, 114 F.3d 1161, 1163 (Fed. Cir. 1997) (*per curiam*).

A. Application of the *Chevron* Factors Demonstrates that *Festo* Should Only Be Applied Prospectively

Patentees who obtained their patents prior to *Festo* suffer a vital loss of property rights with the elimination of the doctrine of equivalents for a large class of claims and the delineation of a foolproof method to avoid infringement of such a claim. This Court has set forth three factors to consider in deciding whether a judicial decision would have a purely prospective effect: (1) whether the decision to be applied non-retroactively establishes a new principle of law, (2) whether retroactive application of the decision serves the purpose and effect of the decision, and (3) whether substantially inequitable results would occur if the decision is applied retroactively. *See Chevron Oil Co. v. Huson*, 404 U.S. 97, 106-107 (1971). *Festo* eliminates the doctrine of equivalents for a large proportion of the approximately 1.2 million patents in force today. If the dubious certainty of the complete bar is necessary, then *Festo* announced exactly the type of new rule that the Court has discretion to apply in a purely prospective manner.[10]

1. The Complete Bar Represents a New Principle of Law

Having found that the Supreme Court "has not fully addressed the [scope] of equivalents that is available once prosecution history estoppel applies," the *Festo* majority

[10] In *Harper v. Virginia Dept. of Taxation*, 509 U.S. 86, 97 (1993), this Court held that when it "applies a rule of federal law to the parties before it, that rule is the controlling interpretation of federal law and must be given full retroactive effect. . . . " However, the issue here is whether the complete bar rule of *Festo* should have a purely prospective effect. Justice O'Connor noted that "the question of pure prospectivity [was] not implicated by [*Harper*]." *Id.* at 116 (O'Connor, J., dissenting).

concluded that it "must independently decide the issue." *Festo*, 234 F.3d at 571. After analyzing a long line of Federal Circuit decisions applying a "flexible bar" approach – that the range of equivalents is limited but not eliminated by prosecution history estoppel – the *en banc* majority overruled its prior decisions regarding the scope of prosecution history estoppel. *Id.* at 574. By overruling a long line of decisions upon which patentees relied, *Festo* completely changed the legal landscape for patentees and their competitors. *See id.* at 612-615 (Michel, J., dissenting in part) (collecting more than fifty Federal Circuit cases applying the flexible bar approach).

2. Retroactive Application of *Festo* Does Not Promote the Goals of Certainty and Promoting Innovation

If certainty in the scope of patent claims is the goal of the complete bar rule, that purpose is not advanced by applying the rule retroactively to patent applications filed before *Festo*. The premise underlying the new rule is that literal claim scope is readily ascertainable while the scope of the doctrine of equivalents is not. This is demonstrably wrong. The inherent limits in the ability of language to describe inventions create an inevitable amount of uncertainty at the borders of patent claims, whether the infringement asserted is literal or equivalent.

For example, in *Key Pharms. v. Hercon Lab. Corp.*, 161 F.3d 709, 716-17 (Fed. Cir. 1998), the Federal Circuit approved the use of extrinsic evidence to construe the phrase, "a pharmaceutically effective amount." The intrinsic record (the patent and prosecution history) contained no evidence on the point. *Id.* at 718. It can be no less certain to rely entirely on *extrinsic* evidence to determine the literal scope of a patent than to ascertain a scope of equivalents based on the *intrinsic* record.

Applying *Festo* retroactively also does not increase the certainty as to the scope of claims that have issued

after argument by the applicant. "Arguments made voluntarily during prosecution may give rise to prosecution history estoppel if they evidence a surrender of subject matter." *Festo*, 234 F.3d at 568. Accused infringers will now assert that arguments made during prosecution surrender subject matter, while patentees will argue the opposite. Courts will still have to make the difficult ultimate determination whether an argument made during prosecution surrenders claim scope. *See Athletic Alternatives, Inc. v. Prince Mfg., Inc.*, 73 F.3d 1573, 1582 (Fed. Cir. 1996) (noting that equivocal nature of argument during prosecution made it difficult to determine whether applicant surrendered subject matter).

Nor will any increased "certainty" in the scope of already-issued patents foster the purpose of promoting innovation. *See Festo*, 234 F.3d at 577. The "new rule hands the unscrupulous copyist a free ride on potentially valuable patented technology, as long as the copyist merely follows the prosecution history roadmap and makes a change, no matter how trivial or insubstantial, to an element otherwise covered by such a narrowed claim limitation." *Id.* at 627 (Linn, J., dissenting in part). Any rule that favors a copyist lessens the incentive to undertake the risks involved in invention. *See Graver Tank*, 339 U.S. at 607 (noting that limiting scope of claims to their literal language "would foster concealment rather than disclosure of inventions"); *see also Festo*, 234 F.3d at 639 (Newman, J., dissenting in part). Experience since *Winans* and *Graver Tank* demonstrates that a healthy range of equivalents promotes, rather than hinders, innovation.

3. *Festo* Retroactively Alters the Bargain Between the Patentee and the Government

Reliance on the flexible bar rule now leaves many patentees with worthless patents if *Festo* is applied retroactively. This Court acknowledged that the PTO also may

have relied on a flexible rule of estoppel when deciding whether to request an amendment to a claim. *See Warner-Jenkinson*, 520 U.S. at 32 n.6. If a complete bar applies, the typical patent prosecution practice would leave a patentee with claims that had no range of equivalents because the practice has been to claim broadly in the initial application and then arrive at an agreeable set of claims through negotiation with the examiner. *See Festo*, 234 F.3d at 592 (Plager, J., concurring). The complete bar rule thus reverses the rules of the game for most existing patents.

The patent process is a bargain between the inventor and the Government. The inventor agrees to disclose an invention to the public in exchange for the Government's agreement to grant a patent on the invention for a term of years. *See Kewanee Oil*, 416 U.S. at 481. *Festo* retroactively takes away from patentees part of the consideration they received from the Government before allowing their patent to be published. Thus, *Festo* destroys the reliance interest of patentees and instead benefits copyists who add nothing of value to the technology.

The injustice is clearer still in a rapidly-advancing industry like biotechnology. A consistent justification for the doctrine of equivalents is to accommodate "after-arising technology." *See Warner-Jenkinson*, 520 U.S. at 37. "Because after-arising technology was not in existence during the patent application process, the applicant could not have known of it, let alone surrendered it." *Festo*, 234 F.3d at 620 (Rader, J., dissenting in part). Restricting patentees to the literal language of the patent claim and allowing competitors to use after-developed equivalents with impunity would also render the vast majority of current biotechnology patents "hollow and useless." *Graver Tank*, 339 U.S. at 607.

The only way for an applicant to avoid estoppel under *Festo* is to show from the record that an amendment was not made for reasons of patentability. *Festo*, 234

F.3d at 586. However, "a patentee would have had little incentive to insist that the reasons for all modifications be memorialized in the file wrapper as they were made." *Warner-Jenkinson*, 520 U.S. at 41 (Ginsburg, J., concurring). And patentees have no way now to go back in time and supplement the record to comply with the new rule. Thus, *Festo* renders the "rebuttable presumption" of *Warner-Jenkinson* an absolute presumption. *See Festo*, 234 F.3d at 632 (Newman, J., dissenting in part).

During the prosecution process, patentees were entitled to rely on the existing law regarding the doctrine of equivalents in deciding whether to accept the bargain offered by the Government. As stated by Justice Frankfurter, "We should not indulge in the fiction that the law now announced has always been the law and, therefore, that those who did not avail themselves of it waived their rights." *Griffin v. Illinois*, 351 U.S. 12, 26 (1956) (Frankfurter, J., concurring). This is not a case where a court interpreted a statute for the first time. Rather, prosecution history estoppel is a judicially-created doctrine that has been changed, more akin to Congress amending a law. When Congress does amend a law affecting property rights, it takes into account the preexisting rights and the need to grandfather such rights. By imposing *Festo* retroactively this Court would punish patentees for behaving rationally under existing law.

B. Retroactive Application of *Festo* Deprives Patentees of Their Property Rights Without Due Process

In giving its new rules retroactive effect, the Federal Circuit has caused a significant diminution in value in a large percentage of the patents in force today. An inventor has a natural right to his or her discoveries. *See Graham v. John Deere Co.*, 383 U.S. 1, 6 (1966). "[The inventor] may keep his invention secret and reap its fruits indefinitely." *Bonito Boats, Inc. v. Thunder Craft Boats, Inc.*,

489 U.S. 141, 150 (1989). Or the inventor can disclose the invention and enjoy a time-limited period of exclusivity from the Government, including, exclusion of those who practice an insubstantial change to the invention. *Festo* eliminates a substantial portion of that exclusivity and significantly diminishes the value of most existing patents.

A patent provides a right to exclude others from practicing the claimed invention for a limited period of time. *See* 35 U.S.C. § 154 (2000). If Congress shortened the patent term retroactively, then the owner of an existing patent would likely be able to seek just compensation under the Takings Clause of the Fifth Amendment.[11] The *Festo* decision similarly takes a portion of the patentee's property by severely limiting the right to exclude. Retroactive application of *Festo* represents an uncompensated judicial taking of existing property rights. *See Hughes v. Washington*, 389 U.S. 290, 298 (1967) (Powell, J., concurring) (reasoning that the Takings Clause applies to courts as well as legislatures).

Expressed another way, *Festo* represents the taking of a valuable trade secret by inducing its disclosure in exchange for certain compensation, and then later taking back a portion of that compensation. In *Ruckelshaus v. Monsanto Co.*, 467 U.S. 986 (1984), Monsanto argued that forced disclosure of its trade secrets pursuant to administrative regulations would constitute a taking requiring just compensation. In response, this Court held that a trade secret was a property interest protected by the Takings Clause. *Id.* at 1003-1004. Because the Court found that the economic value to Monsanto was its competitive

---

[11] *Cf., e.g., In re Berg*, 140 F.3d 1428, 1435 n.9 (Fed. Cir. 1998) (patents originally filed before June 8, 1995 were entitled to the *longer* of seventeen years from the date of issue or twenty years from the date of filing pursuant to amendment to 35 U.S.C. § 154 enacted by Pub. L. 103-465 § 532(a)(1) (1994)).

advantage by virtue of exclusive access to its trade secrets, it held that the EPA's use or disclosure of Monsanto's trade secrets was a taking for public use. *Id.* at 1016.

In the patent context, an inventor predicates the disclosure of an invention, which until such disclosure is held as a trade secret, in exchange for exclusivity for the disclosed invention and a reasonable scope of equivalents. "A State cannot be permitted to defeat the constitutional prohibitions against taking property without due process of law by the simple device of asserting retroactively that the property it has taken never existed at all." *Stevens v. City of Cannon Beach*, 510 U.S. 1207, 114 S.Ct. 1332, 1334 (1994) (Scalia, J., dissenting as to denial of writ of *certiorari*). By announcing the complete bar rule, the Federal Circuit has similarly extinguished existing property rights in patents by holding such rights never existed.

Patentees now subject to the complete bar rule have not had an opportunity to be heard "at a meaningful time and in a meaningful manner" as required by the Due Process Clause of the Fifth Amendment. *Mathews v. Eldridge*, 424 U.S. 319, 333 (1976); *cf. Brinkerhoff-Faris Trust & Sav. v. Hill*, 281 U.S. 673, 679-680 (1930) (holding that deprivation of property rights by state judiciary without notice and opportunity to be heard violates Due Process Clause of Fourteenth Amendment). A patentee does not now have the option of retreating from the bargain and treating an invention previously disclosed in a patent as a trade secret. *See Kewanee Oil*, 416 U.S. at 490 (inventor could choose to treat invention as trade secret). Because the rules have been changed for owners of existing patents without an opportunity to be heard, the Court should consider whether the Due Process Clause prevents the retroactive application of *Festo*.

CONCLUSION

Patent protection and the doctrine of equivalents have played a particularly important role in promoting the advancement of the biotechnology and biopharmaceutical industry. *Festo* substantially changes the rules of the game for already issued patents and decreases the incentive to apply for patents in the future. For the foregoing reasons, the petition should be granted.

Respectfully submitted,

DONALD S. CHISUM
Counsel of Record
755 Page Mill Road
Palo Alto, California 94304
(650) 813-5600

CHIRON CORPORATION
ROBERT P. BLACKBURN
4560 Horton Street
Emeryville, California 94608
(510) 655-8730

Counsel for Amici Curiae
Chiron Corporation,
Guilford Pharmaceuticals,
Inc., and XOMA

CHIRON CORPORATION

Founded in 1981 by scientists at the University of California, Chiron Corporation ("Chiron"), with more than three thousand employees, is one of the world's largest biotechnology companies. Chiron applies biotechnology and other techniques of modern biology, including the rapidly expanding field of genomics, to develop products intended to lower the overall cost of healthcare and improve the quality of life by diagnosing, preventing, and treating disease. To carry out this mission, Chiron invests heavily in biological research – nearly $1.2 billion in the last four years. In return for its investment in research and development over the past twenty years, Chiron's inventions include drugs to treat cancer, multiple sclerosis, and cystic fibrosis; vaccines for hepatitis B, meningococcal C, and whooping cough; and blood tests used worldwide to screen donated blood for HIV and hepatitis C virus.

As do other biotechnology companies, Chiron depends on patent protection to achieve adequate returns on its research outlay to encourage stockholder investment. Chiron now owns over three thousand United States and foreign patents. Chiron has taken a lead role in litigating issues related to biotechnology patent protection, including both infringement actions against companies that seek to use its patented technologies without a license and appeals from Patent and Trademark Office ("PTO") decisions related to issues of patentability. *See, e.g., Genentech, Inc. v. Chiron Corp.*, 220 F.3d 1345 (Fed. Cir. 2000); *In re Bell*, 991 F.2d 781 (Fed. Cir. 1993). Chiron also appeared as *amicus curiae* in *Warner-Jenkinson Co., Inc. v.*

Hilton Davis Chem. Co., 520 U.S. 17 (1997). From its vantage point on the cutting edge of biotechnology, science, and law, Chiron has a unique perspective on the necessity of the doctrine of equivalents to ensure adequate protection for biotechnology inventions.

GUILFORD PHARMACEUTICALS, INC.

Guilford Pharmaceuticals Inc. is a small biopharmaceutical company located in Baltimore, Maryland. Guilford Pharmaceuticals was incorporated in 1993 and presently employs more than 300 people. The company focuses its research and development on nervous system disorders, such as Parkinson's Disease, and biocompatible polymeric drug delivery systems for use in, *e.g.*, treating cancer. It is also developing delivery systems for analgesics. Guilford has one commercial product on the market – GLIADEL® Wafers.

Guilford holds more than 100 U.S. patents and has approximately 130 pending U.S. applications. It also has foreign counterparts to its U.S. cases.

Although Guilford is not a biotechnology company, like biotechnology companies, Guilford relies very heavily on patent protection in recouping its costs of bringing new drugs to the market and in persuading investors to provide necessary capital to support its research and development. Guilford Pharmaceuticals has no interest in either of the parties to this litigation or in the outcome of this case, other than its interest in seeking correct and consistent interpretation of the law relating to the doctrine of equivalents and in ensuring that valuable patents are not easily and unfairly circumscribed.

XOMA

XOMA develops and manufactures innovative biopharmaceuticals for disease targets that include cancer, immunological and inflammatory disorders and infectious diseases. Late-stage product collaborations include: 1) Genentech, Inc. to develop the Xanelim™ anti-CD11a monoclonal antibody product, in Phase III for psoriasis and in Phase I/II for kidney transplant rejection; 2) Baxter Healthcare Corporation to develop NEUPREX® (a systemic formulation of rBPI21) for meningococcemia (Phase III) and Crohn's disease (Phase II) and other indications; and 3) Onyx Pharmaceuticals, Inc. to develop and manufacture its CI-1042 product for cancer (Phase II and III). Earlier-stage programs include: ING-1, a Human Engineered™ antibody in Phase I studies in cancer patients; Genimune™, a Human Engineered™ antibody-based gelonin fusion product to treat autoimmune diseases and immunological cancers; Mycoprex™ for treatment of fungal infections; and BPI-derived anti-angiogenic compounds for retinal disorders. XOMA also has several proprietary enabling technologies, including the targeted gelonin fusion technology, bacterial cell expression systems for the manufacture of recombinant antibodies and other proteins, and the Human Engineering™ method for reducing the immunogenicity of antibodies.

No. 00-1543

Supreme Court, U.S.
FILED
MAY 9
CLERK

IN THE

Supreme Court of the United States

FESTO CORPORATION,

Petitioner,

v.

SHOKETSU KINZOKU KOGYO KABUSHIKI CO., LTD.,
a/k/a SMC Corporation, and SMC Pneumatics, Inc.,

Respondents.

ON PETITION FOR A WRIT OF CERTIORARI TO THE
UNITED STATES COURT OF APPEALS FOR THE FEDERAL CIRCUIT

BRIEF *AMICUS CURIAE* OF THE CHAMBER OF COMMERCE OF THE UNITED STATES IN SUPPORT OF THE PETITION

Of Counsel:

ROBIN S. CONRAD
NATIONAL CHAMBER
LITIGATION CENTER, INC.
1615 H Street
Washington, D.C. 20062
(202) 463-5337

BERT W. REIN
WILEY, REIN & FIELDING
1776 K Street NW
Washington, D.C. 20006
(202) 719-7000

GERALD SOBEL
Counsel of Record
RICHARD G. GRECO
KAYE SCHOLER LLP
Attorneys for Amicus Curiae
425 Park Avenue
New York, NY 10022
(212) 836-8000

166967

COUNSEL PRESS
(800) 274-3321 • (800) 359-6859

TABLE OF CONTENTS

	Page
Table of Cited Authorities	iii
Brief *Amicus Curiae* of the Chamber of Commerce of the United States in Support of *Certiorari*	1
Interest of *Amicus Curiae*	1
Reasons for Granting the Writ	3
I. The Federal Circuit Decision Will Seriously Affect The Value Of Existing Patents	3
A. The Decision Below Significantly Changes Settled Expectations Regarding Patent Enforceability And The Value Of Existing Patents.	3
B. Copying with Minor Variation Could Proliferate Under The New Rule Announced By The Federal Circuit Majority.	8
II. The Federal Circuit Decision Will Encourage Changes In Patent Prosecution Practices That Will Greatly Affect Both Applicants And The Patent Office.	10
III. The Federal Circuit Has Substantially Modified This Court's And Its Own Precedent With Only Limited Explanation.	12

Contents

		Page
A.	The Federal Circuit's Curtailment Of The Doctrine Of Equivalents Departs From This Court's Precedents And Scores Of Federal Circuit Precedents.	12
B.	The Federal Circuit's Decision To Curtail The Doctrine Of Equivalents Is A Departure From *Stare Decisis* Which Requires Special Justification.	13
C.	Any Revision Of Core Patent Rights Might Best Be Left To Congress.	15
Conclusion		17

TABLE OF CITED AUTHORITIES

	Page
Cases:	
Goodyear Dental Vulcanite Co. v. Davis, 102 U.S. 222 (1880)	12
Graver Tank & Mfg. Co. v. Linde Air Products Co., 339 U.S. 605 (1950)	5, 8
Hoganas AB v. Dresser Indus., Inc., 9 F.3d 948 (1993)	4
Hubbell v. United States, 179 U.S. 77 (1900)	13
Hughes Aircraft Co. v. United States, 717 F.2d 1351 (Fed. Cir. 1983)	4, 5
Hurlbut v. Schillinger, 130 U.S. 456 (1889)	12
Kewanee Oil Co. v. Bicron Corp., 416 U.S. 470 (1974)	8
Litton Sys. Inc. v. Honeywell Inc., 140 F.3d 1449 (Fed. Cir. 1998)	4, 13
Miranda v. Arizona, 384 U.S. 436 (1966)	14
Monsanto Co. v. Spray-Rite Serv. Corp., 465 U.S. 752 (1984)	8
Phoenix Caster Co. v. Spiegel, 133 U.S. 360 (1890)	12

Cited Authorities

	Page
Royer v. Coure, 146 U.S. 524 (1892)	12
Shepard v. Carrigan, 116 U.S. 593 (1886)	12
Sutter v. Robinson, 119 U.S. 530 (1886)	12
Union Paper-Bag Machine Co. v. Murphy, 97 U.S. 120 (1878)	7
United States v. International Bus. Mach. Corp., 517 U.S. 843 (1996)	14
United States v. Texas, 507 U.S. 529 (1993)	16
Warner-Jenkinson Co. v. Hilton Davis Chemical Co., 520 U.S. 17 (1997)	*passim*
Other Authority:	
Manual of Patent Examining Procedure § 608.01(m) (7th ed. 1998)	11

BRIEF *AMICUS CURIAE* OF THE CHAMBER OF COMMERCE OF THE UNITED STATES IN SUPPORT OF *CERTIORARI*

This brief *amicus curiae* is respectfully submitted in support of *certiorari* pursuant to Rule 37.2.[1]

INTEREST OF *AMICUS CURIAE*

The Chamber of Commerce of the United States of America (the "Chamber"), a non-profit corporation organized and existing under the laws of the District of Columbia, is the largest federation of business, trade and professional corporations in the United States. The Chamber represents an underlying membership of more than three million businesses and organizations, with 140,000 direct members of every size, in every business sector, and from every geographic region of the country. An important function of the Chamber is to represent the interests of its members by filing amicus briefs in cases involving issues of national concern to American business.

The Chamber believes that the more than 1,200,000 United States patents in force and in process — a large percentage of them held by American businesses — are a critical part of the nation's capital base. These patents and the Patent System's ability to encourage future invention are key elements in America's future competitiveness in a global

1. Pursuant to Rule 37.6, *Amicus Curiae* states that no counsel for a party authored this brief in whole or in part, and no person or entity other than *Amicus Curiae*, its counsel and members made a monetary contribution to the preparation or submission of the brief. This brief is filed with the consent of the parties. Written consents will be filed concurrently with this brief.

economy increasingly driven by intellectual property. The Chamber recognizes that the value of these patent assets depends entirely on their enforceability by judicial process and is committed to ensuring an available, equitable and meaningful enforcement regime throughout the world. The Chamber also recognizes that the scope of patent protection must be reasonable so as not to suppress legitimate competitive innovation or unduly limit competition and Chamber members find themselves as both plaintiffs and defendants in patent infringement actions.

The decision of the Federal Circuit in this case substantially modifies a century and-a-half-old balance struck by this Court between the interests of patent owners and those of competitor-innovators. The decision significantly changes settled expectations, the value of existing patent portfolios and incentives for investment and innovation; it also encourages practitioners to modify their patent prosecution practices in ways that will greatly affect the functioning of the patent system. Nevertheless, the decision provides only a limited legal, equitable or economic foundation for the changed rule.

Given the longstanding involvement of this Court in shaping the doctrine of equivalents, the gravity of these issues and the deep division within the Federal Circuit reflected in the opinions below, the Chamber believes that the serious and weighty arguments advanced on both sides of this controversy warrant review and final resolution by this Court.

REASONS FOR GRANTING THE WRIT

I. THE FEDERAL CIRCUIT DECISION WILL SERIOUSLY AFFECT THE VALUE OF EXISTING PATENTS

A. The Decision Below Significantly Changes Settled Expectations Regarding Patent Enforceability And The Value Of Existing Patents.

After more than 50 Federal Circuit decisions to the contrary in the last 18 years, and 150 years of contrary teachings from this Court, the Federal Circuit's divided and "utterly unpredictable" *en banc* decision in *Festo Corp. v. Shokestu Kinzoku Kogyo Kabushiki Co.*, 234 F.3d 558, 619 (Fed. Cir. 2000) (Michel, J., concurring-in-part and dissenting-in-part), imposed a new and retroactive rule requiring patent infringement to be proved literally whenever a patent claim has been amended for any reason relating to any statutory criterion for obtaining a patent. The Federal Circuit majority effected this change by expanding the concept of "prosecution history estoppel" to foreclose patent coverage for any and all equivalents to amended claim elements without regard to whether surrender of equivalent subject matter was necessary to the patent grant or intended by the applicant. *Id.* at 586. In doing so, it converted an equitable doctrine, designed to foreclose patent holders from benefitting by taking inconsistent positions on the scope of their patent claims before the Patent and Trademark Office (PTO) and the Courts, into an inflexible limitation into the scope of more than 1,200,000 U.S. patents in force and in process.

The prior rule followed by the Federal Circuit since its inception and by this Court for more than a century was that the doctrine of equivalents applied to an amended claim, even one amended to avoid prior art, as well as an unamended claim. An applicant was estopped, however, from recovering under the doctrine of equivalents subject matter actually surrendered during patent prosecution to secure issuance of the claim. *See, e.g., Hughes Aircraft Co. v. United States*, 717 F.2d 1351 (Fed. Cir. 1983) ("*Hughes I*"); *Litton Sys. Inc. v. Honeywell Inc.*, 140 F.3d 1449, 1455 (Fed. Cir. 1998) ("The common practice of amending a claim during prosecution, even amending to overcome prior art, does not necessarily surrender all subject matter beyond the literal scope of the amended claim limitation.") (Both overruled by the decision below).

The standard for determining what was surrendered in applying prosecution history estoppel was held by the Federal Circuit to be "an objective one, measured from the vantage point of what a competitor was reasonably entitled to conclude, from the prosecution history, that the applicant gave up to procure issuance of the patent." *Hoganas AB v. Dresser Indus., Inc.*, 9 F.3d 948, 952 (1993); *see also Litton Sys. Inc.*, 140 F.3d at 1462 (The scope of subject matter surrendered by an amendment extended to "that which was deemed unpatentable in view of prior art" and "trivial variations of such prior art features.").

The *Festo* majority imposed a new rule. It held that if a claim were narrowed by amendment, the amended claim could not be infringed except by a literally exact copy of the claim elements affected by the amendment, unless the patentee demonstrated from the prosecution history record in the PTO that the amendment was unrelated to any aspect

of the statutory requirements of patentability. *Festo*, 234 F.3d at 586. Because the statutory requirements of patentability extend beyond distinguishing over prior art to matters such as definiteness of claim language, disclosure of the best mode, enablement, and written description, the new rule is likely to encompass virtually all amendments, whether or not significant in the prosecution. *Id.* at 566.

Patent applications are routinely amended during the examination process.[2] By ruling that amendments automatically surrender everything but their literal terms, the Federal Circuit majority substantively restricted the doctrine of equivalents, which was recently and unanimously re-endorsed by this Court in *Warner-Jenkinson Co. v. Hilton Davis Chemical Co.*, 520 U.S. 17 (1997), and has been fundamental to the U.S. patent system for a century-and-a-half.[3] Equivalence protection under *Festo* is fully available

---

2. As the Federal Circuit itself has observed, "[a]mendment of claims is a common practice in prosecution of patent applications," and "comparatively few claims [are] allowed exactly as originally filed. . . ." *Hughes I*, 717 F.2d at 1363; *accord Festo*, 234 F.3d at 638 n.3 ("[F]or simple inventions, at most 10-15% of patents are granted without claim amendment. . . . For complex inventions the percentage of unamended applications is vanishingly small.") (Newman, J., concurring-in-part and dissenting-in-part). Amendments are not infrequently submitted to add clarity, rather than narrow scope, and thus avoid an indefiniteness rejection.

3. The rationale for covering equivalents was described in practical terms by this Court in *Graver Tank & Mfg. Co. v. Linde Air Products Co.*, 339 U.S. 605, 607 (1950):

> [T]o permit imitation of a patented invention which does not copy every literal detail would be to convert the

(Cont'd)

only in the relative handful of instances where there was no amendment of the claims during patent prosecution.

While this Court, in *Warner-Jenkinson Co.*, 520 U.S. at 33, established a *rebuttable* presumption that an amendment was for a purpose related to patentability when the prosecution history contained no explanation of the reason for the amendment, the majority below made this presumption effectively *irrebuttable*. It held that only evidence from the prosecution history, which must be silent on the reason for the amendment before the presumption arises, can be used as evidence to rebut the presumption. "[T]he majority's ruling makes rebuttal impossible. . . ." *Festo*, 234 F.3d at 632 (Newman, J, concurring-in-part and dissenting-in part).

(Cont'd)

> protection of the patent grant into a *hollow and useless thing*. Such a limitation would leave room for — *indeed encourage* — the unscrupulous copyist to make *unimportant and insubstantial* changes and substitutions in the patent which, though adding nothing, would be enough to take the copied matter outside the claim, and hence outside the reach of law. One who seeks to pirate an invention . . . may be expected to introduce minor variations to conceal and shelter the piracy. *Outright and forthright duplication* is a dull and *very rare type of infringement*. To prohibit no other would place the inventor *at the mercy of verbalism* and would be subordinating substance to form. It would deprive him of the *benefit of his invention* and would *foster concealment* rather *than disclosure* of inventions, which is one of the primary purposes of the patent system. (Emphasis added).

This Court in *Warner-Jenkinson Co.*, 520 U.S. at 35, placed the importance of the doctrine of equivalents in protecting patent rights on the same plane as literal infringement: [T]here is no basis for treating an infringing equivalent any differently from a device that infringes the express terms of the patent. (Emphasis added).[4] The Court requested the Federal Circuit to "*refine* the formulation of the test for equivalence in the *orderly course of case-by-case determinations*," *id.* at 40 (emphasis added), with no suggestion of a mandate to effectively eliminate the doctrine.

The value of a patent is inextricably linked to the patent owner's ability to enforce it. When the scope of the enforcement rights is substantially narrowed, the value of patent portfolio assets is substantially diminished. In *Festo*, the Federal Circuit has overruled precedents decided as recently as 2000 and potentially reduced the asset base of American businesses by billions of dollars. *See* list of over fifty cases overruled by the majority opinion cited by Judge Michel in his partial dissent. *Festo*, 234 F.3d at 612-615.

Moreover, at least as to the enormous body of patents that remain in force, the financial consequences to industry of the Federal Circuit's decision are unavoidable. Existing patents were prosecuted under very different rules governing

---

4. The Court quoted with approval from its decision in *Union Paper-Bag Machine Co. v. Murphy*, 97 U.S. 120, 125 (1878):

> [T]he substantial equivalent of a thing, in the sense of the patent law, is the same as the thing itself; so that if two devices do the same work in substantially the same way, and accomplish substantially the same result, they are the same, even though they differ in name, form, or shape. *Warner-Jenkinson*, 20 U.S. at 35.

the consequences of amending patent claims than those adopted by the *Festo* majority, and there is nothing that patent owners can do to alter the historical Patent Office records (*i.e.*, the amendments) that will now be invoked to strip owners of valuable and, in many cases, essential enforcement rights. *Id.* at 619 (Michel, J., concurring-in-part and dissenting-in-part) (noting that the majority's abrupt and unpredictable imposition of a complete bar rule breaches faith with all patentees who have rights to an amended claim and who "had no way to avoid the harm that now befalls them"). *Compare Warner-Jenkinson Co.*, 520 U.S. at 41, where the retroactive effect of the much more limited development of a presumption regarding estoppel gave rise to concern in the concurring opinion of Justice Ginsburg, who stated: "The new presumption, if applied woodenly, might in some instances unfairly discount the expectations of a patentee who had no notice at the time of patent prosecution that such a presumption would apply."

B. Copying with Minor Variation Could Proliferate Under The New Rule Announced By The Federal Circuit Majority.

This Court has observed for a century-and-a-half, that literalism has the natural tendency of encouraging competitors to forego significant innovation in favor of the easier, faster, and less costly course of copying a successful invention with minor changes. *See, e.g., Graver Tank*, 339 U.S. at 607 (1950). The Court has also expressed concern that free-riding on another's investment is inconsistent with a well-functioning competitive market. *See, e.g., Monsanto Co. v. Spray-Rite Serv. Corp.*, 465 U.S. 752, 762-63 (1984); *Kewanee Oil Co. v. Bicron Corp.*, 416 U.S. 470, 480 (1974). As Judge Rader noted in dissent, the Federal Circuit's severe

limitation on the doctrine of equivalents elevates form over substance and will encourage would-be competitors to rely upon minor variations to avoid the reach of existing patents, with particularly troubling consequences in rapidly developing technology fields:

> [B]y barring all application of the doctrine of equivalents for amended claims, this court does not account at all for the primary role of the doctrine. All patent protection for amended claims is lost when it comes to after-arising technology, while the doctrine of equivalents will continue to accommodate after-arising technology in unamended claims. *Festo*, 234 F.3d at 619 (Rader, J., concurring-in-part and dissenting-in-part).

The rule announced by the *Festo* majority facilitates copying of an invention because an infringer can review a patent prosecution history, identify an amended limitation, and then make a trivial change to attempt to bring the product outside of the literal meaning of the amended claim limitation. *Id.* at 616-617 (Michel, J., concurring-in-part and dissenting-in-part).

This Court possesses and has exercised ultimate authority for the interpretation and enforcement of the nation's constitutionally-grounded patent laws. Given the fundamental policy interests at stake, the divided views in the Federal Circuit, and the apparent departure from this Court's precedent, the business community as a whole would benefit from a full and final disposition of the issues presented in *Festo* by this Court.

II. THE FEDERAL CIRCUIT DECISION WILL ENCOURAGE CHANGES IN PATENT PROSECUTION PRACTICES THAT WILL GREATLY AFFECT BOTH APPLICANTS AND THE PATENT OFFICE.

Another predictable consequence of the new rule imposed by the court below will be the imposition of additional administrative burdens on the Patent Office as applicants resort to expensive and time-consuming strategies in an attempt to minimize the rule's impact.

Because applicants must assume no future reliance on the doctrine of equivalents in enforcement proceedings if virtually *any* amendment is made to a claim during the application process, they will strive to secure unamended claims. To this end, applicants first will be encouraged to file numerous, separate applications for the same invention with claims of increasing breadth to enhance the prospect of allowance without amendment. *Second*, the drafting process will be encumbered by attempts to cover by literal language every known, conceivable equivalent, a task that can be more or less daunting depending upon numerous factors that are beyond the applicant's control. For example, as Judge Michel noted in dissent, in the rapidly developing area of biotechnology patents, an applicant's attempt to adequately protect its innovation by writing a literal claim will "put[] an impossible burden on both the applicant and the PTO." *Id.* at 617. Indeed, it is precisely because of concerns that the written word may not completely capture the essence of an invention or anticipate future changes in technology that the doctrine of equivalents has been a part

of patent law since the 19th century.[5] *Third*, under the new rule applicants will have a much greater incentive to appeal any amendments proposed by the PTO during the examination process because of the substantial loss of substantive rights that virtually any amendment now threatens.

The inevitable, if unintended, consequences of the decision below on the already burdened Patent Office may be to force patent applicants to resist an Examiner's proposals for an amendment of a claim, rather than work to compromise with the Examiner on claim language. Without a massive infusion of new resources, the patent application process may well be prolonged, thus depreciating the value of patentable inventions now protected for only twenty years from the filing date. These consequences also support review by this Court.

---

5. In recognition of the futility of trying to predict all equivalents during the patent process, this Court ruled in *Warner-Jenkinson*, 520 U.S. at 37, that "the proper time for evaluating equivalency — and thus knowledge of interchangeability between elements — is at the time of infringement, not at the time the patent was issued." Because patent claims address with verbal formulations innovations in rapidly evolving, highly complex technology fields, and must describe the invention in one sentence (Manual of Patent Examining Procedure § 608.01(m) (7th ed. 1998)), it is difficult to overstate the importance of the doctrine of equivalents to an equitable regime of patent protection and enforcement.

III. THE FEDERAL CIRCUIT HAS SUBSTANTIALLY MODIFIED THIS COURT'S AND ITS OWN PRECEDENT WITH ONLY LIMITED EXPLANATION.

A. The Federal Circuit's Curtailment Of The Doctrine Of Equivalents Departs From This Court's Precedents And Scores Of Federal Circuit Precedents.

Judge Michel's dissent below, highlighted the difficulty of squaring the Federal Circuit's curtailment of the doctrine of equivalents with settled Supreme Court authority[6] and the

6. Many Supreme Court decisions follow a rationale that is contrary to the newly announced rule. *See Goodyear Dental Vulcanite Co. v. Davis*, 102 U.S. 222 (1880) (stating in *dictum* that an amended claim could be infringed by an equivalent); *Hurlbut v. Schillinger*, 130 U.S. 456 (1889) (applicant disclaimed by reissue a method of arranging concrete pavement blocks wherein nothing was inserted between the blocks, and the Court held that a trowel used to separate the blocks infringed the claim requiring the use of tar paper or its equivalent between the blocks); *Shepard v. Carrigan*, 116 U.S. 593, 598 (1886) (claim to a skirt protector was amended, but the Court inquired of the accused product "whether an omitted part is supplied by an equivalent device or instrumentality"); *Sutter v. Robinson*, 119 U.S. 530, 541 (1886) (claim was amended to require the use of a wooden, rather than metal, vessel, but Court still considered whether accused devices met limitation by equivalence); *Phoenix Caster Co. v. Spiegel*, 133 U.S. 360 (1890) (claim to a furniture caster had been amended in several respects, but the Court still determined that "there is not in the Yale caster any equivalent" to the amended limitation); *Royer v. Coure*, 146 U.S. 524, 531 (1892) (process claim was amended, but the Court approved of examination of the accused process to determine whether it followed

(Cont'd)

Federal Circuit's own precedent on prosecution history estoppel. Prior to *Festo*, the Federal Circuit itself recognized that this Court's precedents "do[] not necessarily limit a patentee to the literal language of the amended element — even when an amendment has been made to overcome the prior art." *Litton Sys. Inc.*, 140 F.3d at 1455-1456; *Hughes I*, 717 F.2d at 1362 ("We, *as has the Supreme Court*, reject that view [confining amended claims to their literal terms] as a wooden application of estoppel, negating entirely the doctrine of equivalents. . . .") (emphasis added). In fact, the majority's decision in *Festo* expressly overrules at least 52 Federal Circuit decisions handed down between the establishment of that Court in 1982 and the year 2000. *Festo*, 234 F.3d at 613-615 (Michel, J., concurring-in-part and dissenting-in-part).

B. The Federal Circuit's Decision To Curtail The Doctrine Of Equivalents Is A Departure From *Stare Decisis* Which Requires Special Justification.

The Federal Circuit's departure from controlling Supreme Court precedent and its express overruling of 18 years of Federal Circuit precedent was controversial and

(Cont'd)
"substantially the same process."); *Hubbell v. United States*, 179 U.S. 77 (1900) (A claim to a bullet cartridge was amended repeatedly, but in examining the accused product the Court considered "whether an omitted part is supplied by an equivalent device or instrumentality."). In all of these cases the Court examined whether an accused product contained an amended claim limitation by equivalence, an inquiry that would have been unnecessary if the rule of the majority below — completely barring any equivalence when a claim limitation is amended — applied.

demanded the compelling foundation normally required for abandoning principles of *stare decisis*. As this Court recently observed in refusing to overrule *Miranda v. Arizona*, 384 U.S. 436 (1966):

> Whether or not we would agree with *Miranda's* reasoning and its resulting rule, were we addressing the issue in the first instance, the principles of *stare decisis* weigh heavily against overruling it now. . . . While " '*stare decisis* is not an inexorable command.' " *State Oil Co. v. Khan*, 522 U.S. 3, 20 (1997) (quoting *Payne v. Tennessee*, 501 U.S. 808, 828 (1991)), particularly when we are interpreting the Constitution, *Agostini v. Felton*, 521 U.S. 203, 235 (1997), "even in constitutional cases, the doctrine carries such persuasive force that we have always required a departure from precedent to be supported by some 'special justification.' " *Dickerson v. United States*, 120 S. Ct. 2326, 2336 (2000).

Long-standing precedent may be overruled when "governing decisions are unworkable or badly reasoned," when facts and circumstances have changed, or when intervening precedent has eroded the original rule. *See, e.g., United States v. International Bus. Mach. Corp.*, 517 U.S. 843, 856 (1996). By contrast, a rule like the doctrine of equivalents — which has been a cornerstone of the common law of patents and the expectations of patent owners for 150 years — should not be sharply curtailed without a compelling rationale.

Although the majority below acknowledged that it was overruling long-standing precedent and expressed awareness

of "the Supreme Court's teaching that binding precedent is not lightly to be discarded," it did not offer any detailed rationale or changed circumstances in support of its decision. *Festo*, 234 F.3d at 575. It did note that its "decision to reject the flexible bar approach . . . comes after nearly twenty years of experience in performing our role as the sole court of appeals for patent matters," and claimed *without citation to any authority* or study that "[the] problem with the flexible bar approach is that it is virtually impossible to predict before the decision on appeal where the line of surrender is drawn." *Id.* While thus concluding that applying the doctrine of equivalents to amended claim limitations was "unworkable," *id.*, the majority gave little scrutiny to the retroactive consequences that would inure to existing patent owners as a result of its decision, the fortuity of tying the loss of valuable patent rights to the mere existence of any claim "amendment," the impact on innovation, and the offsetting administrative burdens that will fall upon the PTO because of the sweeping estoppel regime imposed by the new rule.

C. Any Revision Of Core Patent Rights Might Best Be Left To Congress.

In *Warner-Jenkinson Co.*, this Court made clear that the history of the doctrine of equivalents compels the conclusion that any attempt to abandon the doctrine is properly left to Congress:

> [T]he lengthy history of the doctrine of equivalents *strongly* supports adherence to our refusal in *Graver Tank* to find that the Patent Act conflicts with that doctrine. Congress can legislate the doctrine of equivalents out of existence any time it chooses. The various policy arguments

> now made by both sides are thus best addressed to Congress, not this Court.

Id. at 28 (emphasis added); *cf. United States v. Texas*, 507 U.S. 529, 534 (1993) (noting "presumption favoring the retention of long-established and familiar principles, except when a statutory purpose to the contrary is evident") (citation omitted).

While the policy concerns expressed by the *Festo* majority should be considered if supported by empirical evidence, the Federal Circuit may not be the appropriate forum for making final policy judgments involving doctrinal changes that go to the core of patent protection and have far-reaching implications throughout American industry. If, as the majority held, the interplay of the doctrine of equivalents and prosecution history estoppel requires fundamental re-examination, Congress could conduct the necessary economic studies, hear the concerns pertinent to affected industries, weigh the policy arguments, and assess how best to foster both continued technological advancement and vigorous competition in the national interest. Moreover, by amending existing patent legislation, Congress could balance competing interests, address retroactivity and implement policy judgments with far more precision than a court exercising its common law powers. In the case of amended claims, policymakers may well conclude that the alleged difficulty of having to decide close issues of what was "actually surrendered" can be cured by an approach less draconian than *Festo* which preserves the historic values of the doctrine of equivalents, protects the legitimate settled expectations of existing patent holders and avoids imposing additional administrative burdens on the Patent System.

CONCLUSION

Amicus Curiae The Chamber of Commerce of the United States of America respectfully submits that *certiorari* should be granted to resolve the important issues raised by this case.

Respectfully submitted,

GERALD SOBEL
Counsel of Record
RICHARD G. GRECO
KAYE SCHOLER LLP
Attorneys for Amicus Curiae
425 Park Avenue
New York, NY 10022
(212) 836-8000

Of Counsel:

ROBIN S. CONRAD
NATIONAL CHAMBER
LITIGATION CENTER, INC.
1615 H Street
Washington, D.C. 20062
(202) 463-5337

BERT W. REIN
WILEY, REIN & FIELDING
1776 K Street NW
Washington, D.C. 20006
(202) 719-7000

Supreme Court, U.S.
FILED
MAY 9 2001
OFFICE OF THE CLERK

(12)

No. 00-1543

In the
Supreme Court of the United States

FESTO CORPORATION,
PETITIONER,

v.

SHOKETSU KINZOKU KOGYO KABUSHIKI CO., LTD., A/K/A/ SMC CORPORATION AND SMC PNEUMATICS, INC.,
RESPONDENTS.

On Petition for Writ of Certiorari to the United States Court of Appeals for the Federal Circuit

BRIEF FOR MINNESOTA MINING AND MANUFACTURING COMPANY ET AL. AS *AMICI CURIAE* IN SUPPORT OF PETITION FOR WRIT OF CERTIORARI

GARY L. GRISWOLD
Counsel of Record
MINNESOTA MINING AND MANUFACTURING COMPANY
P.O. Box 33427
St. Paul, Minnesota
55133-3427
(651) 733-8904

25 pp

QUESTIONS PRESENTED

The questions presented by the Petitioner are:

1) Whether every claim-narrowing amendment designed to comply with any provision of the Patent Act—including those provisions not related to prior art—automatically creates prosecution history estoppel regardless of the reason for the amendment; and

2) Whether the finding of prosecution history estoppel completely bars the application of the doctrine of equivalents.

AMICI CURIAE JOINING THIS BRIEF

Minnesota Mining and Manufacturing Company

Bose Corporation

The Dow Chemical Company

Henkel Corporation

Johnson & Johnson

Pfizer Incorporated

PPG Industries, Incorporated

Rexam Beverage Can Company

Sun Microsystems, Incorporated

Verizon Communications Incorporated

The parent corporations of the Henkel Corporation are Henkel of Americas and Henkel KGaA. The parent corporation of the Rexam Beverage Can Company is Rexam PLC. No other publicly held company owns 10% or more of the stock in these corporations.

The Minnesota Mining and Manufacturing Company, Bose Corporation, The Dow Chemical Company, Johnson & Johnson, Pfizer Incorporated, PPG Industries, Incorporated, Sun Microsystems, Incorporated, and Verizon Communications Incorporated have no parent corporations, and no publicly held company owns 10% or more of the stock in these corporations.

TABLE OF CONTENTS

Page

QUESTIONS PRESENTED i
AMICI CURIAE JOINING THIS BRIEF ii
TABLE OF AUTHORITIES iv
INTEREST OF THE *AMICI CURIAE* 1
SUMMARY OF ARGUMENT 3
ARGUMENT 5
I. *Warner-Jenkinson* Stands For A Balanced, Rather Than A Bright Line, Approach To The Doctrine Of Prosecution History Estoppel. 5
II. The Federal Circuit's New Inflexible Rule Is In Direct Conflict With *Warner-Jenkinson*. 10
III. *Festo* Unfairly Deprives Patent Owners Of Property Rights Already In Force. 13
IV. *Festo* Will Undermine The Future Effectiveness Of The Patent System To Incentivize And Protect Investments In Innovation. 15
CONCLUSION 18

TABLE OF AUTHORITIES

Cases **Page(s)**

Control Resources, Inc. v. Delta Electronics, Inc., 133 F. Supp.2d 121 (D. Mass. 2001) 10
Festo Corp. v. Shoketsu Kinzoku Kogyo Kabushiki Co., 234 F.3d 558 (Fed. Cir. 2000) (*en banc*) ..... *passim*
Hilton Davis Chemical Co. v. Warner-Jenkinson Co., 62 F.3d 1512 (Fed. Cir. 1995) (*en banc*), *rev'd and remanded*, 520 U.S. 17 (1996) 5
Hughes Aircraft Co. v. United States, 717 F.2d 1351 (Fed. Cir. 1983) 13
Hughes Aircraft Co. v. United States, 140 F.3d 1470 (Fed. Cir. 1998) 9
Litton Systems, Inc. v. Honeywell, Inc., 140 F.3d 1449 (Fed. Cir. 1998) 9
Litton Systems, Inc. v. Honeywell, Inc., 145 F.3d 1472 (Fed. Cir. 1998) 16
Sextant Avionique, S.A. v. Analog Devices, Inc., 172 F.3d 817 (Fed. Cir. 1999) 9
Warner-Jenkinson Co. v. Hilton Davis Chemical Co., 520 U.S. 17 (1997) ..... *passim*
Winans v. Denmead, 56 U.S. 330, 15 How. 330, 14 L. Ed. 717 (1854) 1

Statutes

35 U.S.C. § 112 ..... 7, 8, 11, 17
35 U.S.C. § 154 17
U.S. CONST., art. I, § 8, cl. 8 14

Miscellaneous

Brief for the United States as *Amicus Curiae*, 1996 WL 172221, *Warner-Jenkinson Co. v. Hilton Davis Chemical Co.*, 520 U.S. 17 (1997) (No. 95-728) 7, 8
IPO Daily News, May 2, 2001, *at* http://www.ipo.org 16
Petition for Writ of Certiorari 15
Tr. of 1999 Interference Roundtable (Oct. 20, 1999), *at* http://www2.uspto.gov/web/offices/dcom/bpai/transcripts.html 16
Victoria Slind-Flor, *Dying Doctrine of Equivalents*, THE NATIONAL LAW JOURNAL, Dec. 18, 2000 16

INTEREST OF THE *AMICI CURIAE*

The *Amici Curiae* are American corporations of various sizes, involved in a variety of different businesses.[1] Some of them obtain relatively large numbers of United States patents every year (*e.g.*, 3M obtained 483 U.S. patents in 2000; Sun Microsystems obtained 465); some of them obtain far fewer. But what brings them together as *Amici Curiae* is their shared belief in the importance of investments in research and development, and their desire for a patent system that justifies those investments by providing effective protection for their innovations against copying and infringement. In many respects, therefore, the *Amici Curiae* represent a cross section of typical users of the United States patent system.

In seeking U.S. patents to protect the fruits of their investment in research and development, the *Amici Curiae* have come to rely on the scope that their patent rights have enjoyed under the case law of this Court and the United States Court of Appeals for the Federal Circuit. The doctrine of equivalents has been an integral part of the rights that typical patent owners have relied upon under the patent laws since this Court's decision in 1854 in *Winans v. Denmead*, 56 U.S. 330, 15 How. 330, 14 L. Ed. 717. The doctrine of equivalents has afforded patent owners with effective protection from infringers who

---

[1] The parties have consented to the filing of this brief, and letters of consent are being filed herewith. In accordance with Supreme Court Rule 37.6, the *Amici Curiae* represent that no counsel for a party authored this brief in whole or in part and no person or entity, other than the *Amici Curiae*, their members, or their counsel made a monetary contribution to the preparation or submission of this brief.

make merely insubstantial differences from the literal language of patent claims. Such protection has been absolutely crucial to companies who seek to protect their core technology through patent rights, but who cannot predict, much less patent, each and every insubstantial difference or nuance a copyist might make to avoid the literal claim language.

The *Amici Curiae* believe that the decision of the United States Court of Appeals for the Federal Circuit in *Festo Corp. v. Shoketsu Kinzoku Kogyo Kabushiki Co.*, 234 F.3d 558 (Fed. Cir. 2000) (*en banc*), is inconsistent with the well-settled body of precedent they have come to rely upon, including from this Court in its decision in *Warner-Jenkinson Co. v. Hilton Davis Chemical Co.*, 520 U.S. 17 (1997).

Moreover, by ruling now that prosecution history estoppel automatically applies to bar ***any*** range of equivalents to ***any*** claim element that was in any sense narrowed by amendment during prosecution for virtually ***any*** reason,[2] the Federal Circuit has unfairly changed the rules with respect to vast numbers of patents already in force, and to be granted in the future, in a manner that the *Amici Curiae* believe seriously undermines the patent

[2] As discussed in Section I, *infra*, the Federal Circuit, in holding in *Festo* that any "narrowing" amendment made for a substantial reason related to "patentability" triggers prosecution history estoppel, defines "patentability" far more broadly than this Court did in *Warner-Jenkinson*, leaving little possibility of an amendment that would not automatically bar the doctrine of equivalents.

system and its ability to encourage investments in innovation.[3]

SUMMARY OF THE ARGUMENT

When this Court decided in *Warner-Jenkinson* that the doctrine of equivalents should remain a vital component of patent law, its opinion assured that inventors would be afforded reasonable and appropriate protection against infringers. This Court recognized that inventions should be protected from those seeking to free ride on inventive efforts by practicing mere *insubstantial differences* from the claimed invention. In essence, this Court quite appropriately recognized that a fundamental property right—innovations just outside the literal scope of a patent claim, but nonetheless equivalent to the claimed invention—should belong to the innovator, rather than to the copyist.

The Federal Circuit's *en banc* decision in *Festo* has eviscerated that property right. The Federal Circuit has grafted onto the doctrine of equivalents a wide-ranging and indiscriminate prosecution history estoppel that works to restrict patent claims to their literal scope in virtually all but those rare situations in which a "virgin" claim—never tarnished by a narrowing amendment during the give-and-take of prosecution before a patent examiner—remains in the issued patent. In effect, the Federal Circuit's *Festo* decision all but eliminates the doctrine of

[3] The importance of the Federal Circuit's decision and its impact on patent law are further underscored by the fact that the Court of Appeals heard this case *en banc* and received many *amicus curiae* briefs, including ones from industry representatives Hewlett-Packard, Procter & Gamble, IBM, Ford, and Kodak.

equivalents as a means of protecting the fruits of innovation.

The reach of prosecution history estoppel that the Federal Circuit adopts in *Festo* is contrary to the settled expectations arising from over a century of this Court's precedent, culminating in *Warner-Jenkinson*, *see* Judge Michel's partial dissent in *Festo*, *id.* at 601-09, and eighteen years of Federal Circuit precedent. *See id.* at 612-15. The Federal Circuit's decision in substance negates this Court's holding in *Warner-Jenkinson*.

The *Amici Curiae* believe that the Federal Circuit, in an effort to set out "bright line" rules, elevates certainty over fairness. The *Amici Curiae* believe that this "solution" is worse than the perceived "problem." The decision in *Festo* violates fundamental fairness, by wiping out long-standing precedent on which the owners of over one million U.S. patents now in force relied in prosecuting their applications, in effect constituting a retroactive legislative elimination of basic property rights in those patents. The decision is also likely to saddle the prosecution of patent applications with increased contentiousness, cost, and delay, thus undermining the future effectiveness of the patent system as an incentive for investments in new technology.

This Court's mandate in *Warner-Jenkinson* made clear that the doctrine of equivalents is a fundamental part of the patent grant: "Today we adhere to the doctrine of equivalents." 520 U.S. at 41. The Federal Circuit's *Festo* decision narrows the doctrine of equivalents to the point where it no longer serves as an effective, enforceable means to protect the property rights inherent in the patent grant. Thus, grant of *certiorari* is needed to reverse the Federal Circuit's holding and restore the reach of

the doctrine of equivalents as mandated in *Warner-Jenkinson*.

ARGUMENT

I. *Warner-Jenkinson* Stands For A Balanced, Rather Than A Bright Line, Approach To The Doctrine Of Prosecution History Estoppel.

The doctrine of equivalents is a judicial doctrine at its heart calculated to produce fundamental fairness. This fairness cannot exist absent a balanced, case-by-case judgment of where the equities lie—in the public's right to certainty in a patent's scope of exclusivity, or in the innovator's right to protection that is not tightly bounded by a linguistic literalism that allows mere colorable differences to escape the reach of a patent. Although the public may benefit in some respects from the increased certainty that may result from strict "bright line" literalism in construing the scope of patent rights, such benefits come at the cost of the patentee's rights, since such a framework disproportionately burdens the patentee. Thus, the doctrine of equivalents "tempers the rigor of literalness" and strengthens the patent system by evaluating the proper scope of patent protection on a case-by-case basis, rather than using an arbitrary rule. *Hilton Davis Chemical Co. v. Warner-Jenkinson Co.*, 62 F.3d 1512, 1531 (Fed. Cir. 1995) (*en banc*) (Newman, J., concurring), *rev'd and remanded*, 520 U.S. 17 (1997).

This Court in *Warner-Jenkinson* confirmed the vitality of the doctrine of equivalents. It then proceeded to recognize the unfairness and

disincentives created by an inflexible approach to when prosecution history estoppel arises to bar application of the doctrine of equivalents, and how the scope of an estoppel, once it arises, should be gauged.

Specifically, with respect to when an estoppel arises, this Court rejected the petitioner's proposed inflexible rule that any narrowing amendment would create an estoppel. Instead, the Court distinguished between two categories of amendments. One category consists of amendments "related to patentability," 520 U.S. at 33, which the Court noted were usually made to distinguish prior art or avoid obviousness. *See* 520 U.S. at 30-31. The second category consisted of amendments made for the "*variety* of other reasons why the PTO [Patent and Trademark Office] m[ight] request a change in claim language." 520 U.S. at 31 (emphasis added). Only amendments in the first category would necessarily give rise to an estoppel. Amendments in the second category, even though made in response to the "Patent Office's insistence upon a change in the claims," *id.*, and thus imposed as a condition of the patent grant, would "not necessarily preclude infringement by equivalents of that element." *Id.* at 33. In presenting its reasons for distinguishing between these two categories of amendments, this Court gave weight to well-settled Patent Office practices:

> And if the PTO has been requesting changes in claim language without the intent to limit equivalents or, indeed, with the expectation that language it required would in many cases allow for a range of equivalents, we should be extremely reluctant to upset the basic assumptions of the PTO without substantial reason for doing so. Our prior cases have consistently applied prosecution history estoppel only where claims have been amended for a *limited* set of reasons, and we see no substantial cause for requiring a more rigid rule invoking an estoppel regardless of the reasons for a change.

Id. at 32 (emphasis added).

For examples of amendments in the second category, the Court cited pages 22-23 of the Brief for United States as *Amicus Curiae*, which in turn described amendments relating to the requirements of 35 U.S.C. § 112: enablement, specificity, definiteness, and the like.[4] *See* 520 U.S. at 31-32. *Festo*, in contrast, sweeps *all* "narrowing" amendments into the first category, leaving little, if any, room for amendments that do not automatically trigger an absolute estoppel. In doing so, the *en banc* majority in *Festo* does not discuss this Court's treatment of amendments to overcome non-prior art rejections, including the above-quoted discussion by this Court of "the basic assumptions of the PTO" or this Court's reference to the section 112 rejections

---

[4] The Brief for the United States as *Amicus Curiae* stated that amendments "to reflect the scope of what was enabled or to add specificity," in addition to "claim changes or arguments made in order to more particularly point out the applicant's invention," should "not necessarily estop" the patentee from obtaining protection under the doctrine of equivalents. Brief for the United States as *Amicus Curiae* at 22-23, 1996 WL 172221, *Warner-Jenkinson Co. v. Hilton Davis Chemical Co.*, 520 U.S. 17 (1997) (No. 95-728) (internal quotation marks and citation omitted). Such amendments relate to compliance with 35 U.S.C. § 112, which notably does ***not*** appear under Chapter 10 of Title 35 entitled "Patentability of Inventions."

discussed in the Brief for the United States as *Amicus Curiae*. *Id.* at 32. Rather, the Court of Appeals simply states "we do not believe that the Supreme Court itself answered this question in *Warner-Jenkinson*." *Festo*, 234 F.3d at 567. To the contrary, the *Amici Curiae* submit that *Warner-Jenkinson* does in fact stand for the proposition that section 112-related amendments, even though required by the PTO to secure issuance of a patent, are not in the category of amendments "related to patentability" that necessarily create an estoppel. *Warner-Jenkinson*, 520 U.S. at 33.

Likewise, *Warner-Jenkinson* confirmed the same "look at the reason for the amendment" approach in describing how the scope of an estoppel, once created, should be determined. Because the "scope of estoppel" question was not squarely raised in *Warner-Jenkinson*, this Court devoted less discussion to it than to the question of when an estoppel arises. Nevertheless, in footnote 7 the Court signaled that there would be no absolute bar to equivalents even when the amendment distinguished prior art and thus created an estoppel:

> We do not suggest that, where a change is made to overcome an objection based on the prior art, a court is free to review the correctness of that objection when deciding whether to apply prosecution history estoppel. As petitioner rightly notes, such concerns are properly addressed on direct appeal from the denial of a patent, and will not be revisited in an infringement action. *Smith v. Magic City Kennel Club, Inc.*, 282 U.S. at 789-790. What *is* permissible for a court to explore is the reason (right or wrong) for the objection *and the manner in which the amendment addressed and avoided the objection.*

Id. at 33 n.7 (second emphasis added).

Thus, even with respect to amendments made to distinguish the prior art, this Court did not hold or suggest that no range of equivalents is permissible. To the contrary, a fair reading of *Warner-Jenkinson* is that, even with respect to amendments made to overcome prior art rejections, the scope of the resulting estoppel should be determined based on the real substance of what had actually happened during prosecution—the nature of the prior art objection and the rationale for how the amendment distinguished the art. Indeed, this straightforward reading of *Warner-Jenkinson* is confirmed by the Federal Circuit's own decisions issued prior to *Festo*. *See, e.g., Litton Systems, Inc. v. Honeywell, Inc.*, 140 F.3d 1449, 1455 (Fed. Cir. 1998); *Hughes Aircraft Co. v. United States*, 140 F.3d 1470, 1476 (Fed. Cir. 1998); *Sextant Avionique, S.A. v. Analog Devices, Inc.*, 172 F.3d 817, 830-32 (Fed. Cir. 1999). In *Festo*, however, the *en banc* majority now rejects this uniform interpretation of *Warner-Jenkinson* set forth by several Federal Circuit panels. 234 F.3d at 569.

It also should be noted that this Court's opinion in *Warner-Jenkinson* reaffirmed several safeguards designed to protect against overbroad or unfounded application of the doctrine of equivalents. This Court: (1) limited the doctrine of equivalents to subject matter that represents only "insubstantial differences" from the literal claim language; (2) expressly recognized that the doctrine of equivalents may not be used to ignore express claim elements, but rather must be applied on an element-by-element basis (the so-called "All Elements Rule"); (3)

established a presumption that an unexplained claim amendment would give rise to prosecution history estoppel; and (4) encouraged district courts to enforce such safeguards by use of summary judgment. *See* 520 U.S. at 39, 39 n.8. These safeguards, and others that have long been recognized by the Federal Circuit, such as the limitations on the doctrine of equivalents imposed by the prior art, have provided ample opportunities for courts to enter judgments of non-infringement in cases where they are warranted. Indeed, since this Court's *Warner-Jenkinson* decision in 1997, there have been at least 48 reported decisions of the Federal Circuit involving district court grants of summary judgment of non-infringement under the doctrine of equivalents, and of those the Federal Circuit affirmed 31 (69%) of them. In short, the doctrine of equivalents is far from a legal doctrine run amok, justifying the bright line rule announced by the Federal Circuit in *Festo*.

II. The Federal Circuit's New Inflexible Rule Is In Direct Conflict With Warner-Jenkinson.

The Federal Circuit's *en banc* decision in *Festo* effectively reverses *Warner-Jenkinson*'s reaffirmation of the doctrine of equivalents. In fact, post-*Festo* district court decisions already have recognized that *Festo* leaves little room for application of the doctrine of equivalents, with virtually the only exception being those rare instances in which a patent claim sailed through prosecution without amendments. *See, e.g., Control Resources Inc. v. Delta Electronics, Inc.*, 133 F. Supp.2d 121, 134 (D. Mass. 2001) (observing that the

Festo decision "essentially stops the doctrine of equivalents in its tracks").

As explained above, the Federal Circuit's decision in *Festo* also specifically conflicts with two key aspects of this Court's decision in *Warner-Jenkinson* regarding prosecution history estoppel. First, whereas this Court made explicit that amendments made in response to section 112 rejections should be treated differently from those made to overcome prior art rejections, the Federal Circuit lumps all those amendments together. The result is that "the *variety* of other reasons why the PTO may request a change in claim language" held by this Court not necessarily to create an estoppel is now all but extinct. *Warner-Jenkinson*, 520 U.S. at 31 (emphasis added).

Second, in applying an absolute rule to the scope of an estoppel, the Federal Circuit upsets both the overall balanced approach of *Warner-Jenkinson* and the well-settled rule, reaffirmed in *Warner-Jenkinson*, that the underlying rationale for an amendment should be considered even when the amendment relates to prior art. *Id.* at 33 n. 7. A careful reading of the Federal Circuit's majority and concurring opinions in *Festo* suggests that the court's new bright line approach to the doctrine of prosecution history estoppel is designed to address the lack of complete certainty that is an inherent by-product of the doctrine of equivalents itself. As noted above, it is far from clear that such uncertainty is a pervasive problem, and there is nothing in the record of this case that demonstrates, or even suggests, that the Federal Circuit's bright line approach is necessary to remedy widespread instances of patentees resorting to the doctrine of equivalents to obtain an unfounded scope for their patent rights.

But in any event, the Federal Circuit's efforts to promote "certainty" conflict with this Court's reasoning in *Warner-Jenkinson*, which at its core held that a degree of uncertainty ***is*** an acceptable price to pay for the fairness that the doctrine of equivalents provides.

The Federal Circuit's majority opinion in *Festo* repeatedly invokes the "notice function" of patent claim language. Yet that notice function is no more undermined by a finding of equivalence to an amended claim than it is by a finding of equivalence to a claim that was never amended during prosecution. In each instance, the literal boundary of the claim is enlarged to prevent infringement by equivalent subject matter. In reality, the Federal Circuit limits the doctrine of equivalents far more than is actually necessary to balance the notice function of patent claims with the fundamental fairness of allowing patentees to assert their patent rights against infringers practicing mere equivalents of the literal claim scope. Under *Festo*, the pendulum swings so far in the direction of certainty that the beneficiaries are those seeking to free ride on claimed inventions, who now enjoy certainty that they are free to make an insubstantial change to a claim element amended during prosecution, and slavishly copy the remaining claim elements. In contrast, this Court struck the proper balance in *Warner-Jenkinson*, which held that the scope of prosecution history estoppel should be determined by an examination of the public record created by the patent applicant and the Patent Office during prosecution, thus providing the public with ample notice of what subject matter the patentee might have surrendered to obtain his claims.

The Federal Circuit in *Festo* rejects *Warner-Jenkinson*'s balanced approach to estoppel on the unsupported premise that it is "unworkable," a premise that is actually at odds with the widespread view of many in academia and industry (including the present *Amici Curiae*) that the patent system, including patent enforcement, has in fact been revitalized—in significant part because of the supportive role played by the Federal Circuit—and functions as an effective and efficient means of promoting and protecting innovation. Any decision to eviscerate the doctrine of equivalents is one that, if it is to be reached at all, should be reached by Congress.

III. Festo Unfairly Deprives Patent Owners Of Property Rights In Patents Already In Force.

The Federal Circuit's decision in *Festo* amounts in large part to retroactive legislation. As such, it results not only in unfairness, but also, in an important sense, a loss of due process. All of the patents now in force were prosecuted on the reasonable assumption that any narrowing amendments responding to rejections issued by the Patent Office would not automatically give rise to prosecution history estoppel barring ***all*** equivalents. This assumption, and its resulting effects on patent prosecution practice, was a product of reliance on long-standing Federal Circuit precedent, beginning with *Hughes Aircraft Co. v. United States*, 717 F.2d 1351 (Fed. Cir. 1983). The *Amici Curiae* and many others have relied upon this established rule of law in investing billions of dollars in research and development.

Thousands of patent license agreements are also in effect based on the same underlying understanding concerning the scope of equivalents afforded to patent rights. But now, in the absence of any legislative body conducting industrial policy analysis and providing a full opportunity for patent owners to present their views, the rules have been changed, both retroactively and prospectively.

In a very real sense, the issue is about the ownership of the intellectual property that lies just outside the literal claim language, and that is insubstantially different from it. Until *Festo*, this property right was owned by the inventor, or the inventor's assignee, because it was in substance part of his invention, unless application of the doctrine of equivalents would encroach on subject matter actually surrendered during prosecution or would ensnare prior art just outside the literal claim scope. Under *Festo*, however, the *Amici Curiae* and thousands of other patent owners have been stripped of this property right, since few existing patents have not had claims amended during the application process in the Patent Office. The property just outside the literal claim language will unfortunately always be free for the copyist, even when it is undisputedly equivalent to what is claimed, and thus flows directly from the patentee's contribution to the "Progress of Science and the Useful Arts." U.S. CONST., art. I, § 8, cl. 8.

IV. Festo Will Undermine The Future Effectiveness Of The Patent System To Incentivize And Protect Investments In Innovation.

Festo's impact on investment in innovation and on patent applications to be filed in the future is equally troublesome. Prior to *Festo*, the patent system encouraged investment in research that would lead to substantial improvements over previously patented technology. Developers recognized that insubstantially different products would likely be found to infringe others' patents. Post-*Festo*, insubstantial changes now can circumvent patent claims. All one needs to do to avoid a patent is to copy the patented invention but for a single insubstantial change in a feature described in an amended claim element. *See* 234 F.3d at 600-01 (Michel, J., concurring in part and dissenting in part). Motivation to achieve true innovation is diminished.

Moreover, in the post-*Festo* world, illogical results will confound patent drafters. The same claim limitation appearing in two claims may be accorded different effective scopes, if only one of the claims happened to be amended. Would-be patentees will be rewarded or punished based upon their ability to draft original claims that never require amendment.

In essence, the new rule requires patent applicants to do everything possible to avoid claim amendments during prosecution. As described in more detail by Petitioner (Petition for Writ of Certiorari at 25), the contentiousness, costs, and duration of patent prosecution are likely to increase dramatically if every narrowing claim amendment

results in an automatic and complete bar to the doctrine of equivalents.

The *Amici Curiae* regrettably recognize that the old give-and-take system between patent applicants and the Patent Office will be a thing of the past if *Festo* remains the law.[5] Rather than risking an equivalents-defeating estoppel, patent applicants will draw lines in the sand in their dealings with patent examiners, and, if they are unsuccessful in obtaining claims without amendments from the examiners, they will be forced to pursue appeals to the Patent Office's Board of Patent Appeals and Interferences. This will create a "new level of burden" for an already overburdened and underfunded Patent Office. Professor Janice M. Mueller, *quoted in* Victoria Slind-Flor, *Dying Doctrine of Equivalents*, THE NATIONAL LAW JOURNAL, Dec. 18, 2000 at B8. Today, the average pendency period for patent applications is 25 months, and the Patent Office has predicted that this period will expand to 38.6 months by 2006. *IPO Daily News*, May 2, 2001, *at* http://www.ipo.org. In addition, the backlog of the Board of Patent Appeals and Interferences is such that the average appeal lasts about two years.[6] An increase in Board appeals caused by the Federal Circuit's decision in *Festo* will,

---

[5] This "give-and-take" was aptly described by Judge Newman in her separate opinion in *Litton Systems, Inc. v. Honeywell, Inc.*, 145 F.3d 1472, 1478-80 (Fed. Cir. 1998) (Newman, J., offering separate views in denying petition for rehearing on remand).

[6] *See* Tr. of 1999 Interference Roundtable at 6 (October 20, 1999), *at* http://www2.uspto.gov/web/offices/dcom/bpai/transcripts.html (The Chief Administrative Patent Judge of the Board of Patent Appeals and Interferences reported an inventory of 8,344 appeals constituting "21.8 Board months of inventory.").

in all likelihood, simply overwhelm the Board's docket. Such delays will discourage investment in technology whose protection depends on the issuance of patent applications trapped in this administrative appellate limbo.

The impact of this sea change in patent prosecution practice cannot be overstated. Some patents will issue so long after development of the claimed technology that they will, for practical purposes, be obsolete. Since the delays will be caused by patent applicants' decisions to resist equivalents-defeating amendments, and therefore are not the fault of the Patent Office, applicants may lose portions of their full patent term, having spent long periods of their twenty-years-from-filing-date life engaged in contentious and protracted Patent Office proceedings. *See* 35 U.S.C. § 154. Ironically, the scope of many of these patents will be less certain under *Festo*. The reluctance to amend will result in fewer clarifying amendments responding to section 112 rejections, thus undercutting at least some of the certainty that motivated the Federal Circuit to impose the absolute rules of *Festo* in the first place. Finally, patent litigation may become more disruptive, as newly issued patents are asserted against established, but now suddenly infringing, uses of technology that arose during long periods of patent prosecution. Faced with increased patent prosecution costs, longer delays, and narrower patent protection to boot, companies will be tempted to maintain their inventions as trade secrets, rather than seeking patents. The result might be a loss of the public disclosure of technology that is such a valuable by-product of our patent system.

CONCLUSION

For the foregoing reasons *Amici Curiae* Minnesota Mining and Manufacturing Company; Bose Corporation; The Dow Chemical Company; Henkel Corporation; Johnson & Johnson; Pfizer Incorporated; PPG Industries, Incorporated; Sun Microsystems, Incorporated; Rexam Beverage Can Company; and Verizon Communications Incorporated respectfully request that the Petition for Writ of Certiorari be granted.

Respectfully submitted,

GARY L. GRISWOLD
Counsel of Record
MINNESOTA MINING AND MANUFACTURING CO.
P.O. Box 33427
St. Paul, MN 55133
(651) 733-8904

CHARLES HIEKEN
225 Franklin St.
Boston, MA 02110
Counsel for Bose Corp.

BRUCE M. KANUCH
GLENN H. KORFHAGE
THE DOW CHEMICAL CO.
2030 Dow Center
Midland, MI 48674

WAYNE C. JAESCHKE
HENKEL CORPORATION
2200 Renaissance Blvd.
Gulph Mills, PA 19406

PHILIP S. JOHNSON
JOHNSON & JOHNSON
One Johnson & Johnson Plaza
New Brunswick, NJ 08933

PETER C. RICHARDSON
LAWRENCE C. AKERS
PFIZER INCORPORATED
235 East 42nd Street
New York, NY 10017

JOHN K. WILLIAMSON
LINDA PINGITORE
PPG INDUSTRIES, INC.
One PPG Place
Pittsburgh, PA 15228

MARY J. SCHNURR
REXAM BEVERAGE CAN CO.
8770 W. Bryn Mawr Ave.
Chicago, IL 60631

SUN MICROSYSTEMS, INC.
901 San Antonio Rd.
Palo Alto, CA 94303

LEONARD C. SUCHYTA
VERIZON COMMUNICATIONS INCORPORATED
1095 Ave. of the Americas
New York, NY 10036

(13)

No. 00-1543

Supreme Court, U.S.
FILED

MAY 9 2001

CLERK

IN THE

Supreme Court of the United States

FESTO CORPORATION,

Petitioner,

v.

SHOKETSU KINZOKU KOGYO KABUSHIKI CO., LTD., A/K/A SMC CORPORATION AND SMC PNEUMATICS, INC.,

Respondents.

On Petition for Writ of Certiorari to the United States Court of Appeals for the Federal Circuit

BRIEF OF *AMICI CURIAE* MASSACHUSETTS INSTITUTE OF TECHNOLOGY; WISCONSIN ALUMNI RESEARCH FOUNDATION; STATE UNIVERSITY OF NEW YORK-STONY BROOK, AMERICAN COUNCIL ON EDUCATION; COLD SPRING HARBOR LABORATORY; UNIVERSITY OF TEXAS, MEDICAL BRANCH AT GALVESTON AND M.D. ANDERSON CANCER CENTER HOUSTON IN SUPPORT OF PETITION FOR WRIT OF CERTIORARI

JAMES PHILLIP CHANDLER
Counsel of Record
THE CHANDLER LAW FIRM CHARTERED
Suite 300
1815 Pennsylvania Avenue, N.W.
Washington, D.C. 20006
(202) 842-4800
Counsel for Amici Curiae

May 9, 2001

WILSON-EPES PRINTING CO., INC. – (202) 789-0096 – WASHINGTON, D. C. 20001

23 pp

TABLE OF CONTENTS

	Page
TABLE OF AUTHORITIES	ii
INTEREST OF THE *AMICI CURIAE*	1
SUMMARY OF ARGUMENT	3
ARGUMENT	5
I. IN FESTO V. SMC, THE COURT OF APPEALS FOR THE FEDERAL CIRCUIT EFFECTIVELY OVERRULES THE UNITED STATES SUPREME COURT'S WARNER-JENKINSON V. HILTON-DAVIS DECISION	5
II. FORFEITING THE RESULTS OF U.S. RESEARCH	9
III. THE DOCTRINE OF EQUIVALENTS IS VIRTUALLY ABOLISHED UNDER FESTO	15
IV. FESTO HAS SHAKEN THE FOUNDATION OF UNITED STATES PATENT LAW	17
CONCLUSION	19

TABLE OF AUTHORITIES

CASES — Page

Exhibit Supply Co. v. Ace Patents Corp., 315 U.S. 126 (1942) 6
Festo Corp. v. SMC Corporation, 234 F.3d. 558 (2000) ..... *passim*
Graver Tank & Mfg. Co. v. Linde Air Prods. Co., 339 U.S. 605 (1950) 4
Loctite Corp. v. Ultraseal Ltd, et al., 781 F.2d at 861 4
Machine Co. v. Murphy, 97 U.S. 120 (1877) 15
Royal Typewriter Co. v. Remington Rand, 168 F.2d 691 (2d Cr. 1948) 16
Warner-Jenkinson Co. v. Hilton Davis Chem. Co., 520 U.S. 17 (1997) ..... *passim*
Winans v. Denmead, 56 U.S. 330 (1853) 16

STATUTES AND CONSTITUTIONAL PROVISIONS

35 U.S.C. § 200 *et seq* 8, 10, 11, 15
U.S. CONST. amend. V. 8

OTHER AUTHORITIES

AUTM LICENSING SURVEY, FY 1999 11
Bailey Morris, *Hands-On Spells Danger*, INDEPENDENT, Feb. 28, 1993 9
Barbara Ettore, *Working with the Feds*, MGMT. REV., Feb. 1994 10
Brian Deagon, *Leader's Success*, INVESTOR'S BUS. DAILY, Mar, 17, 1993 10
Guy Webster, *New Satellite-TV to Air in Spring*, ARIZ. REPUBLIC, Dec. 26, 1993 9
Howard W. Bremer. *University Technology Transfer Evolution and Revolution*, (unpub.) (manuscript on file with author and Council on Governmental Relations) 18

TABLE OF AUTHORITIES—Continued

Page

NATIONAL SCIENCE BOARD, Arlington, VA. 11
NAT'L SCI. FOUND., NSF 92-307, RESEARCH AND DEVELOPMENT IN INDUSTRY: 1989, (1992) 9
NATIONAL SCIENCE FOUNDATION, 2000 (NSP-00-1) 11
SCIENCE AND ENGINEERING INDICATORS, 2000 11
Tim Studt, *$158 Billion and Holding for U.S. R&D in 1991*, RES. & DEV., Jan 1991 9
William Neikirk, *Wonders of Technology Could Boost Economy*, CHI. TRIB., Feb. 25, 1993 10

INTEREST OF THE *AMICI CURIAE*

The institutions listed below as *amici curiae* file this brief *Amicus Curiae* in support of the Petition for Writ of Certiorari to the United States Court of Appeals for the Federal Circuit.[1]

Amici consist of several major academic institutions, which own thousands of patents and which invest billions of dollars annually in research that produces an ever expanding crop of patents. This harvest of patents enriches the nation, the universities and improves the health and lives of the American people and the peoples of the world. They therefore have a vital interest in protecting their existing patent assets and investments in research that may lead to new patents.

Wisconsin Alumni Research Foundation

Founded in 1925, the Wisconsin Alumni Research Foundation is the intellectual property management organization for the University of Wisconsin-Madison, one of the major research universities in the United States.

Since Professor Steenbock first presented his vitamin-D breakthrough, which led to the virtual worldwide elimination of rickets by the 1940s, over 3,000 discoveries have been disclosed to WARF. Based on these disclosures, WARF has obtained over one thousand U.S. patents and over 1,500 foreign equivalents and has granted the University funds in excess of $600 million.

Professor DeLuca's discoveries, protected by WARF through hundreds of patents worldwide, have resulted in breakthrough therapies for cancer, osteoporosis, psoriasis, renal osteodystrophy, multiple sclerosis and other serious human afflictions.

---

[1] Written consent to the filing of this brief has been obtained from the petitioner and respondents and is being filed herewith. No counsel for a party authored this brief in whole or in part and no person or entity, other than the *Amici Curiae*, their members, or their counsel made a monetary contribution to the preparation or submission of this brief.

Massachusetts Institute of Technology

The Massachusetts Institute of Technology ("M.I.T.") is a private, non-profit university. It is an urban institution with a main campus located in Cambridge, Massachusetts and a research facility, Lincoln Laboratory, located in Lexington, Massachusetts.

American Council on Education

The American Council on Education ("ACE") represents all sectors of American higher education. Its approximately 1900 members include a substantial majority of colleges and universities in the United States. Since its founding in 1918, ACE has sought to promote high standards in higher education.

State University of New York-Stony Brook
Office of Technology Licensing and Industrial Relationships

The State University of New York—Stony Brook, Office of Technology Licensing and Industrial Relationships, is the locus for issues regarding Patents, Copyrights, Technology Transfer and intellectual property of all kinds.

Cold Spring Harbor Laboratory

The Cold Spring Harbor Laboratory is a research and educational institution located in Cold Spring Harbor, New York. The Laboratory has research programs focusing on cancer, neurobiology, plant genetics, genomics and bioinformatics, and a broad educational mission, including the recently established Watson School of Biological Sciences.

University of Texas Medical Branch
Technology Management Office

Established in 1891 as the University of Texas Medical Department, UTMB has grown from one building, 23 students and 13 faculty members to a modern health science

center with more than 70 major buildings, more than 2,800 students and more than 1,600 faculty.

University of Texas M.D. Anderson Cancer Center

One of the country's original three Comprehensive Cancer Centers, M.D. Anderson was ranked the best cancer hospital in the country in *U.S. News and World Report* magazine's annual "Best Hosptials" survey. Since 1990, M.D. Anderson has ranked among the nation's top two cancer hospitals.

M.D. Anderson pioneered the multidisciplinary approach to cancer care, assembling a team of experts to provide the optimal treatment for each patient. But perhaps the institution's greatest strength is the ability to take cutting-edge cancer research and translate it into new therapies for its patients.

In 1999, approximately 65,000 patients were served by the institution, and more than 409,000 outpatient clinic visits were recorded.

SUMMARY OF ARGUMENT

The United States Court of Appeals for the Federal Circuit (C.A.F.C.) has adopted a prosecution history estoppel doctrine (estoppel doctrine) that bars the use of the doctrine of equivalents if any change limiting the scope of a claim in a patent application is made during the prosecution process, irrespective of the reason for the change. This estoppel doctrine is a radical departure from existing law. Under the existing law, the doctrine is limited to cases in which the patent applicant is forced to amend, as otherwise the applicant would not have a patentable invention at all. Under the new C.A.F.C. created estoppel doctrine, all amendments that result in a narrowing of any element of any claim is completely barred from use of the doctrine of equivalents to protect their invention. This rule is given retrospective application, applying to all existing patent holders and applicants.

There are 1.2 million patents being held today. Many of these patents are being held by the *Amici Curiae* before the Court today. They also have thousands of patents pending in the United States Patent and Trademark Office. We argue that the change in the estoppel doctrine puts thousands of their patents at risk of loss. These patents are vested property rights. Further, it is bad public policy as it disables them from continuing to make the large contribution which they have made in pushing back the frontiers of science, producing cures for human diseases and otherwise improving the lives of the people in the United States and around the world. As holder of patents which are in wide circulation with vested rights arising out of the equivalencies that were left open to them by the PTO practice, the Federal Circuit's decision would result in the divestment of these vested patent rights. This point is further highlighted by Judge Linn's opinion in which Judge Rader joined:

> Because claims are commonly amended during prosecution, prosecution history estoppel touches almost every doctrine of equivalents infringement analysis. *See Loctite*, 781 F.2d at 871, 228 U.S.P.Q. at 96. Although a complete bar would provide bright line enhancement of the notice function of claims, it unfairly subjects almost every patentee to the mercy of verbalism at an early stage of development. *See Graver Tank*, 339 U.S. at 607. Rather than promote technological growth, the majority's new rigid rule will effect a serious invasion of the patentee's security of receiving the full benefit of his invention and is likely to be a disincentive to early disclosure of new inventions and discoveries. I see no substantial cause for the majority's drastic action, and I must, respectfully, dissent from the pronouncement that any time a claim limitation is narrowed by amendment for any statutory purpose, regardless of the nature and

> extent of the change, prosecution history estoppel completely bars the application of the doctrine of equivalents.

See Festo v. SMC, 2000 U.S. App. LEXIS 29979 (Fed Cir. Nov. 29, 2000) (Linn, J., dissenting).

The C.A.F.C., seems to directly challenge the unanimous decision of the United States Supreme Court in *Warner-Jenkinson Co. v. Hilton Davis Chemical Co.*, 520 U.S. 17 (1997), and has shaken the very foundation of the American patent system. The public, the bar, and investors have a right to rely upon the authority articulated by a unanimous decision of the United States Supreme Court. They should be able to rely on the Court in shaping their affairs, choosing their investment policy and in making license agreements with assignees and users of the various patent rights which they have created.

It is therefore with a sense of the highest urgency that *Amici Curiae* herein respectfully request this Honorable Court to issue its *Writ of Certioriari to the United States Court of Appeals for the Federal Circuit.*

ARGUMENT

I. IN *FESTO V. SMC*, THE COURT OF APPEALS FOR THE FEDERAL CIRCUIT EFFECTIVELY OVERRULES THE UNITED STATES SUPREME COURT'S *WARNER-JENKINSON V. HILTON-DAVIS* DECISION

The principal issue before the Court, and the basis of the petition for a *writ of certiorari*, is whether or not the prosecution history estoppel doctrine should be held within its traditional limits, namely where there is a question of patentability, or whether the doctrine of prosecution history estoppel should be expanded to cover every claim amendment made during the prosecution history of an application as proposed by the United States Court of Appeals for the

Federal Circuit in *Festo*. *Festo Corp. v. Shoketsu Kinzoku Kogyo Kabushiki Co., Ltd., a/k/a SMC Corporation, and SMC Pneumatics, Inc.*, 234 F.3d. 558 (2000). Further, embedded in these issues is whether the doctrine of equivalents is a viable doctrine after the *Festo* ruling.

In *Warner-Jenkinson*, the United States Supreme Court ruled that while "prosecution history estoppel [is] a legal limitation on the doctrine of equivalents", it is incorrect to conclude "that the *reason* (emphasis added) for an amendment during patent prosecution is irrelevant" to the subsequent application of the prosecution history estoppel doctrine. *Warner-Jenkinson Co. v. Hilton Davis Chemical Co.*, 520 U.S. 17; 1997 U.S. LEXIS 1476, at *11 (U.S. Mar. 3, 1997). The Court further observed that

> . . . prosecution history estoppel was tied to amendments made to avoid the prior art or otherwise to address a specific concern such as obviousness that arguably would have rendered the claimed subject matter unpatentable. Thus, in *Exhibit Supply Co. v. Ace Patents Corp.*, 315 U.S. 126 (1942), Chief Justice Stone distinguished inclusion of a limiting phrase in an original patent claim from the "very different" situation in which "the applicant, in order to meet objections in the Patent Office, *based on references to the prior art*, adopted the [limiting] phrase as a substitute for the broader one" previously used.

Warner-Jenkinson, 1997 U.S. LEXIS 1476, at *11 *quoting* 315 U.S. 126, 136, 62 S. Ct. 513, 86 L.Ed. 736 (1942) (emphasis added [by the Court]).

The *Warner-Jenkinson* Court further observed that in each case where it probed the reasoning behind the Patent Office's demand for a change in the written description of a claim, it was because the applicant was "not describing a patentable invention at all." *Warner-Jenkinson*, 1997 U.S. LEXIS 1476, at *12.

But on the other hand, the United States Justice Department, arguing on behalf of the U.S. Patent and Trademark Office (PTO), advised that where

> . . . [t]he PTO has been requesting changes in claim language without the intent to limit equivalents or, indeed, with the expectation that language it required would in many cases allow for a range of equivalents, we should be extremely reluctant to upset the basic assumptions of the PTO without substantial reason for doing so. Our prior cases have consistently applied prosecution history estoppel only where claims have been amended for a limited set of reasons, and we see no substantial cause for requiring a more rigid rule invoking an estoppel regardless of the reasons for a change.

Id. The Court further noted:

> [T]hat petitioner's rule might provide a brighter line determining whether a patentee is estopped under certain circumstances is not a sufficient reason for adopting such a rule. This is especially true where, as here, the PTO may have relied upon a fexible rule of estoppel when deciding whether to ask for a change in the first place. To change so substantially the rules of the game now could very well subvert the various balances the PTO sought to strike when issuing the numerous patents which have not yet expired and which would be affected by our decision.

Warner-Jenkinson, 1997 U.S. LEXIS 1476, at *12, n.6. The C.A.F.C. decided to overrule the United States Supreme Court's guidance that their "prior cases have consistently applied prosecution history estoppel *only* where claims have been amended for a *limited set of reasons* . . ." (Emphasis added) *Id.* at *12. The undaunted *Festo* Court rules that "a narrowing amendment made for *any reason* related to the statutory requirements for a patent will give rise to

prosecution history estoppel with respect to the amended claim element." *Festo v. SMC*, 2000 U.S. App. LEXIS 29979 at *11. The C.A.F.C. has thereby greatly expanded the domain in which the prosecution history estoppel doctrine may roam. And wherever it roams, "there is no range of equivalents available for the amended claim element. Application of the doctrine of equivalents to the claim element is completely barred (a 'complete bar')". *Id.* at *13.

This greatly expanded reach of the prosecution history estoppel doctrine was additionally specifically declined by the U.S. Supreme Court in *Warner-Jenkinson* on the ground that the PTO may have relied upon a flexible rule of estoppel when deciding to ask for a change in the first place. "To change so substantially the rules of the game now could very well subvert the various balances the PTO sought to strike when issuing the numerous patents which have not yet expired and which would be affected by our decision." *Warner-Jenkinson,* 1997 U.S. LEXIS 1476, at *12. In spite of this warning, the C.A.F.C. has subjected all existing patents retroactively to its roaming doctrine of prosecution history estoppel. It has ordered that all existing patents are now subject to substantial limitations if any claim was narrowed for any reason during prosecution. These existing patentees, under the C.A.F.C. in *Festo,* are completely barred from use of the doctrine of equivalents.

In making this rule, the Federal Circuit has placed in jeopardy 1.2 million existing patents, many of which are held by the *Amici Curiae* herein. The rule of *Festo* thereby divests long vested rights of existing patent holders in violation of the Fifth Amendment of the United States Constitution. *See* U.S. CONST. amend. V.

The United States Government, under 35 U.S.C. § 200 *et seq.*, which funds over 59% of the annual basic research budget of the national research universities of the United States, and nearly 100% of the budgets of the national

laboratories of the United States, such as MIT's Lincoln Laboratory, has a financial exposure in excess of one trillion dollars.

It is therefore a matter of the highest priority and of the greatest urgency that the United States Supreme Court grant a *writ of certiorari* requested by the petitioner herein. At risk is the untold value of all existing United States patents.

II. FORFEITING THE RESULTS OF U.S. RESEARCH

The United States is currently a primary source of new technology in the world, spending ten times more on basic research than the other G-8 nations combined, and envisions itself as remaining as such in the future. *See* Bailey Morris, *Hands-On Spells Danger*, INDEPENDENT, Feb. 28,1993, available in LEXIS, News Library, CURNWS File; Guy Webster, *New Satellite-TV to Air in Spring*, ARIZ. REPUBLIC, Dec. 26, 1993, available in LEXIS, News Library, CURNWS file (quoting technology forecaster and author Daniel Burrus). Both the public and private sectors in the United States invest large amounts of capital ($158 billion in 1991 and an estimated $249 billion in 2000) each year in research and development (R&D) of new technology. *See* Tim Studt, *$158 Billion and Holding for U.S. R&D in 1991*, RES. & DEV., Jan 1991, at 38, 38 (assessing overall U.S. R&D expenditures for 1991 at $158 billion.) Currently, however, the return on U.S. technology introduced into the global market is not sufficient to cover the overwhelming cost of its production. *See id.* at 38, 42. While the necessary foundations for the utilization of new technology already exists in the United States, this country must restructure its efforts to ensure that it is able to use new technology to successfully accumulate wealth and excel in the global marketplace.

For every dollar spent on basic research in the United States, *See* NAT'L SCI. FOUND., NSF 92-307, RESEARCH AND

DEVELOPMENT IN INDUSTRY: 1989, at 33 (1992) (defining basic research as "original investigations for the advancement of scientific knowledge not having specific immediate commercial objectives, although such investigations may be in fields of present or potential interest to the reporting company"), *ten dollars* (emphasis added) is needed to reach advanced development, *See id.* (defining development as "technical activities of a nonroutine nature concerned with translating research findings or other scientific knowledge into products or processes"), and an additional *one-hundred dollars* (emphasis added) is necessary to reach a manufacturing stage. Brian Deagon, *Leader's Success*, INVESTOR'S BUS. DAILY, Mar, 17, 1993, available in LEXIS, News Library, CURNWS File. Of the approximately $249 billion spent each year on R&D, much is allocated for basic research. *See* William Neikirk, *Wonders of Technology Could Boost Economy*, CHI. TRIB., Feb. 25, 1993, at 1, 12, 13. The 1992 federal R&D budget, totaling $100 billion, is divided between military and civilian projects. *Id.* at 12.

Federal expenditures on basic R&D are often in the form of grants to companies who have formulated a proposal as to the type of new technology they seek to create. *See generally* Barbara Ettore, *Working with the Feds*, MGMT. REV., Feb. 1994, at 46, 47 (providing an outline of federal R&D grant programs.) Each grant recipient produces its own research data in conjunction with the government in the hope of achieving the desired technological goal. *See id.* Extreme modification of patent rules upon which the Congress has relied, *See* 35 U.S.C. § 200 *et seq.*, may produce numerous unintended consequences upon the funding system and may result in practical problems that could hinder the effectiveness of the government funding programs.

The confinement of the right to exclude strictly to the letter of the claims of a patent, coupled with the broad application of prosecution history estoppel, is anathema to protecting the results of basic research.

In 1998, an estimate of $26.3 billion dollars was spent for research and development (R&D) at U.S. academic institutions *See* SCIENCE AND ENGINEERING INDICATORS, 2000; NATIONAL SCIENCE BOARD, Arlington, VA; NATIONAL SCIENCE FOUNDATION, 2000 (NSP-00-1). Of this total amount, $15.6 billion was provided by the Federal Government, $5.0 billion by academic institutions, $2.1 billion by state and local governments, $1.9 billion by industry, and $1.8 billion was derived from other sources (foundations, non-profits, gifts, etc.) The Federal Government thus supplied about 59% of the total R&D funding in academia.

Academic activities have been and continue to be heavily concentrated in basic research. In 1998, 69% of the total R&D expenditures went for basic research, 24% for applied research, and 7% for development.

Since the passage of the Bayh-Dole Act in 1980 (35 U.S.C. § 200 *et seq.*), the university sector has become increasingly active in the transfer of technology, resulting from R&D activities. Technology is transfered from the university to the public through the private sector. United States patents and foreign patents are the vehicles by which this technology transfer is made. Today, the academic sector is responsible for about 3% of all U.S. origin patents. The nature of these patents, arising as they do primarily from basic research, tend to be unique. Many of them represent the basis for totally new products or even new industries (i.e. witness the biotechnology industry which found its origin in university-based research.)

Because of the often basic nature of inventions and discoveries patented, and in light of the ongoing research programs which may later serve to more clearly demark such inventions and discoveries, it is extremely difficult to precisely define the metes and bounds of a given invention at the outset, or all of the alternatives available, the practice of

which may achieve the same result in substantially the same way. To deprive such patented inventions and discoveries of the flexible interpretation accorded by the doctrine of equivalents, or to limit them to the literal language of amended claims would open the door to copyists, in particular foreign companies and countries, to appropriate the fundamental concept of those discoveries and inventions.

The university sector has thousands of patents in its cumulative portfolio, many of which have been licensed to the private sector for further development to the point of commercial application. The companies to whom licenses have been issued have been or are engaged in costly development efforts with the expectation that their efforts will be protected from competition under the licensing arrangements. This will permit them to, at minimum, recoup the investment that has been made in the development phase. Moreover, there is an expectation by the university sector that revenue in the form of fees and payments will accrue to it to defray the costs of patenting, the costs of the technology transfer function, and return additional funds to the coffers to support additional research.

It is quite conceivable and, in fact, likely, that the decision by the C.A.F.C. in *Festo*, may well send competitors to our licensees, particularly where the license is exclusive, to review in detail the prosecution history of the patents and/or patent applications under which the license has been granted to detect any amendment that may be construed as a trigger to invoke prosecution history estoppel. This is one of the nefarious effects of this decision discarding the "flexible rule" approach. It intends to foster and reward copying rather than inventions. Obviously, the unavailability of the doctrine of equivalents applied to any such amendments, as expressed in the claims, would also be carefully reviewed. The penultimate effect could be that licensees would terminate their license agreements to rely upon trivial changes to

distinguish over the licensed patents. Competitors too would seek to distinguish in the same manner. In fact, the hallmark of the American system over the Japanese system has been that patent is only a reward for true inventive step, rather than for a mere, minor or slight change from the status *quo*.

If a licensee perceived that a competitor, through insubstantial or trivial amendments to a product or process, could avoid infringement, there would remain little incentive for the licensee to continue its development program. There would no longer be a risk to benefit ratio that would induce the licensee to continue to finance development and market development with the knowledge that a competitor could avail itself of the inventive concept without the product or market development expenditure. Thus, the C.A.F.C. decision in *Festo* would have, at least, a chilling effect on the potential for licensing inventions by the university sector to the extraordinary detriment of the public. By parity of reasoning, the C.A.F.C. decision could also have a chilling effect upon the willingness of particularly the academic institutions, but also of the government and other research sponsors, to fund further research knowing that the patent coverage obtainable could be so narrowly focused as not to support a competitive advantage.

The scope of this concern is not trivial. In 1999, there were 417 new products introduced which were based upon university research. In addition, 344 new companies (spin-outs) were formed, and $862 million in licensing income and fees were generated from about 8,300 licenses. Moreover, the university sector had 18,617 licenses and options extant and active in that year with reported product sales from 25% of those active agreements. The university sector also received over 12,000 new invention disclosures upon which patent applications and, ultimately licenses, could be based. *See* AUTM LICENSING SURVEY, FY 1999.

What is often overlooked is the cost and effort that a patentee or its licensee must expend to develop a market for a new or improved product or process in addition to developing the product or process itself. Inasmuch as most basic research-based inventions tend to be embryonic in nature, the commitment by a university licensee must be substantial to accomplish both development goals. Under the C.A.F.C. decision, a potential competitor of the university licensee would have the opportunity to wait for the licensee to develop both the product or process licensed and the market for it, make insubstantial or trivial changes schooled by an examination of the prosecution history of the patent licensed, and enter the then known market without the development expenses required of the licensee. That capability would discourage, rather than encourage, a true effort to "design around." It would simply not be necessary. It would, therefore, discourage the exercise of creative ingenuity intended to be fostered by the U.S. patent system. It would also offer tantamount to a free license to foreign companies and countries to avail themselves of new technological concepts and entry into the marketplace in direct competition with U.S. industry at home and competitiveness in the global economy.

This reasoning comports with that of Judge Newman in her dissent where she states:

> The assumption that placing new technology in the public domain is always the optimum path to industrial growth is not supported by experience. Empirical studies have added rigor to the common sense knowledge that reduced profit opportunity affects the supply of capital to launch a new technology, and often the creation of the technology itself.

See Festo v. SMC, 2000 U.S. App. LEXIS 29979 (Fed. Cir. Nov. 29, 2000) (Newman, J., dissenting).

In the passage of the Bayh-Dole Act, *See* 35 U.S.C. § 200 *et. seq*. Congress recognized that: 1.) Imagination and creativity are truly a national resource; 2.) The patent system is the vehicle that permits us to deliver that resource to the public; 3.) Placing the stewardship of the results of basic research in the hands of universities and small business is in the public interest; 4.) The existing federal patent policy was placing the nation in peril during a time when invention and innovation was becoming the preferred currency in foreign affairs.

The United States cannot afford the luxury of casting away its doctrine of equivalents on the mere hope of a gain from a copyist whose primary goal is to profit from someone else's work. For this cause, we again respectfully request this Honorable Court to grant its *writ of certiorari* in this case.

III. THE DOCTRINE OF EQUIVALENTS IS VIRTUALLY ABOLISHED UNDER *FESTO*

The doctrine of equivalents allows a patent holder to enforce its patent against the maker of a product or process that does not fall within the literal scope of the patent claims, if the accused device or process infringes a patent holder's patent under the doctrine of equivalents. The patentee may recover if the accused device substantially performs substantially the same function in substantially the same way to achieve substantially the same result as the patented device or process. *Machine Co. v. Murphy*, 97 U.S. 120, 125 (1877). However, if the patentee is barred from complaining about the infringement under the doctrine of equivalents due to prosecution history estoppel, the infringer reaps a great windfall.

The purpose of the doctrine of equivalents is to prevent this type of fraud by proscribing the making, using or selling of a device that is essentially the same as the patented invention, but which does not fall within the literal scope of the patented

claims. The doctrine balances the public need to rely on the literal scope of the claims with the inherent limitation of claim language; it provides an equitable means by which courts may determine ". . . the degree to which it is necessary to depart from the [literal] meaning [of the patent claims] to reach a just result." *Royal Typewriter Co. v. Remington Rand, Inc.*, 168 F.2d 691, 692; 77 U.S.P.Q. 517 (2d Cir. 1948).

The doctrine of equivalents has been a venerable doctrine in the patent law of the United States from *Winans v. Denmead*, 56 U.S. 330 (1853), to *Warner-Jenkinson v. Hilton Davis*, 520 U.S. 17 (1997).

In *Winans*, the Court stated the doctrine as follows:

> Where form and substance are inseparable, it is enough to look at the form only. Where they are separable; where the whole substance of the invention may be copied in a different form, it is the duty of the courts and juries to look through the form for the substance of the invention—for that which entitled the inventor to his patent, and which the patent was designed to secure; where that is found, there is an infringement; and it is not a defence, that it is embodied in a form not described, and in terms claimed by the patentee.

Winans v. Denmead, 56 U.S. 330, 343 (1853). In 1997, this Court in *Warner-Jenkinson v. Hilton-Davis*, held that the doctrine of equivalents continues as a viable doctrine in U.S. patent law. *See Warner-Jenkinson*, 1997 U.S. LEXIS 1476, at *4.

Equivalence is an equitable concept, having no definable boundary. The sole task of the courts should be to decide whether or not the accused device falls within this intangible area of equivalence as the courts are seeking the most equitable outcome based on the facts of each case. A generic rule such as that articulated by the C.A.F.C. in *Festo*, puts the doctrine of equivalents in an unusable strait jacket.

The C.A.F.C.'s rule in *Festo* has greatly reduced the availability of the doctrine of equivalents to existing patents and has opened the door to unchecked fraud in the marketplace.

IV. *FESTO* HAS SHAKEN THE FOUNDATIONS OF PATENT LAW

Numerous questions are raised and left unanswered by the C.A.F.C. *Festo* decision. The impact on prior cases which relied upon *Warner-Jenkinson*, but which are unlitigated, poses serious problems for the patent owners: Will *Festo* overrule *Warner-Jenkinson*? Upon what law should the litigant rely? Upon what law should applicants rely? Should the U.S. Patent Office revamp or revise its rules and regulations to conform to *Festo*? Should the Patent Office continue to rely upon the Supreme Court ruling in *Warner-Jenkinson*? Should applicants in prosecuting patent applications adapt to the C.A.F.C. rule on prosecution history estoppel? Should the applicant assume that every claim narrowing amendment, whether voluntary or involuntary, made to comply with any provision of the patent act (whether the extent of narrowing is required or not), automatically creates prosecution history estoppel regardless of the reason for the amendment? The C.A.F.C. in *Festo* answered this question in the affirmative. *See Festo*, 2000 U.S. App. LEXIS 29979, at *11.

However, the U.S. Supreme Court answers this question in the negative. The Court ruled in *Warner-Jenkinson* that "where the reason for the change was not related to avoiding the prior art, the change may introduce a new element, but it does not necessarily preclude infringement by equivalents of that element." *Warner-Jenkinson*, 1997 U.S. LEXIS 1476, at*13. There is an urgent need for clarification between these two competing holdings.

We urge this Court therefore to grant its *writ of certiorari* to settle these questions, for without this Court's guidance, the current state of the law could cause a waste of enormous resources.

The economics of acquiring, maintaining and defending a patent portfolio will greatly increase under the new C.A.F.C. rules on prosecution history estoppel and the doctrine of equivalents. It will now require all prudent inventors, including the *Amici* herein to: 1.) File patents of narrower scope; 2.) This will lead to more patent filings; 3.) Applicants will be less compromising with examiner proposed language; 4.) Perhaps more appeal proceedings from PTO prosecution rejections will ensue; 5.) Fewer applications will be filed by the university sector overall to protect basic research results due to lack of discretionary funds with which to pay the increased costs; 6.) Fewer applications will mean less opportunity for the public to benefit from the results of basic research (most of which is funded with taxpayer dollars); 7.) The Patent Office should discontinue its practice of issuing adjacent patents, which are so close to issued patents that they basically co-opt the core invention of the issued patent.

Festo fails to aid in protection of University research/inventions and innovation at a time when inventions are the preferred currency of foreign affairs. *See* H. Bremer. *University Technology Transfer Evolution and Revolution*, (manuscript on file with author and COUNCIL ON GOVERNMENTAL RELATIONS (COGR) for their 50th Anniversary).

Again, we urge this Honorable Court to grant the *writ of certiorari* to help answer these questions.

CONCLUSION

Given the diversity of opinions expressed among the judges on the C.A.F.C., the success or failure of a litigant before that tribunal is not predictable given the uncertain state of the law.

Rights of litigants and the outcome of cases should not vary dependent upon the views of a particular jurist, but rather upon clearly articulated principles of law as established by the United States Supreme Court or the United States Congress.

For all of the foregoing reasons, *Amici Curiae* respectfully request that this Honorable Court issue its *Writ of Certiorari to the United States Court of Appeals for the Federal Circuit.*

Respectfully submitted,

JAMES PHILLIP CHANDLER
Counsel of Record
THE CHANDLER LAW FIRM CHARTERED
Suite 300
1815 Pennsylvania Avenue, N.W.
Washington, D.C. 20006
(202) 842-4800

Counsel for Amici Curiae

May 9, 2001

(14)

Supreme Court, U.S.
FILED
MAY 9 2001
OFFICE OF THE CLERK

No. 00-1543

In the Supreme Court

OF THE

United States

FESTO CORPORATION,
Petitioner,

vs.

SHOKETSU KINZOKU KOGYO KABUSHIKI CO., LTD.,
a/k/a SMC CORPORATION AND
SMC PNEUMATICS, INC.
Respondents.

On Petition For Writ Of Certiorari To The United States Court Of Appeals For The Federal Circuit

BRIEF OF *AMICUS CURIAE* APPLERA CORPORATION (APPLIED BIOSYSTEMS AND CELERA GENOMICS) IN SUPPORT OF RESPONDENTS

MATTHEW D. POWERS
Counsel of Record
EDWARD R. REINES
JOSH A. KREVITT
WEIL, GOTSHAL & MANGES LLP
2882 Sand Hill Road, Suite 280
Menlo Park, CA 94025
(650) 926-6200

Counsel for Amicus Curiae Applera Corporation

Bowne of Los Angeles, Inc., Law Printers (213) 627-2200

12 pp

TABLE OF CONTENTS

		Page
I.	STATEMENT OF INTEREST	1
II.	INTRODUCTION	2
III.	THE PETITION SHOULD BE DENIED	4
	A. In *Festo,* The Federal Circuit Followed The Mandate Of This Court	4
	B. The Petition's Unsupported Doomsday Predictions Do Not Justify The Granting Of Certiorari	5
IV.	CONCLUSION	9

TABLE OF AUTHORITIES

Cases

	Page
Aclara Biosciences, Inc. v. Caliper Technologies Corp., 125 F. Supp.2d 391 (N.D. Cal. 2000)	7, 8
Brown v. Texas, 522 U.S. 940 (1997)	8
Festo Corp. v. Shoketsu Kinzoku Kogyo Kabushiki Co., Ltd. 234 F.3d 558	2, 3, 4, 5, 6, 7, 9
Lackey v. Texas, 514 U.S. 1045 (1995)	7, 8
McCray v. New York, 461 U.S. 961, (1983)	6, 8
Warner-Jenkinson Company, Inc. v. Hilton Davis Chemical Co., 520 U.S. 17, 39 n.8 (1997)	4

I.
STATEMENT OF INTEREST

Applera Corporation ("Applera") is a leading biotechnology company comprised of two businesses, Celera Genomics and Applied Biosystems.[1] Celera Genomics seeks to become the definitive source of genomic and related biological information and has already publicly announced that it has sequenced the human genome, among others. Applied Biosystems is the leading supplier of equipment and reagents for DNA sequencing worldwide, as well as many other areas of molecular analysis.

As a leader in the biotechnology field, Applera operates in a technologically dense environment. Not surprisingly, patent rights play an important role in its businesses. To be clear, Applera holds key patent rights and has been, and is, involved in litigation where it is the patent-holder. Likewise, as a successful company with substantial market share, Applera is the target of patent claims and has been, and is involved in litigation where it is the accused infringer. Applera merely seeks clear and certain rules that encourage and reward innovation by reinforcing the respect for legitimate patent rights, while also ensuring that the scope of the patent rights of others is clear to those wishing to enter or advance in a particular field.[2]

---

[1] Pursuant to Rule 37.6, none of the parties or their counsel has contributed substantively or monetarily to the preparation of this brief. Specifically, only the amicus has made a monetary contribution to the preparation or submission of this brief.

[2] Consent letters from the attorneys for Petitioner and Respondent are being filed concurrently with this brief.

II.

INTRODUCTION

In *Festo Corp. v. Shoketsu Kinzoku Kogyo Kabushiki Co., Ltd.* 234 F.3d 558 (Fed. Cir. 2000) the Federal Circuit, sitting *en banc,* determined, among other things that a prosecution history estoppel is an unambiguous bar to any attempt by a patentee to cover subject matter that falls outside the particular narrowing words selected by the patentee to gain allowance of patent rights.[3] Based on extensive experience, the Federal Circuit reasoned that the cost of the uncertainty imposed by a "flexible" rule allowing for indeterminate "degrees" of estoppel effect for subject matter beyond the limitation specifically chosen by the patentee, did not outweigh its benefits. *Id.* at 575 – 578.

Amicus Applera believes it is unwise for this Court to attempt to reevaluate the considered judgment of the Federal Circuit in its area of special expertise at this time, if it is inclined to address patent law issues at this level of detail at all. The central criticism of the Federal Circuit's exercise of judgment is that it supposedly constitutes "the virtual abolition of the century-old 'doctrine of equivalents,'" and that it "has dealt the patent system a crippling blow." Petition at 2, 24. At the same time, the Petition insists that the Federal Circuit's new rule is "new" and thus untested. Accordingly, the linchpin of the petition is that its sweeping predictions of future doom must be addressed by this Court now because there can be no meaningful "percolation" or "ventilat[ion]" of these issues by the lower courts which would allow the

[3] The petition does not clearly explain that the doctrine of equivalents can and usually *will* be available for a patent claim that has been amended. *See* Petition at 10-11 ("the majority barred all application of the doctrine of equivalents for amended claims"). The estoppel created by a patentee's decision to narrow its claim to obtain allowance is limited to only the precise language added to limit the claim and the doctrine of equivalents is available for every other aspect of the amended claim.

refinement of the law to minimize any undesired outcomes, and which would test the accuracy of its speculations.

Amicus Applera respectfully points out that this critical premise of the petition is not true. Speculative prognostications of doom and parades of horribles *can* and *should* be evaluated with experience. In addition, the lower courts around the country can — and already have — begun to evolve the law of *Festo* by, for example, limiting the estoppel to only the particular words within the claim specifically added by the patentee to narrow its claim to obtain a patent. Finally, the facts of this particular case do not shed light on the uncertainties of attempting to assign gradations of estoppel effect, and do not otherwise provide an appropriate context for this Court to judge the issue properly, if it were inclined to do so at all.

In sum, the immense weight of this Court's decisions, which can have unanticipated consequences in the intricate and well-developed body of Federal Circuit patent law, counsel against a decision by this Court in the tricky area of prosecution history estoppel until the issues have been ventilated and refined by the lower courts — if this Court believes it is appropriate at all to manage the patent law at this level of granularity. Unsupported speculations of doom and unproven parades of horribles provide a shaky and dangerous foundation for this Court to reassess the considered judgment of the Federal Circuit, which is involved in this notoriously complex area of patent law everyday.[4] For this reason alone, this petition should be denied.

[4] In a concurrence, Judge Lourie expresses his belief that predictions of doom in the field of biotechnology due to piracy are unsupported. *See Festo,* 234 F.3d at 597 – 598 (Lourie, J., concurring).

III.

THE PETITION SHOULD BE DENIED

A. In *Festo*, The Federal Circuit Followed The Mandate Of This Court

In *Warner-Jenkinson Company, Inc. v. Hilton Davis Chemical Co.*, 520 US 17, 39 n.8 (1997), this Court directed the Federal Circuit to manage carefully the doctrine of equivalents "to promote certainty, consistency, and reviewability to this area of the law."[5] In this and other passages, this Court made clear that (1) it wanted any inappropriate uncertainty in the application of the doctrine of equivalents to be reigned in by the Federal Circuit and (2) this Court would not "micromanage" the Federal Circuit. *See id.* at 40 ("With these limiting principles as a backdrop, we see no purpose in going further and micromanaging the Federal Circuit's particular word choice for analyzing equivalence. We expect that the Federal Circuit will refine the formulation of the test for equivalence in the orderly course of case-by-case determinations, and we leave such refinement to that court's sound judgment in this area of its special expertise.").

The Federal Circuit in *Festo,* fulfilling its mandate, reviewed the question of whether prosecution history estoppel should unambiguously bar the recovery by a patentee of subject matter outside the words selected by the patentee to narrow its claims, or whether gradations of estoppel apply to such added limitations such that the public must attempt to assess, on a case by case basis, the "degree" of estoppel that a decision maker may decide to apply.

---

[5] Applera notes that a vibrant doctrine of equivalents is dependant on its reliable and certain application. Some have attempted to eliminate legislatively the doctrine, and a sloppy or vague application of the doctrine over time will only encourage such efforts.

The *Festo* decision stems from the Federal Circuit's considered conclusion that attempting to assess the proper "degree" of estoppel on a case by case basis injects intolerable uncertainty into the system. According to the Federal Circuit, extensive experience teaches that there are precious few guides to determine where in the spectrum between the precise words added to the claim and, for example, the prior art, the line between a permissible equivalents argument and a forbidden estoppel exists. *See Festo*, 234 F.3d at 574 – 575 (discussing the "difficulty under the flexible bar approach in predicting with any degree of certainty the scope of surrender that will be found when prosecution history estoppel applies"). The Federal Circuit rejected the "flexible" approach because it determined that it was incompatible with the statutory requirement that claims be definite, and this Court's repeated injunctions in *Warner-Jenkinson* that clear public notice of the scope of patent rights (essentially a government-sponsored grant of exclusive rights to technology) is critical to the success of the patent system. *See id.* at 575 (stating that the flexible bar approach poses a "direct obstacle" to "preserving the notice function of patent claims," and "promoting certainty in patent law.") (internal citations omitted); *see also id.* at 576 – 577.

Thus, the Federal Circuit balanced the competing considerations, and, based upon its "nearly twenty years of experience in performing [its] role as the sole court of appeals for patent matters," refined the law by rejecting the "flexible" approach wherein different gradations of estoppel are assigned on a case by case basis. *Id.* at 574 – 575.

B. The Petition's Unsupported Doomsday Predictions Do Not Justify The Granting Of Certiorari

Petitioner concedes that the unambiguous rule set forth in *Festo* adds "[i]ncreased certainty and predictability" to the

application of the doctrine of equivalents.[6] Petition at 26. Thus, the petition is forced to speculate about a parade of horribles that it predicts will result from *Festo* in the future.

At the outset, this view is distorted by the apparent assumption that the presence of a prosecution history estoppel would preclude any range of equivalents for an amended claim. As explained above, only the added limitation is necessarily the subject of the estoppel, not every element of the claim. Thus, virtually all amended claims still enjoy a range of equivalents for all the claim language that was not part of the narrowing amendment that gives rise to an estoppel.

In any event, at the same time that the petition predicts that the proverbial sky will fall, it claims that the *Festo* rule is novel and untested. This paradox forces the petitioner to argue that consideration of the issues presented cannot meaningfully benefit from percolation or ventilation by lower courts of this "new" rule. However, experience by lower courts will necessarily shed light on the petition's doomsday predictions. Given the relative rarity with which this Court delves into the doctrine of prosecution history estoppel, a well-developed record is indispensable if this Court is to address issues of patent law at this level of granularity. Only then, may the issues raised by the petition be studied and evaluated — in real cases involving real patents, not hypotheticals devised by advocates to make one point or another. *See, e.g., McCray v. New York*, 461 U.S. 961, 963 (1983) (STEVENS, J. respecting the denial of pet. for writs of cert.) ("it is a sound exercise of discretion for the Court to allow the various States to serve as laborato-

[6]Transitory concerns about the "uncertainty" caused by the Federal Circuit's ruling in *Festo* cannot outweigh the importance of reaching the correct result based on actual experience and a developed record. Moreover, such "certainty" arguments are awkward at best coming from those who criticize the certainty-advancing rule of *Festo*.

ries in which the issue receives further study before it is addressed by this Court"); *Lackey v. Texas*, 514 U.S. 1045 (1995) (STEVENS, J. respecting the denial of pet. for writs of cert.) ("Though the importance and novelty of the question presented by this certiorari petition are sufficient to warrant review by this Court, those factors also provide a principled basis for postponing consideration of the issue until after it has been addressed by other courts").

Indeed, the district courts around the country are already shaping the rule of *Festo*. For example, in *Aclara Biosciences, Inc. v. Caliper Technologies Corp.*, 125 F. Supp.2d 391 (N.D. Cal. 2000), Judge Breyer limited the *Festo* doctrine to apply only to the discrete limitation within the claim that was specifically added for reasons of patentability, rather than the entire clause containing that limitation. *See Aclara*, 125 F. Supp.2d at 402 – 403. In *Aclara*, Judge Breyer faced a question left unanswered by the facts presented in *Festo* — whether prosecution history applies only to the precise language added to narrow a claim for reasons related to patentability, or whether it applies to the entire claim element containing that language. Analyzing the Federal Circuit's decision in *Festo*, Judge Breyer noted that "[e]xtending the logic of *Festo* to an entire clause in a claim when only a portion of that claim has been amended" would not advance the goals of eliminating speculation and uncertainty, or that of reinforcing the notice function of the claims. *Id.* at 401 – 402. In addition, Judge Breyer reasoned that because the Federal Circuit did not go so far as to hold that any amendment to any limitation in a claim bars any range of equivalents as to all of the limitations in a claim, the court was obviously "comfortable with making the public read the prosecution history carefully to see which precise segment of a claim was amended and that the court envisioned a narrower understanding of prosecution history estoppel," *Id.* at 401. As such, Judge Breyer held that "prosecution history estoppel under *Festo* must be applied

individually to each of the limitations" within a clause, rather than to the clause as a whole. *Id.* at 402 – 403.

Thus, to the extent that the wisdom of the approach adopted by the Federal Circuit may be subject to question at all, "the likelihood that the issue will be resolved correctly may increase if this Court allows other tribunals 'to serve as laboratories in which the issue receives further study before it is addressed by this Court.' " *Brown v. Texas,* 522 U.S. 940 (1997) (STEVENS, J. respecting the denial of pet. for writs of cert.) (quoting *McCray,* 461 U.S. at 963). Indeed, given the myriad considerations upon which the Court of Appeals based its decision, assessment of the approach adopted by the Federal Circuit would certainly benefit from further study in connection with its application and implementation. *See, e.g., Lackey v. Texas,* 514 U.S. 1045 (1995) ("Petitioner's claim, with its legal complexity and its potential for far-reaching consequences, seems an ideal example of one which would benefit from such further study").

IV.

CONCLUSION

Given that this Court directed the Federal Circuit to evolve patent law to prevent the doctrine of equivalents from causing undue uncertainty, it would be premature to review such evolution on a piecemeal basis. Actual experience by the lower courts with the application of the *Festo* principles will only better position this Court to make judgments in this intricate area of the law, if this Court chooses to address issues of patent law at this level of detail.

Respectfully submitted,

Amicus Curiae
Applera Corporation

MATTHEW D. POWERS
Counsel of Record
EDWARD R. REINES
JOSH A. KREVITT
WEIL, GOTSHAL & MANGES LLP
2882 Sand Hill Road,
Suite 280
Menlo Park, CA 94025
(650) 926-6200

(15)

Supreme Court, U.S.
FILED
MAY 9 2001
OFFICE OF THE CLERK

No. 00-1543

In the Supreme Court of the United States

Festo Corporation.
Petitioner

v.

Shoketsu Kinzoku Kogyo Kabushiki Co., Ltd A/K/A
SMC Corporation and SMC Pneumatics

Respondent

On Petition for Writ of Certiorari to the United States Court of Appeals for the Federal Circuit

---

Brief of Amicus Curiae Intellectual Property Creators in support of Festo's Petition for Writ of Certiorari

David Roy Pressman
1070 Green St. No 1402
San Francisco, CA 94133-5418
(415) 776-3960

Counsel of Record, Amicus Curiae of
Intellectual Property Creators

5614

Table of Contents

Introduction..... 1

Preamble—Under *Festo* The Wright Brothers' Patent Would Have Been Worthless..... 2

An Overview Of The Arguments Presented..... 4

I. Festo is Badly Considered..... 4

1. Festo gives high priority to certainty for the "infringer", none to certainty for the inventor..... 4

2. Festo ignores the fact that an "infringer" has greater maneuverability in preparing for potential patent litigation than the inventor. 5

3. Lourie's concurring opinion in Festo wrongly says that a rigid bar encourages people to invent in the area that would have been included within a flexible bar..... 6

4. Assigning Rights in An Invention (Such As Those Covered By The Doctrine Of Equivalents) To The Public Veils The Real Beneficiary..... 6

I. *Festo* Is Bad Policy 6

1. By Limiting The Scope Of Invention, Festo Takes An Inventor's Private Property Rights..... 6

2. Festo is discourages one of the most fragile and important sources of inventions: small entity and entrepreneurial inventors. 6

3. By decreasing the scope of a patent's protection, Festo reduces the diversity of inventions..... 6

4. Festo makes the patent prosecution process more bureaucratic and expensive. 7

5. As the Constitution and patent law promises inventors property rights in their inventions, the courts have a legal and moral obligation enforce those property rights..... 7

6. Festo subverts the public policy purpose of the patent 7

III. The Federal Circuit Is Behaving Like a Regulatory Body That Has Been Co-Opted By Those It Is Supposed To Regulate. 7
1. From an economic perspective, the Federal Circuit is a regulatory body. *7*
2. The current software patent crisis is largely a result of industry insider judicial lobbying. *8*
IV: The Doctrine Of Equivalents Issue Should Be Decided Immediately. 8

THE ARGUMENTS PRESENTED 8

I. Festo Is Badly Considered 8

1. *Festo* Gives High Priority To Certainty For The "Infringer", None To Certainty For The Inventor 8
2. Festo Ignores The Fact That The "Infringer" Has Greater Maneuverability In Preparing For Potential Patent Litigation Than The Inventor 9
3. Lourie's Concurring Opinion In *Festo* Wrongly Says That A Rigid Bar Encourages People To Invent In The Area Included Within A Flexible Bar. 11
4. Assigning Rights in An Invention (Such As Those Covered By The Doctrine Of Equivalents) To The Public Veils The Real Beneficiary 12

II. *Festo* Is Bad Policy 13

1. By Limiting The Scope Of Invention, Festo Takes An Inventor's Private Property Rights *13*
2. Festo Discourages One Of The Most Fragile And Important Sources Of Inventions: Small Entity And Entrepreneurial Inventors. 13
3. By Decreasing The Scope Of Inventions, *Festo* Decreases The Diversity of Inventions 15
4. *Festo* Makes The Patent Prosecution Process More Bureaucratic And Expensive. 15

5. As the Constitution and patent law promises inventors property rights in their inventions, the courts have a legal and moral obligation enforce those property rights. 16
6. Festo subverts the public policy purpose of the patent law, which is to Encourage Invention, Not Provide A Road Map For Copiers. 16
6. Small Entity Inventors (A Disproportionate Source Of Inventions And The Natural Prey To Big Companies) Should Get The Benefit Of The Doubt In Patent Cases. . 17

III. The Federal Circuit Appears To Be Behaving Like A Regulatory Body That Has Been Co-Opted By Those It Should Regulate. 17

1. Ambition Without Power Cannot Counter Ambition With Power 19

IV: The Doctrine Of Equivalents Issue Should Not Be Left to Fester 20

Conclusion 20

Appendix A: Inventing the Airplane 21

Appendix B: The Software Patent Crisis: A Case Study Of The Damage Done By Unchallenged Lobbying Of The Judiciary By Powerful Interests To Set Patent Precedents. . 25

Appendix C: Recent Federal Circuits Cases Narrowing The Scope Of Patent Claims *Zurko* And Means-Plus-Claims 29

Appendix D: How Legal Complexity Creates A Two-Tier System Of Justice 31

Appendix E: Table Of Insider/Outsider Legal History 34

Insider Outsider Economics 35

Appendix F: Letters Nominating People To The Patent Advisory Board 36

CASES

Chisum, D. The patentability of algorithms, 47 U Pitt. L Review, 959,971, (1986) 27
Control Resources v.Delta Electonic, Inc. and LSI Delta Electronics, Inc and KSU Kiguc Stirage Ststensm CIVIL ACTION NO. 99-11892-WGY U.S. District of Massachessts 19
Diamond v. Diehr, 450 U.S. 175 (1981) 20
Dickinson v. Zurko 119 S. Ct.. 1816, 527 U.S. 150 (1999) ..... passim
Gottschalk v. Benson, 409 U.S. 63 (1972) 20, 26, 27
Panduit Corp. v. Dennison Mfg. Co., 774 F.2d 1082 (1985) 9
Purdue Pharma L.P. v. Faulding Inc., No. 99-1416, -1433 230 F.3d 1320, 56 USPQ2d 1481 28
Valmont Indus., Inc. v. Reinke Mfg. Co., 983 F.2d 1039 (Fed. Cir. 1993) 29
Winner Int'l Royalty Corp. v Wang, 202 F.3d 1340 (Fed. Cir. 2000), cert. denied, 530 U.S. 1238 (2000) 28
Wright Co. v. Paulhan 177 F. 261 (S.D.N.Y. 1910) 3

OTHER AUTHORITIES

Black Edwin, *IBM and the Holocaust: The Strategic Alliance between Nazi Germany and America's Most Powerful Corporation*, Crown, 2001 28
Cerf, Christopher and Victor Navasky, The Experts Speak, VIllard, 1998 8
Crouch, Tom, The Bishop's Boys 23
deSoto, Hernando, The Mystery of Capital 33
Federalist 51 19
Grindly, Peter and David Teece, *Managijng Intellectual Capital*, California Management Review, Vod 39, No2. Winter 1997 13
Heckel, Paul, *The Elements of Friendly Software*, ... 17
Howard, Fred, *Wilbur and Orville*, Knopf, 1988 23
Intellectual Property Creators Amicus Brief in *Zurko* 17

Jewkes, Sawers *and* Stillerman, *The Source of Inventions, Second edition, 1969* 8, 14
Machiavelli, Nicola, *The Prince* 20
Markey, Howard, *Some Patent Problems --Philosophical, Philological, and Procedural* 80 F. R. D. 203 15
Milton, *Paradise Lost*, Book 6 10
New York Times December 10, 1903 21
Samuelson Paul and Willaim Nordhaus McGraw Hill., Economics, 17th Ediiton, Page 195 17
Samuelson, Paul and William Nordhaus, *Economics*, 17th Ediiton, McGraw Hill 18
Statistical Abstract of the United States 13
Stigler, George, *The Theory Of Economic Regulation*, Rand Journal of Economics, Spring 1971 33

Introduction

Intellectual Property Creators (IPC) is submitting an Amicus brief[1] in this case for the same reason we filed a merits brief in the *Dickinson v. Zurko*, 119 S. Ct. 1816, 7 U.S. 150 (1999): Our objective is to present the inventor's perspective on the issue: We strongly believe *Festo* will discourage invention in general, and especially by one of the most productive sources of invention, small entity and entrepreneurial inventors. We emphasize the perspective of the history, sociology and economics of innovation to help the court in understanding the environment of innovation), in which this Court's decision will be interpreted.

Many of IPC's members have been through patent litigation. IPC was founded in 1994.

IPC represents the public policy interests of small entity and entrepreneurial inventors who are usually industry *outsiders* and who are concerned with getting effective legal protection for their inventions. In contrast, Intellectual Property Owners consist, mostly of industry *insiders* for whom a major concern is in protecting existing markets and technologies from business problems created by the innovations of industry outsiders.

---

[1] This brief was not authored in whole or in part by counsel for any party other than the Amicus Curiae. Consent to file this Amicus brief has been obtained by both parties.

Three of IPC's five founding board members, Dr. Damadian, Dr. Greatbatch, and Dr. Rines, are inductees into the National Inventors Hall of Fame.

Paul Heckel, the Founder and President of Intellectual Property Creators (IPC), is the principal author of this amicus brief. Other advisors on this brief include people IPC nominated to the Patent Advisory Committee. These anticipated signatories bring diverse backgrounds that are relevant to the invention process. We had hoped to have them as amici on this brief, but time prevented us from getting their consent. They include a historian of technology, a scholar of the invention process, a former patent commissioner, the developer of the first SBIR (Small Business Innovation Research) program, a former congressional aide on patent legislation, the president of a patent insurance firm, an Academy Award winner, a professor of labor law, and an economist. A brief bio of each of these nominees is included in the nomination letter in Appendix V. All but two are inventors with patents; several had to litigate their patents.[2] Several are lawyers.

The IPC earnestly believes that the Federal Circuit *en banc* in the *Festo* decisions will do great harm to the small and independent inventors. By replacing equitable principles with the rigid rules of regulation, the Federal Circuit has created further obstacles to innovation. The IPC respectfully urges this Court to review the *Festo* decisions and restore the Doctrine of Equivalents.

Preamble—Under *Festo* The Wright Brothers' Patent Would Have Been Worthless

When the Wright Brothers applied for their patent their application was rejected by the Patent Office several times for several reasons including the examiner's disbelief in

[2] We understand that IPC made 14 out of about 60 nominations in 2000. No IPC nominees were appointed to the 9 slots in 2000; all were renominated for the 3 available slots in 2001

whether a heavier-than-air machine could fly[3] (at the time flying machines were regarded by the Patent Office the same way they regarded perpetual motion machines—skeptically.)

While the Wright Bothers contributions in making the first successful airplane were many, the crucial one was the invention of wingwarping as a mechanism of control. Wingwarping was a mechanism to warp an airplane's wings to change their angle of attack into the wind so as to bank the airplane to the right or left. This gave the pilot lateral control for turns and let him recover from wind gusts.

In 1907, almost 4 years after Kitty Hawk, Glenn Curtiss, a manufacturer of motorcycles, at the urging of Alexander Graham Bell, decided to enter the business of manufacturing airplanes. He started the Herring Curtiss Company and raised $360,000. By this time the Wright's patent had issued and presented a problem for Curtiss and other airplane pioneers.

Curtiss decided to try to design around the Wright's wingwarping patent. He invented and got a patent on ailerons, which are control surfaces hinged to the trailing edges of wings. The Wrights sued. In one of several lawsuits (*Wright v. Paulhan*), the decision that ailerons were equivalents to the structure claimed in the Wright patent and therefore infringed the patent was rendered by then District Judge Learned Hand who decided many patent cases. The Wright Brothers had had to amend the claims. Had *Festo* been controlling law, they could not have used the Doctrine Of Equivalents and would have lost their infringement case. Their patent would have been worthless.

Certainly, the patent law should not be structured to achieve a particular result in *Wright v. Paulhan* nor any other individual case. We suggest that what happened to the Wright Brothers, is not an example of what Judge Lourie in his concurrence calls "occasional injustices." Rather, it is

[3] See *The Wright Brothers' Pioneer Patent* by Rodney Worrel, Journal of the American Bar Association, 1979, Vol 65, page 1512.

just the tip of the iceberg of the injustices inventors have faced. At Intellectual Property Creators we know scores of independent inventors who have asserted their patents, and found that the Wright Brothers' experience is a common one: Infringers will do all they can, including lobbying the courts, to steal technology especially when the inventor is weak.

The best inventions are likely to come from outsiders who rejected the mainstream wisdom; they are first disbelieved and then robbed. They will face "infringers" who stayed on the sidelines while others took the risks of inventing, and then when success was clear, rolled over the inventors' patents. Many others denigrated the Wrights at the time—Alfred Zahn, Octave Chanute and Augustus Herring. Henry Ford even lent his patent litigator, W. Benton Crisp to Curtiss to defeat the Wrights' patents. Yet the judgment of history is unambiguous in giving full credit to the Wrights.

The Wright Brothers having made one of the most important inventions of this century faced, not only Rambo lawyering by "infringers," but also fraud by Curtiss, supported by the Smithsonian Institution[4].

An Overview Of The Arguments Presented

IPC presents three basic arguments.

I. Festo is Badly Considered.

1. Festo gives high priority to certainty for the "infringer", none to certainty for the inventor.

In *Festo* the court seeks to reduce uncertainty by promulgating rules that remove uncertainty by drawing an infringement line favoring "infringers."

Corporations do all they can to avoid risk and uncertainty, while risk and uncertainty is inherent to what the

[4] The story of what the Wright Brothers faced is given in more detail in Appendix I. For the record, Chief Justice Rehnquist is the ex officio Chancellor of the Smithsonian.

inventor, especially the entrepreneurial inventor, Doctrine Of Equivalents. This is a niche he fills because others avoid it[5]. That Doctrine Of Equivalents does not mean, however, that the courts should foist the dog food of uncertainty off on inventors because they are used to eating it. Indeed, since inventors fill a societal need for risk taking, when an inventor succeeds, it is even more important to reward them lest such a societal need be discouraged.

2. Festo ignores the fact that an "infringer" has greater maneuverability in preparing for potential patent litigation than the inventor.

An "infringer" is like a bird while the patent holder is like a tree. An "infringer" can take out a license, keep outside the flexible bar or (usually) design around a patent to avoid infringement. He[6] has maneuverability. Moreover "infringers" can usually do all this in the full light of day when much more is known than when the patent was filed and the claims written. The inventor in contrast is like a tree stuck where it was planted with its original application and claims.

In patent infringement, as in the law of the sea: the more maneuverable should give the right of way.

[5] Another possibility is a recently identified risk-taking gene, which probably occurs disproportionately in inventors. The biological explanation is that some amount of risk-taking benefits society as a whole.

[6] This brief uses sexist language in that "he" is used where "he or her" was intended. In this, this brief's author has found himself committing the very same offense about which he is writing this brief: thoughtless bias and sloppy thinking that serves to perpetuate a two-tier system of elites and non-elites. In one case the non-elites are women, in the other they are non-establishment inventors. This brief's author apologizes to Justices O'Connor and Ginsberg, the women law clerks, and to all women. We have, however, left it in to draw attention to how such a subtle bias can develop anyplace language is used, such as with judicial decisions.

3. Lourie's concurring opinion in* Festo *wrongly says that a rigid bar encourages people to invent in the area that would have been included within a flexible bar.

The opposite is true: A rigid bar actually discourages invention and associated entrepreneurial startups. It is rather a flexible bar that encourages innovation.

4. Assigning Rights in An Invention (Such As Those Covered By The Doctrine Of Equivalents) To The Public Veils The Real Beneficiary

The real beneficiaries of *Festo* are "infringers" who have the manufacturing, financial and marketing capability to exploit an invention. This is obscured by referring to the rights covered by the Doctrine Of Equivalents as being assigned to "the public".

I. *Festo* Is Bad Policy

1. By Limiting The Scope Of Invention, Festo Takes An Inventor's Private Property Rights

This subverts an important principle underlying the American form of government—private property.

2. Festo discourages one of the most fragile and important sources of inventions: small entity and entrepreneurial inventors.

Small entity inventors have historically made a disproportional share of fundamental inventions, especially high risk, low data, paradigm shifting and disruptive inventions, as opposed to low risk, high data, and non-boat-rocking inventions. Yet small entity inventors usually have limited financial, marketing, and manufacturing capability and so for them a strong patent that gives broad coverage is crucial.

3. By decreasing the scope of* a *patent's protection,* Festo *reduces the diversity of inventions.

A flexible bar increases the scope of an invention's claims and so encourages others to make their inventions at a greater distance from existing inventions. This increases the

diversity of inventions from which the public can choose. With a rigid bar, people are motivated to invent close to existing inventions where a market is proven to exist, thus decreasing the diversity of inventions.

4. Festo makes the patent prosecution process more bureaucratic and expensive.

Inventors will incur extra cost in trying to avoid amending their patent claim so they won't lose the ability to invoke the Doctrine Of Equivalents. This added work decreases efficiency. This appears not to have been considered as this increased cost is borne by the 99 percent of patents that are not litigated. With a flexible bar, on the other hand, the costs of uncertainty are borne during litigation by only the one percent of patents that are litigated.

5. As the Constitution and patent law promises inventors property rights in their inventions, the courts have a legal and moral obligation to enforce those property rights.

In *Festo* the Federal Circuit throws an obstacle in the path of inventors enforcing their constitutional rights.

6. Festo subverts the public policy purpose of the patent.

The Constitution grants inventors the rights to their inventions "To promote the progress of science and useful arts." In denying part of inventors' rights, *Festo* subverts the express intent of the Constitution.

III. The Federal Circuit Is Behaving Like a Regulatory Body That Has Been Co-Opted By Those It Is Supposed To Regulate.

1. From an economic perspective, the Federal Circuit is a regulatory body.

The economics of regulation teaches that regulatory bodies--bodies that determine the rules of market inclusion—develop rules that favor industry insiders and disfavor outsiders. The Federal Circuit, in setting precedents, defines the scope of patents that control entry and exit to those

industry segments where patents are important. *Festo* is the most recent precedent favoring industry insiders.

2. The current software patent crisis is largely a result of industry insider judicial lobbying.

The concept of a co-opted court setting patent precedents favoring industry insiders has happened before.

IV: The Doctrine Of Equivalents Issue Should Be Decided Immediately.

THE ARGUMENTS PRESENTED

I. Festo Is Badly Considered

1. *Festo* Gives High Priority To Certainty For The "Infringer", None To Certainty For The Inventor

Developing and marketing any product is filled with uncertainty. Can it be made to work? Is there a market for it? (e.g., will people buy it?) Will it be profitable? Are there effective marketing channels? Will it infringe other patents? What changes will have to be made to gain market acceptance?

The Wright Brothers saw airplanes used, not as bombers, but for aerial reconnaissance making wars less likely. In the 1969 edition of *The Sources of Invention*, Jewkes, Sawers and Stillerman said that they had decided to exclude the digital computer from its 50 case studies of inventions in their 1958 edition because it wasn't that important. In *The Experts Speak*, Christopher Cerf and Victor Navasky compiled a compendium of embarrassing quotes of authoritative figures. Its quotes on inventions[7] are a useful antidote to those who describe inventions as "obvious." Quotes uttered by Lord Kelvin, Thomas Edison and even Wilbur Wright less than10 years before Kitty Hawk speak to the impossibility of flight in the near future.

[7] Pages 225-281

Once an invention proves to work and a market is shown to exist, established companies will rush to develop similar products now that the uncertainty has been eliminated.

At this point the inventor faces the uncertainty that his patent will be found invalid or not infringed due to prior art of which he was unaware, technical advances, or an inability to raise money to grow a business or sue infringers.[8]

Festo exhibits concern for the uncertainty potential "infringers" face, but does not balance that against the uncertainties that an inventor faces.

2. Festo Ignores The Fact That The "Infringer" Has Greater Maneuverability In Preparing For Potential Patent Litigation Than The Inventor.

An inventor's crucial decisions are made during patent prosecution in the morning twilight, while "infringers" get to make their decisions in the full light of day. Moreover, inventor's decisions are made when success is uncertain and the budget is limited, while the "infringer" makes his decisions after an invention's success is proven, and the budget is ample. This asymmetry of illumination occurs in both defining the limits of a patent's scope during prosecution and in determining obviousness.

According to *Panduit* determining the obviousness of an invention requires that "impermissible hindsight" not be used: An examiner or a court must (try to) remove from its mind any knowledge that was not available when the invention was made. This is difficult to do. It is like after

[8] Deciding to infringe is often a good "business decision" as the "infringer" is usually better financed than the inventor, and litigation has the added advantage to an infringer of diverting an inventor's time and resources from building a business. For the infringer, the downside is losing an infringement case, and the cost of this is often small compared to the benefit of the market share obtained during the litigation.

being told not to think of elephants being able to erase elephants from your mind and not think of them.

Many inventions are obvious once the key ideas have entered people's minds. Orville Wright referred to a passage from Paradise Lost.[9]

> The' invention all admired, and each, how he
> To be the' inventor miss'd, so easier it seemed
> Once found, which yet unfound most would have thought
> Impossible: ...

In biasing the rules so an "infringer" can easily design around a patent, the inventor is forced to fight an unequal battle: the inventor must commit himself in his specification and his claims while he is stumbling around in the morning twilight of his invention usually with little experience in the process. The airplane was the Wright's first patent. "Infringers" (and the courts), get to make their decisions later in the light of day when the prior art and newer technologies have been developed, the initial markets have been developed and so it is much easier to see what is essential to the invention and what is not. Yet, Judge Lourie seems oblivious to the asymmetry of the illumination. In his concurring opinion, he says:

> Any patent attorney who fails to claim all that his inventor has invented, and that is patentable, is ill advised to settle for a narrower claim than he considers justified on the assumption that he can rely on the Doctrine of Equivalents for broader coverage.

But how can he claim all he invented if in the process he risks a rejection, which requires an amendment, which would preclude using the Doctrine Of Equivalents?

The inventor's job is not easy. Judge Learned Hand said the patent was the most difficult contract to draft.

The inventor is stuck with his original specification and his claims written in dawn's twilight.[10] The potential

[9] Milton, *Paradise Lost*, Book 6. See also *Wilbur and Orville*, page 422

"infringer," in contrast, gets to plan his attack in the full light of day when more is known about the invention, related art and possible markets. Moreover, once market risk is eliminated, substantial funds are likely to be available.

Patent Litigation is an unequal and unfair fight. The "infringer" has much maneuvering room. He can stay well outside the limits of the claims rather than risk coming dangerously close, he can license the patent; or he can use non-infringing technologies. According to economist Richard Levin, an analysis of 127 cases of patent infringement showed that the infringer could have achieved designed around the original product in all but 12 cases. Why didn't these "infringers" avoid infringement when they could have? Is it because the patent system is so weak as to be all but useless, or is it because infringers are arrogant and lazy?

The law of the sea requires that more maneuverable vessels yield the right of way to the less maneuverable ones. The same law governs airplanes. When someone designs around someone else's patent, the patentholder has little maneuvering room. The law of patents, like the law of the sea, should favor the less maneuverable.

3. Lourie's Concurring Opinion In *Festo* Wrongly Says That A Rigid Bar Encourages People To Invent In The Area Included Within A Flexible Bar.

The opposite is true: A narrow scope of claim interpretation (such as a rigid bar creates) discourages invention by leaving gaping holes in his protection and increasing the uncertainty that he will profit from his inventive contribution. The Wright Brothers' patent would have been worthless if the court had not held that Curtiss' ailerons were not an equivalent. Innovation is discouraged when people making significant inventions find the courts deny them the property rights to their inventions.

[10] An exception is that during the first 2 years after a patent issues, the inventor may file a broadening reissue.

Far from discouraging invention, a wide scope of claim interpretation, such as a flexible bar creates, encourages inventors to patent inside the broader scope covered by the Doctrine Of Equivalents as it gives them negotiating power--indeed, it is quite common for two companies to have blocking patents on each other. Curtiss, for example, invented and patented ailerons (Curtiss, Patent No. 1,011,106) within the scope of the Doctrine Of Equivalents on the Wright Brothers' patent.

4. Assigning Rights in An Invention (Such As Those Covered By The Doctrine Of Equivalents) To The Public Veils The Real Beneficiary

An inventor faces a major problem in trying to capture a legal right to a substantial part of the economic value of his invention. The normal mechanism for doing this is the claim language of a patent, but such language rarely covers the full scope of the inventor's contribution. For a variety of reasons, such as poor patent drafting, narrow claim interpretation or information just left out of the specification, much of the value of an invention can end in the public domain. While the public is an ultimate beneficiary, the "infringer" benefits two ways: First, the inventions will likely show up in what he makes and profits from.

Second, he denies the inventor a head start in business competition that a patent is supposed to give the inventor. Often the inventor is a single individual that is neophyte in the business world; his expertise is in his inventiveness and technology and he is bound to lose a fight with an "infringer" where the battle is fought on business experience and expertise. To have a reasonable chance of success, an inventor must either have the power of a patent to get a head start so he can learn business skills or hire business expertise and build an organization before having to fight infringers.

But the courts make it difficult for an inventor to enforce his property rights to his inventions in a timely way. This ignores the advice of Machiavelli:

> "But above all things [The Prince] must keep his hands off the property of others.... pretexts for [an infringer's] taking away the property are never wanting; for he who has once begun to live by robbery will always find pretexts for seizing what belongs to others."[11]

In summary, the idea of assigning rights to a new invention to the public, as is done with a rigid bar, is misleading. From a practical point of view, such rights are given to the inventor's competitors to the inventor's great disadvantage. This advances one of the major objectives of large companies: Design Freedom.[12]

II. *Festo* Is Bad Policy

1. By Limiting The Scope Of Invention, Festo Takes An Inventor's Private Property Rights

This subverts and conflicts with private property rights. Under the law of mineral rights, someone who owns the mineral rights in a piece of land does not have to list all the different minerals to which it is claiming rights, it can own rights to all minerals without enumerating those minerals. Yet the requirement of *Festo* in taking such a narrow view of the Doctrine of Equivalents amounts to having to enumerate all minerals to which a right is claimed.

2. Festo Discourages One Of The Most Fragile And Important Sources Of Inventions: Small Entity And Entrepreneurial Inventors.

As an indication of the value of inventions to society, in the year 2000, the United States spends about $75 billion[13] on research and development. In *The Sources of Invention*, Jewkes, et al, ventured a few words for policymakers.[14]

---

[11] Machiavelli *The Prince*, Chapter17
[12] Grindly, Peter and David Teece, *Managing Intellectual Capital*, California Management Review, Vol 39, No2. Winter 1997, page 12.
[13] Statistical Abstract of the United States
[14] Page 228

Certain conclusions [can] be put forward with some confidence:

1. The forces which make for innovation are so numerous and intricate that they are not fully understood. ...
2. Governments, therefore, in seeking to encourage innovation should set down as their first aim the avoidance of harm, ...
3. There can be no doubt that some of the ideas [that] have been highly influential in the last two decades have been unsound. They must have done damage either by obstructing innovation altogether or by encouraging it in one form but only at the expense of doing harm to it elsewhere.
4. It cannot be disputed that innovations and discoveries have had, and continue to have many sources. It may be tempting to argue that one or [the] other of these sources is more fruitful than others and should be stimulated even at the expense of the rest. Our impressions are that, given the present state of knowledge, it is safer to strive to keep all the sources open since competition strengthens the total flow of new ideas.

Independent and entrepreneurial inventors are a particularly important source of inventions to encourage, since, compared to corporation, and government funded R&D, they tend to attack different kinds of problems or use different techniques (they are much less formal). They are particularly successful in attacking high risk, low data and paradigm shifting inventions. Strong patents, and a strong Doctrine Of Equivalents are vital for such inventors to succeed. Howard Markey, the founding Chief Judge of the Federal Circuit made this point clearly:

> Many giant corporations have no need of a patent system. They may obtain patents, but only as a defense against some little machine shop operator who might otherwise invent and patent something the public would

> demand and the big corporation would have to negotiate for, instead of just adding the item to its product line. Many large corporations would be glad to compete on size, nationwide service, high volume, strong finance, and prompt delivery. They can kill off smaller competitors on any of those bases, unless the small competitor has a patent on a product somebody wants to buy.[15]

The Wright Brothers took the high risk, low data path of focusing lateral control as the critical factor ignoring the lower risk, path of mainstream wisdom that stability was critical, and therein lay their success.

3. By Decreasing The Scope Of Inventions, *Festo* Decreases The Diversity of Inventions.

The natural tendency is to invent where a market is known to exist and there are less technical risks. With *Festo's* rigid bar, this means inventing just outside the claims where any invention will be less original. The flexible bar encourages others to invent at a greater distance from existing inventions, resulting in greater diversity. This is likely to increase both the number of solutions to a problem, and the number of problems solved.

4. *Festo* Makes The Patent Prosecution Process More Bureaucratic And Expensive.

Under *Festo*, the gamesmanship will increase, as patent prosecutors will have to be careful to avoid amending their patents as this would give up their rights under the Doctrine Of Equivalents. We have heard that patent examiners let marginal claims go through rather than create a bar to the Doctrine Of Equivalents. This would discourage clarifying amendments, lest the inventor lose the Doctrine Of Equivalents. This is inefficient is that this burden occurs

---

[15] Some Patent Problems --Philosophical, Philological, and Procedural 80 F. R. D. 203, p. 210

during the application process, rather than during litigation where only one percent of the patents would be involved.

5. As the Constitution and patent law promises inventors property rights in their inventions, the courts have a legal and moral obligation enforce those property rights.

For a patent to serve its purpose it must be respected as property. However, patents, even without *Festo*, unless they have been successfully litigated, are little better than Confederate money. The legal system makes patent enforcement difficult, expensive, time-consuming and uncertain of success. For an independent inventor, trying to use a patent as collateral to raise money to assert one's rights requires finding people who have money, and believe "the South will rise again." This greatly devalues the patent. Corporations, in contrast usually have the financial assets to fight infringement suits. (For more detail see Appendix D.)

Festo just throws one more boulder on the barrier between insiders at a time when Congress and the courts should be removing boulders.

6. Festo subverts the public policy purpose of the patent law, which is to Encourage Invention, Not Provide A Road Map For Copiers.

In reading the *Festo* decision and its quest for certainty one would get the feeling that the objective of the patent law is to provide a roadmap for copiers by removing any uncertainty of what the line of infringement is.

According to the Constitution, the patent system should "promote the progress of science and useful arts." The Doesn't this suggest that where there is doubt in the balance between the inventor and "infringer," the courts should resolve doubt in favor of the inventor?[16]

---

[16] This Court should know that two of the Founders, Benjamin Franklin and Thomas Jefferson were inventors of substantial capabilities and so might have caused the Constitution to be 'unfairly biased' in favor of inventors.

6. Small Entity Inventors (A Disproportionate Source Of Inventions And The Natural Prey To Big Companies) Should Get The Benefit Of The Doubt In Patent Cases.

According the Samuelson and Nordhaus:[17]

...Studies indicate that small firms are responsible for a disproportionate share of major inventions and innovations. When John Jewkes and his colleagues traced the history of most important inventions of this century they found that less than half came from the laboratories of large corporations. The importance of the small inventor has been confirmed in recent years by the major new products that seem to arise from nowhere...

It is particularly relevant that the nature of invention is that it generally comes from people who will challenge the mainstream wisdom, and it comes from people who are outsiders the industry involved.[18]

Alcorn's law, named for Al Alcorn a founder of Atari and an inventor of Pong, the first video game, observed that: "All progress is due to people who don't know what they are doing, because if they did they would never take the risks."[19]

III. The Federal Circuit Appears To Be Behaving Like A Regulatory Body That Has Been Co-Opted By Those It Should Regulate.

To an economist, patent law is a special case of the economics of regulation, which involves "the control of process, entry and exit conditions and standards of service." According to Samuelson and Nordhaus:

> We should recognize, however, that regulation creates profits and thereby produces interest groups, which have vested interests in the regulatory outcomes. Sometimes,

---

[17] Samuelson and Nordhaus, *Economics* 17th Edition by Samuelson and Nordhaus McGraw Hill. Page 195. Samuelson was the sole author of the earlier editions.

[18] See Intellectual Property Creators, Amicus Brief in *Zurko*, page 23.

[19] Heckel, *The Elements of Friendly Software*, page 293

because of the interaction between regulations and politics, regulation has the perverse result of restricting entry into the regulated industry that actually raises prices and profits for established companies... Economists who emphasize the anticompetitive aspect of regulation make the following argument:

> You say that regulation is in the interest of consumers and workers. Don't believe it. Rather, regulation is designed to boost the outcome to producers in limiting entry and preventing competition in the regulated industry. Any gains to consumers or workers is purely accidental. The historical record shows that there is much truth to this view. ...

A recent example of a regulatory program benefiting the industry at the expense of taxpayers came in the savings and loan industry. ... It provided a governmental guarantee on bank deposits without ensuring that banks behaved prudently with the insured deposits. .... Because of intense lobbying and generous campaign contributions, appropriate government action to stop the wasteful practices was delayed for years. Who were the major beneficiaries of the corrupt regulator regime in the banking industry? Primarily bankers, banks and bank stockholders. Who were the losers? The taxpayers.[20]

IPC's view is that the Federal Circuit is behaving like a regulatory body responding, consciously or unconsciously, to the pressures of industry insiders in creating precedents that favor industry insiders and disfavor the outsiders.

Appendix C describes how this has been happening in post-*Zurko* decisions.

As Judge Young said in *Control Resources*:

> Almost since its inception, the Federal Circuit has been dogged with criticism for straying from the path carefully delineated for appellate tribunals. Disappointed litigants and commentators alike have criticized the court for fact-finding and other forms of hyperactive judging Increasingly, the bar is expressing concern over the court's decision-making procedures and its apparent willingness to take over the roles of patent examiner, advocate and trier of fact. (Citations omitted)

[20] Samuelson and Nordhaus, p 347

1. Ambition Without Power Cannot Counter Ambition With Power.

That interests influence the system to benefit themselves at the expense of others is central to the discussion of the separation of powers in Federalist 51:

> The provision for defense must... be made commensurate to the danger of attack. Ambition must be made to counteract ambition... This policy of supplying, by opposite and rival interests, the defect of better motives, might be traced through the whole system of human affairs, private as well as public [emphasis added]. .... It is of great importance in a republic ... to guard one part of the society against the injustice of the other part.

The courts have often recognized that society is best served if the vulnerable are given a "provision for defense" lest the powerful take advantage of them. This realization first surfaced slowly, usually in dissents.[21]

Inventions come disproportionably from small inventors. The complexities and uncertainties of litigation, low barriers to entry of nascent markets, and the asymmetry of power all make them vulnerable. Worse yet, the rules are determined less by nature then by industry insiders. As Nicola Machiavelli said:

> There is nothing more difficult to carry out, nor more doubtful of success, nor more dangerous to handle, than to initiate a new order of things. For the reformer has enemies in all those who profit by the old order, and only

[21] Holmes in *Lochner v New York*, 198 U.S. 45 (1905) (USSC+), or Harlan in *Plessy v. Ferguson*, 163 U.S. 537 (1896)

> lukewarm defenders in those who would profit by the new order; this lukewarmness arising partly from fear of their adversaries, who have laws in their favor; and partly from the incredulity of mankind who do not truly believe in anything new until they have had actual experience of it.

In a conflict between insiders and outsiders, ambition without power is insufficient to combat ambition with power.

IV: The Doctrine Of Equivalents Issue Should Not Be Left to Fester

Festo is festering; not only is it ripe for consideration, rot is setting in. The difficulties and expense for inventors, patent lawyers, and patent examiners is increasing. *Festo* will, like prohibition, fester until it is carefully considered. Undoing *Festo* will be a major undertaking if not done now. It could do as much or more damage than the flip-flops of *Gottschalk v. Benson* and *Diamond v. Diehr* and the 18th and 21st Amendments did. History suggests that this Court should act now rather than wait and lett the issue continue to fester.

Conclusion

For the reasons set forth above, IPC respectfully requests the Supreme Court grant certiorari in *Festo*

APPENDIX

Appendix A: Inventing the Airplane

On Saturday, August 8, 1907, at about 6:30 p.m. Wilbur Wright ciimbed aboard his Wright flyer on a racetrack near Le Mans, France. Many had heard of the Wright Brothers' claims to having built successful flying machines, but most thought their claims were bluff. Over the previous few years more and more aviators had built and flown airplanes -- the previous month Louis Blériot had flown for 8-1/2 minutes.

Four years earlier, the Wrights made their famous 59-second flight at Kitty Hawk. Although they had notified the press, except for a few inaccurate stories, the press ignored their flight, probably because many fliers had made claims that proved false. Only a few weeks earlier, Samuel Pierpoint Langley, astronomer, head of the Smithsonian Institute, and the leading aviation researcher, after getting a $50,000 Congressional appropriation, had spent several years developing and then test flying his Aerodrome. It failed ignominiously, belly flopping into the Potomac causing those in the establishment to doubt flight was possible in the foreseeable future.[1]

The Wright Brothers, working outside the mainstream of aviation research, had built the plane they flew at Kitty Hawk for about $1100 (to Langley's $50,000). They had rejected the mainstream wisdom, which was that the key problem was achieving aircraft stability. Researching the problem, the Wright Brothers concluded that the establishment wisdom was wrong: the key problem was

---

[1] " According to the *New York Times* of December 10, 1903, "We hope that Professor Langley will not put his substantial greatness as a scientist in further peril by continuing to waste his time and the money involved in further air experiments. Life is short, and he is capable of services to humanity incomparably greater than can be expected to result from trying to fly. For students and investigators of the Langley type there are more useful employments with fewer disappointments and mortifications than have been the portion of aerial navigators since the days of Iccarus."

achieving lateral control of the plane. Once that problem was solved, other problems such as stability would fall into place. They pursued this wingwarping concept starting with kites, then unmanned gliders, then manned gliders and finally, at Kitty Hawk, powered manned gliders.

The Wrights made many important inventions to build a working airplane, but the major one was wingwarping. It is the concept used in all fixed wing airplanes today. After Kitty Hawk the Wright Brothers spent the next several years at Hoffman Field in Dayton, greatly improving their airplane, getting a patent, and observing that none of the other airplane enthusiasts seem to have been working on the key problem of control. They deliberately kept a low profile--once other aviators saw them fly, the key principle would be obvious.

The Wright Brothers decided to go public: Wilbur at Le Mans in Europe and, a few days later, Orville in the United States. Wilbur took off at a racetrack near La Mans in France in front of a crowd of a few hundred people who came to see various air exhibitions. After taking off, Wilbur, banked to the right and headed for a grove of poplars. The crowd gasped. Having seen the terrible control of other airplanes, the crowd expecting him to crash into the poplars. Bur Wilbur banked right again made a full circle and landed near where he took off. They flight lasted 1 minute and 45 seconds.

The crowd went wild. They could only appreciate what the Wright Brothers had done when they could evaluate it in front of the background of its absence. Wilbur's plane had flown like a bird. As one pilot, Paul Zens, said that day, "Mr. Wright has us all in his hands". Over the next several months, Wilbur gave exhibitions throughout Europe, often carrying passengers. The Wrights were widely honored in both Europe and America. Fliers everywhere began modifying their planes to incorporate what they learned from observing the Wright airplanes.

Two bicycle mechanics from Dayton, outsiders to aviation, with limited funds and rejecting the mainstream wisdom of the nascent field of aviation, had rocketed past well-financed insiders.

But would they reap a financial reward for their invention? Didn't the Founders instigate the patent system to reward such inventors? It was not that simple. The principle of wingwarping was impossible to keep secret. The nature of the market for the airplane was still uncertain. The mainstream wisdom was that airplanes would advance the cause of peace--reconnaissance airplanes would make it possible to observe one's enemies. The idea of dropping bombs came along later, suggesting the difficulty writing a patent application.

Glenn Curtiss founded the Herring-Curtiss Company in 1909 to manufacture airplanes. The Wright brothers sued him for patent infringement and won. He decided on another tack to get rid of the Wright Brothers' patent. While Langley whose Aerodrome flight in 1903 had proven such a dismal failure, he was now dead; the Smithsonian had an institutional interest in glorifying Langley's place in aviation. So they let Curtiss rebuild and test fly Langley's heavily damaged plane to see if it would have flown in 1903. If it could be flown, that could be used to invalidate the Wright Brothers patent.[2]

Curtiss did not just reconstruct the plane, but, deceitfully, and with the knowledge of aeronautics gained in the intervening years, Curtiss made several changes from the original design that improved its aerodynamics. Even with the modifications, whether or not the Aerodrome flew is a matter of controversy. It took off just outside of camera range. The Wrights called Curtiss on his deceit and the controversy of who flew first continued. It was finally

---

[2] Most of the information in this Appendix was taken from *Wilbur and Orville* by Fred Howard, and *The Bishop's Boys* by Tom Crouch.

settled in 1942 when the Smithsonian published an article, which detailed the changes in the design and admitted the Wright Brothers were indeed first. By that time Wilber had been dead for 30 years. He died of typhoid fever in 1912—Orville always felt that the stress of their patent litigation, weakened Wilbur and thus main him vulnerable to typhoid fever. Later Orville left the airplane business selling their patent rights for about $1.5 million dollars—a large sum in those days, but barely enough to pursue a patent lawsuit today.

Appendix B: The Software Patent Crisis: A Case Study Of The Damage Done By Unchallenged Lobbying Of The Judiciary By Powerful Interests To Set Patent Precedents.

An example of the great damage done by unchallenged industry lobbying on patent jurisprudence occurred with the patentability of software as a result of lobbying efforts by IBM.[1]

In his book,[2] this brief's author described what happened: In the late 1960s when IBM's internal policy was that software should not be patentable. Shortly thereafter, IBM

---

[1] We understand that IBM will be filing an amicus brief with this Court. It had filed one with the Federal Circuit in *Festo* in which it cited its invention of the computer disk (2,810,900) as evidence of its expertise in innovation. We present some additional facts so this Court can put IBM's contribution and business policies in perspective: In *Inventing for Fun and Profit (San Francisco Press, Inc, 1990)*, the well known inventor Jacob Rabinow describes his invention of the disk drive (Patent Number 2,690,913) and his unsuccessful attempts to sell it to IBM several years before IBM introduced its first disk drive the RAMAC. (Page 47)

In explaining the history of IBM's development of the disk drive, Jewkes et al, quote Congressional Committee testimony:

> The disk drive memory unit, the heart of today's random access computer is not the logical outcome of a decision made by IBM management. It was developed in one of our laboratories as a bootleg project—over the stern waning from management that the project had to be dropped because of budget difficulties A handful of men ignored the warning. They broke the rules. They risked their jobs to work on a project they believed in.

[2] *The Elements of Friendly Software* by Paul Heckel, Sybex, 1991.This Court should know the way this brief's author was treated by IBM when he attempted to enforce his patents against IBM, has both biased him against IBM (See A Case Study in Defending One's Rights: Negotiating with IBM in that book) and motivated him to pursue public policy inventor issues.

vice president, J. W. Birkenstock, chaired a presidential commission on the patent system that recommended that software should not be patentable. We expect that the other commission members deferred to IBM's expertise on software, just as members of a commission designing an aviary would defer to its most knowledgeable member on birds: the cat.

Congress rejected this view, but three paragraphs of the Commission's recommendations (e.g., IBM's corporate policy) found their way into *Gottschalk v. Benson*, the Supreme Court Decision that limited the patentability of software. At this time IBM had 70% of the computer market, so it is not surprising that CBEMA, the Computer Business Equipment Manufacturers Association filed an amicus curiae brief against software patents in *Benson*.

From this historical perspective we can see that the conventional wisdom that "software has not been patentable," should be more accurately stated, as "it was not in the interest of IBM or other computer manufacturers for people to think software is patentable." We have never seen it pointed out in the debate on software patents that the idea that software is not patentable subject matter was formed in the crucible of IBM's self-interest and corporate policies of an earlier time.

IBM and CBEMA have now rejected [this view]. But the damage has been done. The PTO and the industry have not taken software patents seriously until recently, which explains the problems the PTO has had in examining patents and the prejudice against software inventors who assert their patent rights. Many in the software community have been suckered into believing software should not be patentable, while IBM has aggressively but

quietly been getting software patents and become the company with the largest software sales.[3]

Donald Chisum, who we understand will be filing an amicus brief in *Festo* on behalf of Chiron, has described the legal history of software patents in some detail.[4] We believe had *Gottschalk v. Benson* held software patentable; the computer industry would have evolved differently with less concentration of power and less turbulence. We do not believe, for example that one company, Microsoft, which has not been innovative, would have been so dominant.[5] Interestingly, Justice Douglas, the author of *Gottschalk v. Benson*, was one of the two dissents in *Graver Tank*, a dissenting opinion whose reasoning is resurrected in the *Festo* opinion.[6]

---

[3] Heckel, Paul, *Debunking the Software Patent Myths*, Communications of the ACM, June 1992.

[4] Chisum, D. The patentability of algorithms, 47 U Pitt. L Review, 959,971, (1986)

[5] To those of us in the personal computer industry, Microsoft has always been a copier and not an innovator. This point is reflected in an Amicus Brief, William Nordhaus filed with the Court in U.S. v. Microsoft.

> "the innovation defense - as a variant of the "good trust" gambit (7) - was central to AT&T's arguments during its antitrust case. Yet it was not sufficient to prevent this District Court from ultimately concluding that a breakup was warranted. Second, while we do not gainsay Microsoft's impressive talents in developing and marketing software, Microsoft's innovations pale beside those of the Bell System.

[6] That Justice Douglas who seems to have so often been the advocate of the little guy in many areas has consonantly been anti-patent in his decisions is at first perplexing. However, one explanation may be that Justice Douglas, who headed the Securities and Exchange Commission, before he ascended to the Bench, had much experience with the machinations of big corporations to defraud the powerless. He saw patents only as a weapon big companies wield to maintain their market power (which they certainly do) but not as powerful stimulants to the powerless to develop new inventions and new industries.

In deciding how much IBM's self-interest is restrained by ethics, this Court is referred to the recently published *IBM and the Holocaust: The Strategic Alliance between Nazi Germany and America's Most Powerful Corporation.*[7]

[7] (At the time the Catholic parents of the author of this brief were acting as sponsors so a Jewish Family could escape to this country from Nazi Germany, Thomas Watson and IBM were actively helping the Nazi's annihilate Jews. Knowing my parents, Oskar Schindler, and thousands of other little people took a stand against the forces of evil, helped motive me to pursue the Quixotic fight for justice for independent inventors.)

Appendix C: Recent Federal Circuits Cases Narrowing The Scope Of Patent Claims *Zurko* And Means-Plus-Claims

The Federal Circuit has taken several opportunities to narrow the protection inventors get. One example of such a case is *Dickinson v. Zurko.* The Federal Circuit in a 12-0 decision ruled that the standard of review of patent validity as *de novo* rather than according to the Administrative Procedures Act which requires deference to agency decisions. The APA review is preferable for inventors (as we argued in our amicus brief on *Zurko*) as it increases certainty, as the case Doctrine Of Equivalents s not have to be retried in a district court infringement action or at the appellate level. The time and cost of these duplicative ad judicatory procedures are particularly devastating to small entity inventors and other outsiders who can ill afford the time (the patent term is running out), money and uncertainly involved. This Court overturned the Federal Circuit in *Zurko,* a direct appeal case. However, the Federal Circuit declined to apply the *Zurko* standard of review to cases on appeal from district courts. In *Purdue Pharma* the Federal Circuit found that *Zurko* was not applicable. In *Winner v. Wang* the Federal Circuit refused to apply *Zurko* on an appeal from an interference hearing. *Zurko* has become useless to inventors. It applies in the rare cases of direct appeals from the PTO to the Federal Circuit on patent validity, but not on appeals from the district courts in infringement cases where validity is almost always challenged.

Another area where the Federal Circuit has narrowed patent scope to take inventors rights away is in means-plus-function claims[1]. Here the Federal Circuit held that a means

[1] See *Valmont Indus., Inc. v. Reinke Mfg. Co.,* 983 F.2d 1039 (Fed. Cir. 1993)

plus function claim Doctrine Of Equivalents s not mean what it means in a plain English. Rather, it must be narrowed, not by the prior art, but to the specific means described in the patent application.

Appendix D: How Legal Complexity Creates A Two-Tier System Of Justice

Excessively complex legal processes that effectively eliminate one's legal rights to property occur in many places and times. Generally the effect is to have the legal system that on a practical basis creates a two tiers system of insiders who comply with one set of laws, while requiring outsiders to comply with another set of laws. Historically this two-tier system has been enforced by seemingly impartial, but in fact discriminatory requirements against blacks (requiring as condition of voter registration that an applicant's grandfather have been registered), or women (requiring jobseekers to have certain, unnecessary, qualifications).

Appendix III lists several examples of such insider outsider divisions. A particularly egregious example of a complexity barrier creating a two-tier system at great economic cost to society is the barrier between the elite and the poor in Third World Countries. The Peruvian economist Hernando deSoto describes the tremendous cost of this barrier in a book, *The Mystery of Capita, a book that* contained jacket blurbs from Milton Freedman, Margaret Thatcher, Walter Wriston and Javier Perez de Cuellar. Hernando deSoto set out to discover "why capitalism triumphs in the West and fails everywhere else." He found that the problem was the excessively bureaucratic legal mechanisms for securing private property rights that courts would enforce. These mechanisms act like spider webs entrapping all the little insects, but lets the big ones break through. deSoto surveyed five Third World cities to determine both the complicity involved in securing rights and the value of what he calls hidden capital-- capital represented by property and businesses that were not registered with the state.

According to deSoto "In Egypt, for example, the wealth that the poor have accumulated is worth fifty-five times all

the direct foreign investment recorded there, including the Suez Canal and the Aswan dam." He found that the total worldwide hidden capital was about 9.7 trillion dollars. According to deSoto "What they [the poor] did not get were the mechanisms that could have allowed them to fix the economic rights over their assets in representations protected by law.[1]" In his book he gives several charts detailing the complexity of obtaining such rights.[2]

This complexity barrier is not confined to Third World Economies. It was a problem in the United States[3] well into the nineteenth century. An inventor must surmount a similar barrier to get legal recognition of his property rights in a timely and inexpensive way. The barrier consists of the excessive rules and bureaucracy of the patent system,[4] the plethora of judicial precedents, the unpublished decisions, which cerate private law that helps sustain the two-tier system of patent law, and the need to prove the validity of a patent three times[5]. The current system is expensive, time-consuming, uncertain and unfair. Its cost in inventions that never came to market because they could not be collateralized or were not pursued due to the legal complexities and uncertainties must be huge, albeit hard to measure. But given the 9.7 trillion dollars in hidden capital deSoto uncovered, one would not be surprised if it reached into the hundreds of billions of dollars.

This two-tier system creates an unconscious bias that influences judicial decisions. IPC's Amicus brief IPC in *Zurko* provided empirical evidence that the courts had a large

[1] Page 466

[2] See, for example, page 192: Figure 6.3: The 728 bureaucratic steps required by the municipality of Lima to obtain legal title to a home that is in a validated housing settlement.

[3] See Chapter 5: The Missing Lessons of U.S. History.

[4] See for example, *The Long walk form the Gobi Desert to the River Styx* by Joseph Hotany, Intellectual Property Today, and January 2001.

[5] In the PTO, in the District Court and then in the Court of Appeals where it is reconsidered *de novo*.

bias against small entity in favor large companies. Of the 14 cases decided by Federal Circuit, the inventors lost 13.[6]

All this suggests that outsider inventors have much less success in raising investment funds, developing their inventions and marketing their inventions because of the difficulties the legal system imposes which hurts them much less than it does large companies.

[6] It is telling that one winner, Dr. Raymond Damadian, the inventor of Magnetic Resonance Imaging, had 8 years earlier lost an infringement suit on the same patent and on the same claims. In the interval between lawsuits he had been inducted into the National Inventors Hall of Fame and received the National Medal of Technology from President Reagan.

Appendix E: Table Of Insider/Outsider Legal History

This table shows how throughout history barriers have developed separating elite insiders from outsiders, which often led to the insiders exploiting the outsiders.

Insider Outsider Economics

Event (Actor)	Decision maker	Insider Beneficiaries	Outsider casualty	Ultimate loser	Barrier Mechanism
England (Parliament)	Parliament	Those purchasing monopolies	Mercantile Class	The public[1]	Exclusion
Turn of Century Trusts (Roosevelt)	Congress, T. Roosevelt	Robber Barons	Competitors	The public	Restraint of Trade
Industry Regulation (Stigler[2])	Regulatory agencies	Industry Insiders	Industry Outsiders	The public	Regulatory agency
Professional Societies (Stigler)	Professional Society	Accredited Professionals	Outsider Professionals	The public	Accreditation process
Capitalism in Third World Countries (deSoto[3])	Third World Legal Systems	Elite insiders	Poorer Classes	The public, nation	Excessive bureaucracy, complex legal system
Patents	Federal Circuit, Congress	Non-innovative Industry Insiders	Innovative Outsider Inventors	The public	Patent jurisprudence, Patent Prosecution

[1] The public is the ultimate loser. The outsiders' economic loss is greater than the insiders' economic gain.

[2] Stigler, George, *The Theory Of Economic Regulation*, Rand Journal of Economics, Spring 1971 pp 3-21

[3] deSoto, Hernando, The Mystery of Capital, BasicBooks, 2000

Appendix F: Letters Nominating People To The Patent Advisory Board

Mr. Nicholas Flagler
Office of the Commissioner
United States Patent and Trademark Office
Washington, DC 20231

April 28, 2000

Dear. Mr. Flagler:

I am writing you on behalf of Intellectual Property Creators to make several nominations to the Patent Advisory Committee

Intellectual Property Creators is a non-profit inventors public policy organization founded in 1995. Our directors include Inductees to the National Inventors Hall of Fame. Our interest is to see that small entity entrepreneurial inventors are protected by a strong and effective patent system. Our focus is in two primary areas:

- Educating Congress, the press, and the public about patent issues relating to inventors.

- We file Amicus briefs with the courts including one with the U.S. Supreme Court.

We have reviewed the qualifications specified in the Federal Register Notice (posted at www.uspto.gov/web/offices/com/sol/notices/pubadvcom.pdf). We assume that the main objective of the committee is to encourage innovation and its commercialization.

In this light, I wish to provide background information in several areas that should be helpful in selecting the members of the Patent Advisory Committee. This is largely a personal view, but it is based on my experience in these issues going back to 1991 when I provided comments for the Mosbacher Commission on Patent Reform. For information supporting what follows please see our website or ask me.

1.**Outsiders v. Insiders**. To understand how innovation, especially fundamental innovation, and the patent system work, one must understand the conflict between entrenched interests who have markets to protect, and inventors whose inventions threaten existing markets. It is a classic battle of outsiders versus insiders. Innovation is a hostile act as it threatens the status quo and those who benefit from it. This explains the fundamental differences between the U.S. patent system and the European and Japanese ones. The European patent system was developed so as to ensure it would create a minimal threat to entrenched interests, while the U.S. system was developed at a time when the entrenched interests (Tories), having lost the Revolutionary War, were out of power and those in power had few interests to protect, but a vast future to develop. And so U.S. patents were designed to be stronger and America became the source of much of the world's technical progress.

Many of the issues the Advisory Committee will consider will set the ground rules in the war between the well-represented entrenched interests of established technologies and companies and the poorly represented interests of future technologies entrepreneurial startups.

2.Large vs. Small company inventors. The conflict between entrenched interests and challengers is often perceived as a large vs. small issue. While much innovation comes from large companies, most innovation, especially fundamental innovation, comes from small entity inventors and small companies, as they are more willing to challenge established interests and mainstream wisdom, often though naivety. Big companies don't like innovation they cannot control as next quarter's results are going to be determined much more by how well they protect their existing markets than in introducing invention-- especially invention which disrupts their business models. Thus Advisory Committee members representing large companies are going to be more experienced in and concerned about protecting existing markets and business models than encouraging new ones.

3.Most of the combatants don't understand the battlefield. It is sad that in such an important area of public policy as innovation and patent policy, few participants understand how the battles are fought. Specifically:

a. It is rare that a corporate CEO understands and provides oversight on patent issues. They usually defer to his general counsel or chief patent counsel, who often make recommendations based on parochial interests.

b. Most inventors are naive about the issues because they don't experience the problems until they try to enforce their patents or get involved in litigation. This happens to relatively few inventors, and then only late in the life of an invention. Yet what happens in these conflicts determines the basis on which patents are respected and valued.

c. Most of the members of the patent bar are involved in writing patent applications and so are mainly interested in knowing what procedures to follow. Everyone seems to assume that someone else is minding the store.

4.Entrepreneurial inventors. Half of the fundamental inventions come from inventors who become entrepreneurs and start companies to pursue their inventions. Small entity inventors founded the Colossi of American industry--IBM, GE, Dow, and others. I suggest that Advisory Commission members will find it useful to understand the dynamics of such companies in their entrepreneurial birth rather than their dotage. Advisory Committee members should have expertise in how the patent system encourages or discourages entrepreneurial success. This is particularly important as small entity entrepreneurial inventors rarely have much money or a sophisticated understanding the patent system, yet these are those most in need of its protection.

5.The Inventor Constituency. Few people who invent see themselves as inventors, at least not until later in their careers. They do not see themselves as in the business of inventing. Rather they consider themselves as software developers, electrical engineers, medical researchers, automobile mechanics, or entrepreneurs. They see inventing as something they do to advance their visions, like accounting or sales. They see the patent application process as a bunch of annoying paperwork. For this reason, identifying experienced inventors is hard to do. Inventor groups throughout the country are usually experienced in the early stages of invention but are naive as to what it really takes to bring a product to market or enforce a patent. It is difficult to find people with relevant experience to provide mature advice on inventor issues.

6.The Invention Process. To be effective, the Advisory Committee must understand the invention process, from creating an idea to testing it, to patenting it, to starting a company based on it, or otherwise bringing it to commercial reality and finally to defending the invention against "infringers" once its value is proven in the marketplace. The

Advisory Committee needs expertise as to how Patent Office policies and litigation can encourage or discourage invention.

7.Lawyers vs. Inventors. The patent advisory Committee is, if history is a guide, in great danger of overly representing patent lawyers. The interests of lawyers are in ambiguity, complexity and advancing their own interests, rather than in clarity, simplicity, efficiency and equitable resolution of issues. They earn a living as lawyers and that affects their perspective. The result has been a jurisprudence that addresses the interests of lawyers more than inventors, good public policy, or even "infringers"

8.History of Advisory Committees. There were at least two earlier (temporary) Patent Advisory Committees: one was formed in 1966 and another in 1991. Both committees were populated almost entirely by big company representatives and lawyers and their recommendations led to many of today's problems.

a. The 1966 Committee under J. W. Birkenstock of IBM made several recommendations to Congress none of which were enacted into law. One of the recommendations was that computer software not be patentable. Their recommendation was quoted in the Gottschalk v. Benson Supreme Court decision, which led the interpretation, by the patent bar that software was not patentable. This position was IBM's internal policy, and J. W. Birkenstock who chaired the Commission was IBM's vice president in charge of Intellectual Property. As a result of this decision many inventions were not patented and without patent protection, product development entrepreneurial startups were discouraged. An erroneous view that software was not patentable subject matter developed, and continues to this day. As software patents were not being granted, the major source of prior art for patent examinations, prior patents, was not developed leading to the present Patent Office problems

in examining software related patents. All this could be attributed to the self-interest of one large corporation.

b. The 1992 Report of the Patent Reform commission appointed by Secretary of Commerce Mosbacher made several recommendations but Congress did not accept them. This commission vividly demonstrated a gross bias in favor of big companies. None of the 14 commission members was an inventor. Six of the 14 members represented "industry." Three represented the (patent and antitrust) bar. One represented Small Business, but I understand that he only showed up for one meeting. Two members ostensibly represented the public; both were lawyers: one was a former chief of patent litigation for A. T. & T. who represented A. T. & T. as a member of the Board of Directors of NCR. A former chief patent counsel for General Electric ostensibly represented academia. The other representative of academia, Ed MacCordy, was the only one to actually represent the interests of inventors and he refused to sign the report.

9.Committee members must be inventors. Fortunately, Congress seems to have learned from these fiascos. While there was much in the recently passed patent law, its plain words required that Patent Advisory Committee members represent large and small entity applicants. Applicants are inventors. Only they, and not their employers can apply for a patent. This derives from the Constitutionally explicit grant to inventors of the exclusive rights to their discoveries. (We would have preferred that the legislation allowed 2 or 3 members of the Advisory Committee to represent interests other than inventors.)

10.Corporate Inventors. Undoubtedly one of the issues considered by the Committee would be whether or not corporate inventors should receive royalties from their inventions, as do inventors in Germany and the Czech Republic. As such, expertise in this area should be

represented on the Committee. Employees are a great source of inventions in areas outside of their work, yet corporations often insist on ownership of the inventions but do not pursue them commercially. The committee will want to consider how such inventions can be effectively commercialized and this might be by giving rights to their inventors.

11. PTO operations. Obviously a major concern of the commission should be the efficient and effective operation of the Patent Office. Currently the Patent Office has numerous areas where improvements could be made. Inventors who have used the Patent Office have used its good and bad sides should be represented on the committee.

12.Effect of Zurko and the APA. As a result of the Supreme Court decision in Zurko, the procedures of the Patent Office are under the purview of the Administrative Procedures Act. As a result, the Advisory Committee will likely consider changes in Patent Office procedures and policy involving the APA. Moreover, the idea of using the APA instead of the courts as a mechanism to adjudicate patent issues may be an idea whose time has come. For example, should claim interpretation be a matter for the Patent Office or a specialty patent court to determine? Committee members who are knowledgeable about the APA would be useful. Not only is APA expertise rare in the patent bar, but the patent bar has actively resisted its use.

13.Enforcement of Patents-- The committee should consider the patent system as a whole and not just the Patent Office operations. As such the Advisory Committee will likely have to consider issues such as how effective the district courts are in enforcing patents, especially those held by small entity entrepreneurial inventors. Our research (see our Zurko Amicus Brief) shows that the district courts are

strongly biased against small entity inventors. (We have a study that showed that 13 of 14 inventors who litigated their patents against big companies lost.) We believe this is mainly due to the fact that the courts are not knowledgeable or experienced in either technology or patent law. Eliminating this bias should be a major objective the Advisory Committee. Should patent claim interpretation be decided by an administrative agency with special expertise in technology and patents (such as the PTO)? Should specialty patent courts determine it? Is there another solution? Or should small entity inventors be denied patents as they would in practice be unenforceable and good public policy dictates that such inventors not waste their efforts tilting at windmills.

14.Antitrust and Small entity inventors. There appear to be several cases of large companies colluding to defeat inventors' interests. The committee might want to consider laws that would discourage such collusion.

15.Nurturing inventions. Inventions involve the birth and nurturing of new ideas. As such it would appear that the legal environment must be a nurturing one, rather than a draconian one that is dangerous for an inventor's well being

Currently, the courts appear to be interpreting the patent laws, especially with regard to entrepreneurial inventors, in a draconian fashion.

This list is not meant to be exhaustive. For example, there are biotech and software issues the Advisory Board will want to consider. We are particularly concerned with assuring that the members of the Patent Advisory Committee bring a broad perspective to the issues it addresses.

I am sure that several resumes of distinguished lawyers and businessmen who have never invented anything will be presented for consideration as committee members. In considering which people to recommend, it might be useful to consider a conversation between then Vice President Lyndon Johnson and Sam Rayburn that, I believe, David Halberstam describes in *The Best and the Brightest*. Johnson rhapsodized to Rayburn about all the Harvard professors that Kennedy was bringing into his administration. After listening for a while, Rayburn told Johnson, "All the same, I wish that just one of them had run for dogcatcher." If the Advisory Committee is to be successful, I suggest it needs members who have personal experience with the crucial realities of the situations in which their recommendations will be implemented.

With these concerns in mind we nominate the following people, all of whom have consented to be nominated:

1. **Donald Banner** was Patent Commissioner under President Carter where his accomplishments including introducing the reexamination process that moved much of the process of deterring patent validity from the courts to the Patent Office. A fighter pilot in World War II, he was a corporate patent counsel for Borg Warner. After leaving the Patent Office, he became a principal in the law firm Banner, Birch, McKie and Beckett (now Banner and Witcoff). He was a founder and early president of the IPO. Unlike many of his colleagues, he opposed the recent patent law as being against the interests of inventors and the United States.

2. Dwight Bauman, Sc. D is Professor of Engineering Design at Carnegie Mellon. He holds several patents in automotive, aircraft, neural networks and other areas. He

founded the first innovation incubation center in the United States in 1970. In 1973 the National Science Foundation was asked by OMB to investigate this type of experimental innovation mechanism. As a result Dr. Bauman developed what has became the model for the SBIR programs. Dr. Bauman is being awarded an honorary Doctorate of Law by the University of North Dakota for his work in product liability reform and innovation centers. He has taught entrepreneurship, innovation, and product design at MIT and Carnegie Mellon for almost 40 years. He has been involved in helping formulate and pass legislation.

3. **Paul Crilly, Ph. D** is Associate Professor of Electrical and Computer Engineering at the University of Tennessee. As an inventor, he holds 3 patents; two as an employee of Hewlett Packard. He was Chief Science Advisor for Congressman Dana. Rohrabacher Chairman of Space Subcommittee in 1994-5, where his major focus was on patent legislation.

4. **Robert Fletcher** is President of Intellectual Property Insurance Services Corporation, which primarily focuses on insuring intellectual property, both from enforcement and defensive perspectives. Previously, he was employed in investment banking and in developing licensing and enforcement programs for intellectual property. In this capacity, he funded start-up development companies through a multiplicity of financial vehicles and he managed patent litigation. He is a patent attorney with more than twenty-five years of experience in all phases of patent practice including serving in the patent departments of Standard Oil (Indiana) and General Electric. He holds three technical utility patents, two of which were used in the early Apollo missions. He also pioneered patent enforcement insurance, not just as a business instrument, but also as an

entrepreneurial startup. The unique combination of these experiences affords him the ability to voice the concerns of 1) Large corporations, 2) Investment banks, 3) the Insurance industry, 4) Entrepreneurs, and 5) Individual patentees.

5. Richard Grant is the inventor of a film composer's time processor for which he won an Emmy in 1985 and an Academy Award for scientific achievement (1987). His company, Auricle, markets his invention to the film industry. He sued a Fortune 500 company for infringement and received a successful settlement just prior to trial. He is currently involved in further litigation on this patent. Richard Grant holds a B.A. in Philosophy (UCLA 1967) and a Juris Doctorate (Loyola University 1972). He retired from full-time practice as a litigator in early '83 in order to pursue a more creatively rewarding career in software development and design. Mr. Grant is called upon to adjudicate computer software related disputes brought before the American Arbitration Association.

6. Jack Miller is president of Design Technology Corporation and has 115 issued patents of which about 50 are in lighting, optics and fiber optics. He is president and founder of Nouvir Research, which develops display lighting, much of it used by major museums. Earlier he was Supervisor of the Guidance & Control Division of Jet Propulsion Labs. He has served as an expert in 24 patent cases and 8 product liability cases. He wrote and prosecuted to issue over 100 of his patents. In 1997 he authored a monograph entitled "A Proposal to Modify the United States Patent and Trademark System."

7. Arnold Newman Ph. D. is an inventor on 15 patents, and an engineer entrepreneur who has started 3 companies since leaving Johns Hopkins University Applied

Physics Laboratory in 1986. He is president of Synexus Corp. a technology assessment, transfer and development company offering licensing, and marketing and patent research services. He testified before Congress on prior user rights in 1994.

8. Neal Orkin is a professor of Labor law at Drexel and a professional arbitrator. As an Electrical Engineer he has been very interested in the rights of inventors under labor law. He has written on how the U.S. law could be changed so that corporate inventors can get the same rights to royalties for their inventions, as do inventors in Germany and Sweden. Of particular interest is his experience with the Administrative Procedures Act to which the National Labor Relations Board has long been subject and which the PTO is now subject as a result of *Zurko*. He has recently completed a critical study of the Czech law of employee inventions in which he proposed changes in the structure of administrative review similar to that in Zurko.

9. David Pressman is an electrical engineer, a former patent examiner and patent lawyer with 40 years experience mostly in industry. He holds 2 patents. He is now in private practice with a clientele of small entity and small entity inventors. He is the author of the highly regarded *Patent it Yourself* (Nolo Press) that is far and away the leader in self-help patent law books. He was the attorney of record on the IPC brief to the U.S. Supreme Court in *Zurko*.

10. Martin Reiffin has 12 patents, 4 pending applications, and 22 licensees. He has earned his living for the last 20 years as an inventor. He is currently involved in patent litigation against Microsoft to enforce one of his patents. At IBM, he was involved in high profile patent and patent interference litigation. While at IBM, Mr. Reiffin was

one of four attorneys in a committee to advise IBM's J. W. Birkenstock on the patentability of software. (Mr. Birkenstock overruled the advice of Mr. Reiffin and that committee in making his decision that IBM's policy was to oppose the patentability of software.)

11. Robert Scott Root-Bernstein, Ph. D. is Professor of Physiology at the University of Michigan. He holds 1 patent and has 4 patents pending. A MacArthur fellow, and scholar of the invention process, he wrote *Discovering: Inventing and Solving Problems on the Frontiers of Scientific Knowledge*. He has experience with both corporations and universities involving innovation policy. Currently he is working on alternative approaches to curing AIDs. He is particularly interested inability of universities to effectively commercialize their patented research results.

12. Autumn Stanley is the author of *Mothers and Daughters of Invention*, a 600-page history of women inventors throughout history. She would bring a valuable perspective to the Advisory Committee as she has documented the work of an important class of inventors and so is intimately familiar with the invention process from conception to recognition. She personally knows over 100 woman inventors.

13. **Peter Theis** is an inventor with 23 U.S patents. He founded Conversational Voice Technologies to develop and market his inventions including interactive voice response technology (voice mail being an early application). He has been in litigation with the telephone companies and their major suppliers for eight years since they sued him after he attempted to license his patent portfolio to that industry. . He has real world experience with jury trials regarding patents, bringing patent matters to the CAFC and the Supreme Court,

and malpractice and undisclosed conflicting attorney-client relationship with adverse parties, including one of the litigating phone companies. Mr. Theis is an engineer, has a Masters Degree in Business Administration and is a non-practicing lawyer.

I will be happy to provide you with any additional information on any of the above you might wish.

Sincerely yours,

Paul Heckel, President

Enc: Zurko brief
Resumes of all Nominees
Discoveries (Separately shipped)
Mothers and Daughters of Invention (Separately shipped)

Cc: Secretary of Commerce Daley
Commissioner of Patents Dickinson
IPC website

[1] Two examples of a nurturing legal environment are child labor laws that prevent children from freely contracting for their services and the First Amendment, which together with disallowing prior restraint encourages the weak to express their opinions in the face of powerful interests.

Mr. Nicholas Flagler
Office of the Commissioner
United States Patent and Trademark Office
Washington, DC 20231

June 15, 2000

Subject Nomination of Professor William D. Nordhaus

Dear. Mr. Flagler

I realize that it is past the formal time for nominations tot hat Patent Advisory Committee. However, I wish to bring to your attention William Nordhaus as a potential member. In brief William D. Nordhaus is a Professor of Economics at Yale and is a member of the Brookings Panel on Economic Activity, He was a Member of the U.S. President's Council of Economic Advisers, and a Vice President for Finance at Yale, His many books include Invention, Growth and Welfare and (joint with Paul Samuelson) the classic textbook, Economics. Much of his work has been in the economics of patents and technological change.

Dr. Franco Modigliani, the Nobel Laureate in Economics who organized the letter against passage of the patent bill, suggested him. I think it is highly desirable that an economist be on the committee and Dr. Nordhaus seems to be exceptionally relevant [sic] qualified.

I have talked to Dr. Nordhaus and he is quite interested in serving although he Doctrine Of Equivalents has some concerns about the time it might take. You can find more information on Professor Nordhaus at ww.econ.yale.edu/~nordhaus/homepage/homepage.htm

I would hope it would be possible to consider this belated nomination.

Sincerely yours,

Paul Heckel

(18)

Supreme Court, U.S.
FILED
AUG 31 2001
OFFICE OF THE CLERK

No. 00-1543

In The

Supreme Court of the United States

FESTO CORPORATION,

Petitioner,

v.

SHOKETSU KINZOKU KOGYO KABUSHIKI CO., LTD.,
a/k/a SMC CORPORATION and
SMC PNEUMATICS, INC.,

Respondents.

On Writ Of Certiorari
To The United States Court Of Appeals
For The Federal Circuit

JOINT APPENDIX
VOLUME I, PAGES I-1 TO 1-153

ROBERT H. BORK
Counsel of Record
Suite 1000
1150 17th Street, N.W.
Washington, D.C. 20036
(202) 862-5851

Counsel for Petitioner

ARTHUR I. NEUSTADT
Counsel of Record
CHARLES L. GHOLZ
ROBERT T. POUS
OBLON, SPIVAK, MCCLELLAND,
MAIER & NEUSTADT, P.C.
1755 Jefferson Davis Highway
Arlington, Virginia 22202
(703) 413-3000

Counsel for Respondents

[Additional Counsel Listed On Inside Cover]

Petition For Certiorari Filed: April 9, 2001
Certiorari Granted: June 18, 2001

157 P

CHARLES R. HOFFMANN
GERALD T. BODNER
GLENN T. HENNEBERGER
ANTHONY E. BENNETT
HOFFMANN & BARON, LLP
6900 Jericho Turnpike
Syosset, New York 11791
(516) 822-3550

ANDREW L. FREY
DONALD M. FALK
ROBERT L. BRONSTON
MAYER, BROWN & PLATT
1909 K Street, N.W.
Washington, D.C. 20006
(202) 263-3000

Counsel for Petitioner

JAMES B. LAMPERT
HALE AND DORR
60 State Street
Boston, Massachusetts
02109
(617) 526-6000

Counsel for Respondents

TABLE OF CONTENTS

Page

VOLUME I

Relevant Docket Entries.....I-1

Excerpt of Report of the Special Master Herbert F. Schwartz, Esq. Pursuant to Rule 53(e)(1) F.R.Civ.P.....I-40

Excerpt of Festo Corporation's Objections to Report of Special Master Herbert F. Schwartz, Esq. Pursuant to Rule 53(e)(3) F.R.Civ.P.....I-53

Excerpt of Plaintiff Festo Corporation's Pretrial Memorandum Under L.R. 16.5.....I-57

Excerpt of Defendant's Exhibit 105, Plaintiff Festo Corporation's Trial Memorandum.....I-61

Excerpt of Plaintiff Festo Corporation's Trial Brief (6/27/94).....I-64

Order of Hon. Judge Saris re: Pretrial Motions, July 11, 1994.....I-66

Excerpt of Defendant SMC's Exhibit 64, Festo Document.....I-81

Defendant SMC's Exhibit 66 Festo Document.....I-84

Transcripts of Jury Trial before Hon. Patti B. Saris:

Day 2 pp. 19 to 20; 90.....I-90

Day 3 pp. 67 to 74; 90 to 95; 110 to 111; 115 to 118.....I-94

Day 4 pp. 20; 57 to 59; 61 to 62; 100 to 119.....I-115

Day 6 pp. 52 to 54; 69 to 71.....I-139

Day 7 pp. 76 to 77; and 87 to 88.....I-145

Day 8 pp. 104; 119 to 120.....I-150

TABLE OF CONTENTS – Continued

Page

VOLUME II

U.S. Patent No. 4,354,125 to Stoll (Plf. Ex. 15)..... II-1

File history of U.S. Patent No. 4,354,125 to Stoll (Plf. Ex. 14), including cited references..... II-8

Translation of German Patent Publication DE-OS 27 37 924 ..... II-109

U.S. Patent No. 3,779,401 to Carroll (Plf. Ex. 17).... II-121

U.S. Reexamination Certificate for B1 3,779,401 to Carroll (Plf. Ex. 19)..... II-129

File History of U.S. Reexam to Carroll Patent (Plf. Ex. 18), including cited references and Translation of German Petty Patent 1982379.... II-133

RELEVANT DOCKET ENTRIES

United States District Court

Date	N.R.	PROCEEDINGS
Aug 4	1	Complaint, FILED, S/I CFI LR10 18A
Sep 26	3	D's ANSWER and COUNTER-CLAIMS, FILED. cs
Sep 30	5	D's Amended ANSWER and counter claims, FILED. cs
Oct 19	6	P's demand for trial by jury, FILED. cs
Nov 8	10	P Festo Corporation's Reply to D's Counterclaims, FILED. cs
1989		
Oct 2	39	*MAZZONE, D.J.*, Memorandum and Order, entered. Since Festo KG did not take any action itself to establish minimum contacts in Massachusetts and none of Festo US's activities can be deemed as performed for Festo KG, I find that the criteria of the Massachusetts long-arm statute are not satisfied. Accordingly, the motion of Festo KG to dismiss is allowed. cc/cl
1990		
Oct 24	46	Amended Complaint, Filed.
Nov 26	50	Pltf Reply to Dfts Cntrol in Dft's Response to Pltf's Amended Complaint filed cs
Nov	51	Pltf Demand a Trial by Jury on all issues, filed c/s.

U.S. District Court – Massachusetts (Boston)

1/31/92	95	Trial briefs by Festo Corp. (mcm) [1:88cv1814]
2/21/92	99	Trial briefs by Smc Pneumatics, Inc. filed cs. (dlw) [1:88cv1814]
2/26/92	104	Motion by Shoketsu Kinzoku Kog, Smc Pneumatics, Inc. for summary judgment mtn for stoll patent invalidity filed cs. (mcm) [1:88cv1814]
2/28/92	–	Status conference held Re; schedule for trial. D's reply trial Doc. filed in court under seal. Based on its review of the [trial] documents, the court has concluded that this case is inappropriate for trial to jury. The parties have ruled out settlement. Accordingly, the parties may elect on[e] of two options: 1. agree to a Special Master, or submit 3 names each and the court will select; 2. Show cause why a rule 706 expert should not be appointed. The parties have 20 days to report to the clerk their decision. (sad) [Entry date 04/08/92] [1:88cv1814]
2/28/92	138	Judge A. D. Mazzone. Clerk's Notes:, Trial is hereby conce[a]led. Ruling on all pending motions deferred pending appointment of special Master or Rule 706 Expert. . . . terminated deadlines (sad) [Entry date 04/08/92] [1:88cv1814]
3/20/92	117	Motion by Shoketu Kinzoku Kog, Smc Pneumatics, Inc. for summary judgment of non-infringement of the stoll patent

		filed cs. (mcm) [Entry date 03/23/92] [1:88cv1814]
3/20/92	118	Memorandum by Shoketsu Kinzoku Kog, Smc Pneumatics, Inc. in support of [117-1] motion for summary judgment of non-infringement of the stoll patent (mcm) [Entry date 03/23/92] [1:88cv1814]
3/20/92	119	Statement of Facts by Shoketsu Kinzoku Kog, Smc Pneumatics, Inc. Re: [117-1] motion for summary judgment of non-infringement of the stoll patent (mcm) [Entry date 03/23/92] [1:88cv1814]
3/24/92	122	Motion by Shoketsu Kinzoku Kog, Smc Pneumatics, Inc. for summary judgment of non-infring of the stoll and carroll patents by the one seal SMC Rodless Cylinder filed cs. (req for oral argument) (mcm) [1:88cv1814]
5/1/92	144	EMERGENCY/Motion by Festo Corp. to strike [122-1] motion for summary judgment of non-infring of the stoll and carroll patents by the one seal SMC Rodless Cylinder, [117-1] motion for summary judgmnt of non-infringement of the stoll patent, [104-1] motion for summary judgment mtn for stoll patent invalidity filed cs. REQ FOR ORAL ARGUMENT (mcm) [Entry date 05/06/92] [1:88cv1814]
5/7/92	149	Response by Festo Corp. in opposition to [117-1] motion for summary judgment of non-infringement of the stoll patent (mcm) [Entry date 05/14/92] [1:88cv1814]

5/21/92	166	Judge A. D. Mazzone. Order referring case to Herbert F. Schwartz as special master for the purpose of considering all claims presented in this case by the parties and for such other matter as may be referred to the Master by the Court such as discovery disputes. (mcm) [Entry date 06/02/92] [1:88cv1814]
5/21/92	166	Judge A. D. Mazzone. Order of reference entered for Alternative Dispute Resolution. Referred to: Herbert Schwartz for: alternative dispute (mcm) [Entry date 01/24/95] [1:88cv1814]
7/8/92	170	Ltr from Special Master H. Schwartz re: confirming ctrm 1110 for hearings on the following dates: September 14-18, 1992, September 21-15, 1992 and October 19-23, 1992. Arrangements for a court reporter will be made by Mr. Hoffman and Mr. Neustadt. (mcm) [1:88cv1814]
8/13/92	172	Order of Special Master Herbert F. Schwartz Entered (sad) [Entry date 08/24/92] [1:88cv1814]
4/27/93	176	Report of the Special Master Herbert F. Schwartz, Esq., Pursuant To Rule 53(e)(1) F.R.Civ.P., filed. (see file dkt #176 for further details) (mcm) [1:88cv1814]
5/11/93	178	Motion by Shoketsu Kinzoku Kog, Smc Pneumatics, Inc. for entry of summary judgment and direct verdict of Non-Infringement of the stoll patent FILED c.s. (jmr) [1:88cv1814]

5/18/93	184	Judge A. D. Mazzone. Order, Objections or motions with supporting memoranda for confirmation of Special Master's Report shall be filed and served by 6/9/93. Entered cc/cl (sad) [Entry date 06/08/93] [1:88cv1814]
6/9/93	185	Motion by Festo Corp. to vacate or modify those portions of the Report of the SM in accord w/pltf objection filed and to confirm the remaining portions of the report filed cs. (mcm) [1:88cv1814]
6/9/93	186	Response by Festo Corp. in opposition to the Report of the Special Master, pursuant to Rule 53(e)(3), FR Civ P, filed cs. (mcm) [1:88cv1814]
6/9/93	187	Motion by Festo Corp. for summary judgment of validity and a directed verdict of the reexamined Carroll Patent filed cs. (mcm) [1:88cv1814]
6/9/93	191	Motion by Festo Corp. for summary judgment and or a directed verdict of infringement of the reexamined Carroll Patent filed cs. (mcm) [1:88cv1814]
6/9/93	194	Motion by Festo Corp. for summary judgment and a directed verdict of VALIDITY OF THE STOLL PATENT filed cs. (mcm) [1:88cv1814]
6/9/93	198	Motion by Festo Corp. for summary judgment and directed verdict of INFRINGEMENT OF THE STOLL PATENT filed cs. (mcm) [1:88cv1814]
6/9/93	202	Reply by Smc Pneumatics, Inc. to response to the May 18, 1993 ORDER

CONCERNING THE SPECIAL MASTER'S REPORT, filed cs. (mcm) [1:88cv1814]

6/30/93 205 Response by Smc Pneumatics, Inc. in opposition to [198-1] (4) motions for summary judgment and directed verdict of INFRINGEMENT OF THE STOLL PATENT (mcm) [Entry date 07/07/93] [1:88cv1814]

1/25/94 – Case reassigned from Judge Mazzone to Judge Patti B. Saris upon appointment to the bench. Notice (1/18/94) sent to counsel. (mcm) [1:88cv1814]

2/3/94 209 Judge Patti B. Saris. Clerk's Notes: hearing on pending motions for SJ. Parties to consider trial by jury on liability, and to court on damages. Special Masters report will be redacted and submitted to the jury. Pltfs physics expert will be allowed; dft can depose physics expert. NOTED that Miamoto patent was not addressed in SM trial, but is the substance of SMC's counterclaim. Trial will be limited to one week per side. FPTC set for 5/6/94. Jury trial set for 5/16/94, 10-15 days. Settlement cnf held off the record. Parties to report to clerk by 2/11/94 re: status of settlement and if they want settlement cnf w/principals scheduled w/Sr. Judge Mazzone. Further briefing order to issue. (mcm) [Entry date 02/25/94] [1:88cv1814]

2/3/94 – Judge Patti B. Saris. Endorsed Order denying [178-1] motion for entry of summary judgment and direct verdict of Non-Infringement of the stoll patent

(mcm) [Entry date 02/25/94] [1:88cv1814]

2/3/94 – Judge Patti B. Saris. Endorsed Order denying [194-1] motion for summary judgment and a directed verdict of VALIDITY OF THE STOLL PATENT (mcm) [Entry date 02/25/94] [1:88cv1814]

2/3/94 – Judge Patti B. Saris. Endorsed Order denying [198-1] motion for summary judgment and directed verdict of INFRINGEMENT OF THE STOLL PATENT (mcm) [Entry date 02/25/94] [1:88cv1814]

2/18/94 208 Judge Patti B. Saris. Procedural Order, set settlement conference before Judge A. D. Mazzone for 10:00 3/16/94, set pretrial conference for 2:00 5/6/94 before Judge Patti B. Saris. For the reasons stated in court on 2/3/94, the parties mtns for s.j dkt #104,117,122,178,194 and 198 are DENIED. The parties mtns for s/j dkt # 122 and 187 are DENIED. Ruling is DEFERRED on the pltfs mtn for mtn for s/j and directed verdict of infringement on the reexamined Carroll patent dkt #191 pending receipt of supp briefing. by 2/25/94, the parties shall file supp memo on the following issues: new case on doctrine of equivalents (Carroll patent); literal infringement (Carroll patent); any other issues raised. Any responses to the above submissions shall be filed no later than March 4, 1994. (see file dkt #208 for further

details) (mcm) [Entry date 02/25/94] [1:88cv1814]

2/25/94 210 Pltf Festo Corp., Supplemental Memorandum Re: New case law on the Doctrine of Equivalents with respect to the Carroll Patent, filed cs. (mcm) [Entry date 02/28/94] [1:88cv1814]

2/25/94 211 SMC'S Memo concerning the absence of literal infringement of the Carroll Patent, filed. (mcm) [Entry date 02/28/94] [1:88cv1814]

2/25/94 212 Motion by Smc Pneumatics, Inc. for consideration of Special Master's recommendation filed cs. (mcm) [Entry date 02/28/94] [1:88cv1814]

3/4/94 213 Response by Festo Corp. to [212-1] motion for consideration of Special Master's recommendation, FILED. (c/s) (cmg) [Entry date 03/14/94] [1:88cv1814]

3/4/94 214 Response by Festo Corp. to SMC's Memorandum Concerning the Absence of Literal Infringement of the Carroll Patent, FILED. (c/s) (cmg) [Entry date 03/14/94] [1:88cv1814]

3/4/94 216 Response of SMC's to Festo's supplemental memo regarding new case law on the doctrine of equivalents, filed cs. (mcm) [Entry date 03/16/94] [1:88cv1814]

3/14/94 215 Transcript of proceedings for motion hearing held on 2/4/94 before Judge: Saris (mcm) [1:88cv1814]

3/30/94 – DFTS SUPPLEMENTAL Memorandum by Smc Pneumatics, Inc. in support of [178-1] motion for entry of summary judgment and direct verdict of Non-Infringement of the stoll patent (mcm) [Entry date 04/04/94] [1:88cv1814]

5/3/94 220 Pretrial memorandum by Festo Corp., filed. (mcm) [Entry date 05/04/94] [1:88cv1814]

5/10/94 222 Judge Patti B. Saris. Clerk's Notes: re: FINAL PRETRIAL CONFERENCE HELD, Trial date continued . . . set Jury trial for 5/31/94 Plaintiff h/f/updated trial document; dft will stand on previously-filed trial document. No motions in limine f. Trial to proceed w/o bifurcation. Counsel anticipate 10-15 trial days, incl. damages and break for liability deliberations (plaintiff's case infringement; dft's case invalaidity) Order of presentation: plaintiff's case first, dft's second. Counterclaim on Miamoto patent is waived except for attys. fees issue. Jury to decide willfulness; Court to decide attys fees. Submission of MASTER'S REPORT (issue briefed earlier by pltf): Counsel w/h/t/stip to fact findings in SM's report: redact rest. SM REPORT t/b/given to jury to read, but not keep. Witnesses w/n/b permitted to comment on SM REPORT. TEN JURORS t/b/empaneled; all will deliberate. FIVE PEREMPTORY CHALLENGES PER SIDE. Local counsel need not always be present. Motions

		in limine, propsed jury interrogs., proposed voir dire, jury instructions t/b/f/by 5/23/94 . . . Both sides to supp. experts by 5/31/94. Parties anticipate 10-15 days of trial (1 for opening/closing statements, 4 for pltf's liability case, 4 for dft's, 2 days per side for dmgs, plus break for deliberations on liability phase). Court will hold parties to this schedule. (tmc) [Entry date 05/18/94] [Edit date 06/22/94] [1:88cv1814]
6/22/94	261	Response by Festo Corp. in opposition to Special Master Report of May 21, 1993, (DOCUMENT FILED UNDER SEAL) filed. (scj) [Entry date 09/14/94] [Edit date 09/14/94] [1:88cv1814]
6/22/94	262	Reply by Festo Corp. to response to the May 18, 1993 Order concerning the Special Master's Report (DOCUMENT FILED UNDER SEAL), filed. (scj) [Entry date 09/14/94] [1:88cv1814]
6/24/94	224	Trial brief by Smc Pneumatics, Inc., filed. (scj) [Entry date 06/27/94] [1:88cv1814]
6/24/94	226	Jury instructions filed. (scj) [Entry date 06/27/94] [1:88cv1814]
6/27/94	230	Trial brief by Festo Corp., filed. (scj) [Entry date 06/28/94] [1:88cv1814]
6/28/94	231	SMC's further comment and objection concerning the Special Master's Report (scj) [Entry date 06/29/94] [1:88cv1814]
6/29/94	–	Pre-trial conference held. (scj) [Entry date 07/01/94] [1:88cv1814]

6/29/94	236	Judge Patti B. Saris. Clerk's Notes: re: Final Pretrial Conference [229-1] motion in limine to exclude testimony and evidence of Defendants SMC Corporation and SMC Pneumatics, Inc. taken under advisement Court Reporter: Cloonan . . . Issues for trial . . . 1) Carroll patent (validity) 2) Stoll patent (validity) 3) Infringemenet on Carroll patent granted to P by way of ST, opinion to issue, SJ opinion to issue. SJ to dfts on Bolt issued. For purposes of trial, both dfts. w/b/ collectively referred as SMC. Proposed voir dire verdict form covered. Jury empanelment: 10 jurors, 5 peremtories per side. to dft on Bolt Issue. SJ (scj) [Entry date 07/01/94] [1:88cv1814]
7/5/94	–	Jury trial held. Day One (Empanelment) opening statements given; adjourned at 1:15pm until 7/6/94; 9:00AM . . . (sad) [Entry date 08/11/94] [1:88cv1814]
7/6/94	–	Jury trial held. Day Two: hearing held RE:submission of Special Master's report to jury. adjourned until 7/7/94; 9:00AM. . . . (sad) [Entry date 08/11/94] [1:88cv1814]
7/7/94	–	Jury trial held. Day Three; lobby conference. adjourned until 7/8/94; at 9:00Am. (sad) [Entry date 08/11/94] [1:88cv1814]
7/8/94	–	Jury trial held. Day Four . . . cross exam continued redirect, no re cross. adjourned to 7/11/94 9:00Am. . . . (sad) [Entry date 08/11/94] [1:88cv1814]

7/11/94	242	Judge Patti B. Saris. Order entered granting in part, denying in part [122-1] motion for summary judgment of non-infring of the stoll and carroll patents by the one seal SMC Rodless Cylinder granting as to the Carroll patent and denying as to the Stoll patent, granting [187-1] motion for summary judgment of validity and a directed verdict of the reexamined Carroll Patent, granting [191-1] motion for summary judgment and or a directed verdict of infringement of the reexamined Carroll Patent, denying [104-1] motion for summary judgment mtn for stoll patent invalidity, denying [117-1] motion for summary judgment of non-infringement of the stoll patent. cc/cl (scj) [Entry date 07/13/94] [1:88cv1814]
7/11/94	–	Jury trial held. Day Five; adjourned to 7/12/94 at 9:00AM. . . . (sad) [Entry date 08/11/94] [1:88cv1814]
7/12/94	–	Jury trial held. Day Six; defendants move for directed verdict; arguments on defendant's motion for directed verdict/judgment as a matter of law. Motion Denied for reasons stated in court. adjourned until 9:00AM on 7/13/94. . . . (sad) [Entry date 08/11/94] [1:88cv1814]
7/13/94	243	SMC's objections to propsed special verdict form (scj) [Entry date 07/14/94] [1:88cv1814]
7/13/94	244	SMC's objections to proposed jury instructions (scj) [Entry date 07/14/94] [1:88cv1814]

7/13/94	–	Jury trial held. Day Seven. . . . plaintiff's rebuttal case..adjourned to 7/14/94 at 9:00Am . . . (sad) [Entry date 08/11/94] [1:88cv1814]
7/14/94	245	SMC's Objections to Revised Jury Instruction (scj) [Entry date 07/18/94] [1:88cv1814]
7/14/94	246	Special Verdict Form as answered by the Jury (scj) [Entry date 07/18/94] [1:88cv1814]
7/14/94	–	Jury trial held. Day Eight . . . Evidence closed . . . closing arguments; jury charge. . . . 4:00PM verdict returned; motions for directed verdict; both motions Denied. . . . (sad) [Entry date 08/11/94] [1:88cv1814]
7/15/94	–	Jury trial held. Day nine. . . . Conference with counsel re-damages, no chance of settlement. defendant will move for mistrial based on brief deliberations . . . (sad) [Entry date 08/11/94] [1:88cv1814]
7/18/94	–	Jury trial held. Day 10 . . . re; damages. . . . (sad) [Entry date 08/11/94] [1:88cv1814]
7/18/94	–	Status conference held. plaintiff advises it will not pursue willful infringement issue. defendant moves for mistrial based on evidence and short deliberations on liability phase. DENIED . . . Juror injured in slip and fall on [stairs]. recessed until 10:20am . . . opening statements on damages phase. adjourned until 7/19/94. . . . (sad) [Entry date 08/25/94] [1:88cv1814]

7/18/94	252	Judge Patti B. Saris. Clerk's Notes: re: status conference Court Reporter: Cloonan (sad) [Entry date 08/25/94] [1:88cv1814]
7/19/94	–	Jury trial held. Day 11. . . . defendant opening statement. . . . court adjourned at 1:00PM jury excused. . . . (sad) [Entry date 08/11/94] [1:88cv1814]
7/20/94	248	SMC objections to proposed Speecial verdict form and damage jury instructions filed (sad) [Entry date 08/02/94] [1:88cv1814]
7/20/94	–	Jury trial held. Day 11 . . . jury excused; charge conference. . . . (sad) [Entry date 08/11/94] [1:88cv1814]
7/21/94	–	Jury trial held. Day twelve; defendants' closing arguments . . . plaintiffs' closing argument..charged. . . . delebration resume . . . questions to be filed. . . . 2:40pm verdict reached and returned . . . jury dismissed. . . . plaintiff's to file motion for permant injunction. proposed judgment due by 8/19/94 . . . (sad) [Entry date 08/11/94] [1:88cv1814]
7/26/94	247	Judge Patti B. Saris. Post-Trial Memorandum, ENTERED, cc/cl. (ktb) [Entry date 07/27/94] [1:88cv1814]
9/8/94	253	Motion by Smc Pneumatics, Inc. for judgment on the pleadings with respect to the Stoll Patent Non-Infrigement ("sleeve made of a magnetizable material"), filed. (scj) [Entry date 09/09/94] [1:88cv1814]

9/8/94	254	Motion by Smc Pneumatics, Inc. for judgment on the pleadings with respect to the Stoll Patent Non-Infringement ("Two seal-one seal"), filed. (scj) [Entry date 09/09/94] [1:88cv1814]
9/8/94	255	Motion by Smc Pneumatics, Inc. for judgment on the pleadings with respect to the Stoll Patent Invalidity ("Best mode and obviousness") and Carroll Patent Invalidity (Obviousness), filed. (scj) [Entry date 09/09/94] [1:88cv1814]
9/8/94	256	Motion by Smc Pneumatics, Inc. to alter judgment on th[e] grounds that there was no substantial evidence to support the jury's 100% lost profit damages of $4,739,183.00, filed. (scj) [Entry date 09/09/94] [1:88cv1814]
9/8/94	257	Motion by Smc Pneumatics, Inc. for new trial under the Alternative Rule 59, filed. (scj) [Entry date 09/09/94] [1:88cv1814]
9/8/94	258	SMC's Brief concerning a stay pending appeal of any injunction. filed (scj) [Entry date 09/09/94] [1:88cv1814]
9/8/94	259	Response by Smc Pneumatics, Inc. in opposition to prejudgement interest in the amount of $416,727.00, filed. (scj) [Entry date 09/09/94] [1:88cv1814]
9/16/94	263	Judge Patti B. Saris. Notice of Hearing/ conference: set for October 24, 1994 at 3:00. (scj) [1:88cv1814]
9/30/94	–	Terminated document mooting [113-1] motion in limine to exclude testimony and evidence of dfts SMC Copr & SMC

Pneumatice & cntrclm pltf SMC Corpo mooting [115-1] motion to ORDER admitted pltfs admission request no 1-17 denying [144-1] motion to strike [122-1] motion for summery judgment of non-infring of the stoll and carroll patents by the one seal SMC Rodless Cylinder, [117-1] motion for summary judgment of non-infringement of the stoll patent, [104-1] motion for summary judgment mtn for stoll patent invalidity mooting [148-1] motion to stay all mtns and rsps pending denying [185-1] motion to vacate or modify those portions of the Report of the SM in accord w/pltf objection filed and to confirm the remaining portions of the report mooting [212-1] motion for consideration of Special Master's recommendation mooting [229-1] motion in limine to exclude testimony and evidence of Defendants SMC Corporation and SMC Pneumatics, Inc. These motions are moot; see trial transcript and opinion dated 07/26/94. Requested by dw. (dlw) [Entry date 10/17/94] [1:88cv1814]

10/13/94 266 Memorandum by Festo Corp. in opposition to [255-1] motion for judgment on the pleadings with respect to the Stoll Patent Invalidity ("Best mode and obviousness") and Carroll Patent Invalidity (Obviousness), filed. (scj) [Entry date 10/14/94] [1:88cv1814]

10/14/94 272 Memorandum by Festo Corp. in opposition to [253-1] motion for judgment on

the pleadings with respect to the Stoll Patent Non-Infringement ("sleeve made of a magnetizable material"), filed. (scj) [Entry date 10/31/94] [1:88cv1814]

10/14/94 273 Memorandum by Festo Corp. in opposition to [257-1] motion for new trial under the Alternative Rule 59, filed. (scj) [Entry date 10/31/94] [1:88cv1814]

10/14/94 274 Memorandum by Festo Corp. in opposition to SMC's Brief in Support of its objection to prejudgmenet interest, filed. (scj) [Entry date 10/31/94] [1:88cv1814]

10/14/94 275 Memorandum by Festo Corp. in opposition to [257-1] motion for new trial under the Alternative Rule 59, filed. (scj) [Entry date 10/31/94] [1:88cv1814]

10/14/94 276 Memorandum by Festo Corp. in opposition to [258-1] remark, SMC's Brief concerning a stay pending appeal of any injunction filed. (scj) [Entry date 10/31/94] [1:88cv1814]

10/14/94 277 Memorandum by Festo Corp. in opposition to [254-1] motion for judgment on the pleadings with respect to the Stoll Patent Non-Infringement ("Two seal-one seal"), filed. (scj) [Entry date 10/31/94] [1:88cv1814]

10/20/94 267 Reply by Smc Pneumatics, Inc. to response to [253-1] motion for judgment on the pleadings with respect to the Stoll Patent Non-Infringement ("sleeve made of a magnetizable material"), filed. (scj) [Entry date 10/24/94] [1:88cv1814]

10/21/94 268 Reply by Smc Pneumatics, Inc. to response to [257-1] motion for new trial under the Alternative Rule 59, filed. (scj) [Entry date 10/24/94] [1:18cv1814]

10/21/94 269 Reply by Smc Pneumatics, Inc. to response to [255-1] motion for judgment on the pleadings with respect to the Stoll Patent Invalidity ("Best mode and obviousness") and Carroll Patent Invalidity (Obviousness), filed. (scj) [Entry date 10/24/94] [1:88cv1814]

10/21/94 270 Reply by Smc Pneumatics, Inc. to Festo's response to SMC's Brief in support of its Objection to prejudgement interest, filed. (scj) [Entry date 10/24/94] [1:88cv1814]

10/21/94 271 Reply by Smc Pneumatics, Inc. to Festo's response to SMC's Brief concerning a stay pending appeal of any injunction, filed. (scj) [Entry date 10/24/94] [1:88cv1814]

10/21/94 280 Reply by Smc Pneumatics, Inc. to response to [254-1] motion for judgment on the pleadings with respect to the Stoll Patent Non-Infringement ("Two seal-one seal"), filed. (scj) [Entry date 10/31/94] [1:88cv1814]

10/21/94 281 Reply by Smc Pneumatics, Inc. to response to [253-1] motion for judgment on the pleadings with respect to the Stoll Patent Non-Infrigement ("sleeve made of a magnetizable material"), filed. (scj) [Entry date 10/31/94] [1:88cv1814]

10/21/94 282 Memorandum by Smc Pneumatics, Inc. in opposition to Festo's Opposition to SMC's Brief in Support of it's Mo[ti]on to Prejudgement Interest, filed. (scj) [Entry date 10/31/94] [1:88cv1814]

10/21/94 283 Reply by Smc Pneumatics, Inc. to response to [255-1] motion for judgment on the pleadings with respect to the Stoll Patent Invalidity ("Best mode and obviousness") and Carroll Patent Invalidity (Obviousness), filed. (scj) [Entry date 10/31/94] [1:88cv1814]

10/21/94 284 Response by Smc Pneumatics, Inc. in opposition to [274-1] opposition memorandum, filed. (scj) [Entry date 10/31/94] [1:88cv1814]

10/21/94 285 Response by Smc Pneumatics, Inc. in opposition to [273-1] opposition memorandum, filed. (scj) [Entry date 10/31/94] [1:88c1814]

10/21/94 286 Reply by Smc Pneumatics, Inc. to Festo's response to SMC's Rule 50 and Rule 59 Motions concerning Festo's Asserted Lost Profits Damages, filed. (scj) [Entry date 10/31/94] [1:88cv1814]

10/24/94 – Motion hearing held-#296, #297-300, #301 and #257 (scj) [Entry date 11/13/94] [1:88cv1814]

10/24/94 302 Judge Patti B. Saris. Clerk's Notes: re: Post Trial Motions granting [296-1] motion for leave to file response to opposition, denying [297-1] motion for judgment on the pleadings on the Stoll Patent Non-Infringement (Sleeve made of a magnetizable material, denying

[298-1] motion for judgment on the pleadings on the Stoll Patent Non-Infringement (Two Seal-One Seal), denying [299-1] motion for judgment on the pleadings on the Stoll Patent Invalidity (Best Mode and Obviousness and Carroll Patent Invalidity (Obviousness), denying [300-1] motion for judgment on the pleadings concerning Festo's asserted lost profit damages, denying [301-1] motion for new trial, denying [257-1] motion for new trial under the Alternative Rule 59-Fees date to stop as of last day of trial (7/21/94) stay pending appeal w/b denied once injunction enters. Order of injunctions w/b stayed for 45 days. Any supplemental filings due 10/26/94 Court Reporter: Marie Cloonan (scj) [Entry date 11/13/94] [1:88cv1814]

10/26/94 – Judge Patti B. Saris. Endorsed Order entered denying [255-1] motion for judgment on the pleadings with respect to the Stoll Patent Invalidity ("Best mode and obviousness") and Carroll Patent Invalidity (Obviousness). (scj) [Entry date 10/27/94] [1:88cv1814]

10/26/94 – Judge Patti B. Saris. Endorsed Order entered denying [254-1] motion for judgment on the pleadings with respect to the Stoll Patent Non-Infringement ("Two seal-one seal"). (scj) [Entry date 10/27/94] [1:88cv1814]

10/26/94 – Judge Patti B. Saris. Endorsed Order entered denying [253-1] motion for judgment on the pleadings with respect

to the Stoll Patent Non-Infri[n]gement ("sleeve made of a magnetizable material"). (scj) [Entry date 10/27/94] [1:88cv1814]

10/26/94 – Judge Patti B. Saris. Endorsed Order entered denying [256-1] motion to alter judgment on th grounds that there was no substantial evidence to support the jury's 100% lost profit damages of $4,739,183.00. (scj) [Entry date 10/27/94] [1:88cv1814]

10/26/94 – Judge Patti B. Saris. Endorsed Order entered denying [255-1] motion for judgment on the pleadings with respect to the Stoll Patent Invalidity ("Best mode and obviousness") and Carroll Patent Invalidity (Obviousness). (scj) [Entry date 10/31/94] [1:88cv1814]

10/27/94 – Judge Patti B. Saris, by the Court, by Deputy clerk Whitney. Endorsed Order entered granting [249-1] motion for entry of judgment. (SEE SEPARATE JUDGEMENT ENTERED) (scj) [Entry date 10/31/94] [1:88cv1814]

10/27/94 290 Judge Patti B. Saris. Judgment entered for Smc Pneumatics, Inc. against Festo Corp. Principal: $4,322,456.00 , and Prejudgment interest in the amount of $416,727.00. Each party is to bear its own costs and attorneys' fees. Judgmement is hereby entered in favor of Platiff Festo Corporation against Defendants SMC Corporation and SMC Pneumatics, Inc. and each of them on the issues of liability and damages. (scj) [Entry date 10/31/94] [1:88cv1814]

10/28/94	291	SMC's Objections to Proposed Judgement (scj) [Entry date 11/01/94] [1:88cv1814]
10/28/94	292	Response by Festo Corp. in opposition to proposed judgement. (attachment-Irrevocable Standby Letter of Credit Account Form of the Agahi Bank, Limited), filed. (scj) [Entry date 11/01/94] [1:88cv1814]
10/31/94	278	Memorandum by Festo Corp. in opposition to [256-1] motion to alter judgment on th grounds that there was no substantial evidence to support the jury's 100% lost profit damages of $4,739,183.00, filed. (scj) [1:88cv1814]
10/31/94	288	Motion by Smc Pneumatics, Inc. to amend the judgement enterd by the Court on October 28, 1994, filed. (scj) [1:88cv1814]
10/31/94	294	Motion by Smc Pneumatics, Inc. to amend [290-1] judgment order entered on October 28, 1994, filed. (scj) [Entry date 11/03/94] [1:88cv1814]
11/3/94	295	Response by Festo Corp. in opposition to [288-1] motion to amend the judgement enterd by the Court on October 28, 1994, filed. (scj) [Entry date 11/04/94] [1:88cv1814]
11/3/94	304	Response by Smc Pneumatics, Inc. in opposition to [275-1] opposition memorandum filed by Festo concerning SMC's Motion for Relief under Rule 59(e), filed. (scj) [Entry date 11/21/94] [1:88cv1814]

11/9/94	297	Refiling (as suggested by the Court at the October 24, 1994 hearing) of the Motion by Smc Pneumatics, Inc. for judgment on the pleadings on the Stoll Patent Non-Infringment (Sleeve made of a magnetizable material, filed. (scj) [Entry date 11/10/94] [1:88cv1814]
11/9/94	298	Refiling (as suggested by the Court at the October 24, 1994 hearing) of the Rule 50 (b) Motion by Smc Pneumatics, Inc. for judgment on the pleadings on the Stoll Patent Non-Infringement (Two Seal-One Seal), filed. (scj) [Entry date 11/10/94] [1:88cv1814]
11/9/94	299	Refiling (at the suggestion of the Court at the October 24, 1994 hearing) of the Rule 50(b) Motion by Smc Pneumatics, Inc. for judgment on the pleadings on the Stoll Patent Invalidity (Best Mode and Obviousness and Carroll Patent Invalidity (Obviousness), filed. (scj) [Entry date =11/10/94] [1:88cv1814]
11/9/94	300	Refiling of the Rule 50 and Rule 59 Motion (at the suggestion of the Court at the October 24, 1994 hearing) by Smc Pneumatics, Inc. for judgment on the pleadings concerning Festo's asserted lost profits damages, filed. (scj) [Entry date 11/10/94] [1:88cv1814]
11/9/94	301	Refiling of Rule 59 Motion by Smc Pneumatics, Inc. for new trial, filed. (scj) [Entry date 11/10/94] [1:88cv1814]
11/10/94	–	Judge Patti B. Saris. Endorsed Order entered denying [294-1] motion to amend [290-1] judgment order entered

		on October 28, 1994. SMC's motion for a stay of the execution upon the judgment and for the substitution of a letter of credit and agreement (exhibit A) instead of a supercedeas bond is allowed (scj) [Entry date 11/14/94] [1:88cv1814]
11/10/94	– 303	Notice of appeal to Federal Circuit by Smc Pneumatics, Inc. filed. Fee Status: pd Fee Amount: $105.00 Receipt #: 264844 Appeal re: Appeal record due on 12/12/94 (mmh) [Entry date 11/16/94] [1:88cv1814]
11/14/94	–	Judge Patti B. Saris, by the Court, by Deputy Clerk Whitney. Endorsed Order entered denying [301-1] motion for new trial, denying [300-1] motion for judgment on the pleadings concerning Festo's asserted lost profits damages, denying [299-1] motion for judgment on the pleadings on the Stoll Patent Invalidity (Best Mode and Obviousness and Carroll Patent Invalidity (Obviousness), denying [298-1] motion for judgment on the pleadings on the Stoll Patent Non-Infringement (Two Seal-One Seal), denying [297-1] motion for judgment on the pleadings on the Stoll Patent Non-Infringment (Sleeve made of a magnetizable material. (scj) [Entry date 11/16/94] [1:88cv1814]
11/18/94	305	Amended Notice of appeal by Smc Pneumatics, Inc. filed. Fee Status: waived Fee Amount: $105.00: Appeal record due on 12/19/94 (scj) [Entry date 11/23/94] [1:88cv1814]

11/28/94	321	Notice of Docketing Appeal in the Federal Circuit Appeal No. 95-1079 (scj) [Entry date 12/10/94] [1:88cv1814]
12/6/94	306	Transcript of proceedings for 6/29/94, before Judge: Saris. (mmh) [1:88cv1814]
12/6/94	307	Transcript of proceedings for 7/5/94, before Judge: Saris. (mmh) [1:88cv1814]
12/6/94	308	Transcript of proceedings for 7/6/94, before Judge: Saris. (mmh) [1:88cv1814]
12/6/94	309	Transcript of proceedings for 7/7/94, before Judge: Saris. (mmh) [1:88cv1814]
12/6/94	310	Transcript of proceedings for 7/8/94, before Judge: Saris. (mmh) [1:88cv1814]
12/6/94	311	Transcript of proceedings for 7/11/94, before Judge: Saris. (mmh) [1:88cv1814]
12/6/94	312	Transcript of proceedings for 7/12/94, before Judge: Saris. (mmh) [1:88cv1814]
12/6/94	313	Transcript of proceedings for 7/13/94, before Judge: Saris. (mmh) [1:88cv1814]
12/6/94	314	Transcript of proceedings for 7/14/94, before Judge: Saris. (mmh) [1:88cv1814]
12/6/94	315	Transcript of proceedings for 7/18/94, before Judge: Saris. (mmh) [1:88cv1814]
12/6/94	316	Transcript of proceedings for 7/19/94, before Judge: Saris. (mmh) [1:88cv1814]
12/6/94	317	Transcript of proceedings for 7/20/94, before Judge: Saris. (mmh) [1:88cv1814]
12/6/94	318	Transcript of proceedings for 7/21/94, before Judge: Saris. (mmh) [1:88cv1814]
12/6/94	319	Transcript of proceedings for 10/24/94, before Judge: Saris. (mmh) [1:88cv1814]

12/6/94	320	Transcript of proceedings for 11/10/94, before Judge: Saris. (mmh) [1:88cv1814]
12/6/94	–	Order (1) SMC's motion for a stay, pending appeal, is denied. (2) SMC's motion to file a reply is granted. 95-1066 (mmh) [Entry date 12/12/94] [1:88cv1814]
12/8/94	322	Mandate of US Court of Appeals re: [303-1] appeal dismissing [303-1] appeal. Appeal Number 95-1079 (mmh) [Entry date 12/12/94] [1:88cv1814]
1/5/95	–	Case closed. (dlw) [1:88cv1814]
12/14/95	–	Notice of Docketing Record on Appeal from USCA re: received. USCA NUMBER: 95-1066 Case from Federal Circuit (mmh) [Entry date 12/18/95] [1:88cv1814]
12/14/95	324	Judge Patti B. Saris. Judgment entered in the United States Court of Appeals for the Federal Circuit affirming the judgment entered by United States District Judge Patti B. Saris on October 31, 1994. (scj) [Entry date 01/17/96] [1:88cv1814]
4/2/96	326	Judgment entered in the United States Court of Appeals for the Federal Circuit affirming the decision of the United States District Court for the Diestrict of Massachusetts entered on October 31, 1995 from Judge Patti B. Saris. Pre-Judgment interest % (scj) [Entry date 04/16/96] [1:88cv1814]

8/1/96	340	Judge Patti B. Saris . Order entered . . . Accordingly, the total damages due Festo, including post-judgment interest is $7,120,758 in accordance with the Judgment of October 27, 1994, FILED. (cc/cl) (cmg) [Entry date 08/05/96] [1:88cv1814]
8/12/96	–	Judge Patti B. Saris. Endorsed Order entered granting [355-1] motion to stay pending disposition by the Supreme Court. Allowed on the condition that the letter of credit is increased in value to cover th amount FESTO seeks by 9/12/96; issued cc/cl. (sat) [Entry date 08/13/96] [1:88cv1814]
12/22/00	347	Mandate of US Court of Appeals for the Federal Circuit re: reversing appeal 95-1066. (jr) [Edit date 01/03/01] [1:88cv1814]

FEDERAL CIRCUIT

DATE		PROCEEDINGS AND ORDERS
December 12, 1994	8	Received an *amended* notice of appeal (filed on 11/18/94) and certified list from the district court. (bah)
Feb 2, 1995		BRIEF FOR THE APPELLANT, filed. (MS-2/2/95)

Mar 14, 1995	BRIEF FOR THE APPELLEE, filed. (MS-3/14/95) (cr)
Mar 31, 1995	REPLY BRIEF FOR THE APPELLANT, filed. (MS-3/31/95) (cr)
Apr 7, 1995	JOINT APPENDIX, Vols-I-II-III 12 copies each filed, *Vol-III* (Confidential Nonconfidential Vol-III 5 copies filed. (MS-4/7/95) (cr)
April 14, 1995	SUPPLEMENTAL JOINT APPENDIX, Vols-II-&-III 12 copies each field. (MS-4/14/95) (cr) (Per fxg) 6/20/96.
December 14, 1995	AFFIRMED. "JUDGMENT ENTERED" (P). (av) 72 F3d 857
March 6, 1996	APPELLANT - COMBINED PETITION FOR REHEARING AND SUGGESTION FOR REHEARING IN BANC (MS-01/03/96) FILED 01/03/96 PETITION CIRCULATED: 01/18/96 SUGGESTION CIRCULATED: 02/07/98 RESPONSE REQUESTED FROM: APPELLEE (FESTO CORP.) RESPONSE DUE: 02/23/96 RESPONSE FILED: 02/23/96 RESPONSE CIRCULATED: 02/23/96 PETITION/SUGGESTION: DENIED/DECLINED ON 03/06/96. (EOD 03/06/96 BY SCH) 95-1065

April 17, 1997	29.	PETITION FOR WRIT OF CERTIORARI FILED 03/26/96,. SUPREME COURT : 95-1546, CERT. GN ON 03/17/97. 30. JUDGMENT: VAC.RMD ON 03/17/97. U.S.L.W.: 64-3669 (EOD 04/17/97 BY CS) 95-1066
June 9, 1997		APPELLANT - SUGGESTION FOR HEARING IN BANC (MS-04/04/97) FILED: 05/28/97 SUGGESTION CIRCULATED: 05/28/97 SUGGESTION: DECLINED ON 06/09/97. (EOD 06/09/97 BY AV) 95-1066
June 2, 1997	30.	[a] CERTIFIED COPY OF THE U.S. SUPREME CT. JUDGMENT RECEIVED: 06/02/97 (EOD 06/02/97) (AV) 95-1066
June 9, 1997	31	ORDERED: APPELLANTS' SUGGESTION FOR REHEARING IN BANC HAVING BEEN DECLINED, THE CASE IS RETURNED TO THE PANEL. THE MANDATE IS VACATED. SUPPLEMENTAL BRIEFING SCHEDULE SET OUT IN THIS ORDER. BY: CLERK. (CS-06/09/97) FILED: 06/09/97 (EOD 06/09/97) (AV) 95-1066
July 25, 1997		SMC CORP. ET AL. [APPELLANTS] - UPON REMAND FROM THE SUPREME COURT. OPENING BRIEF OF DEFENDANTS-APPELLANTS SMC

	CORP., ET AL. (MS-07/07/97), FILED: 07/07/97. [974282] (EOD 07/25/97 BY SPP) 95-1066
August 12, 1997	FESTO CORPORATION [APPELLEE] – ON REMAND FROM THE UNITED STATES SUPREME COURT, SUPPLEMENTAL BRIEF OF PLAINTIFF-APPELLEE FESTO CORPORATION (MS-08/11/97). FILED: 08/11/97. ~~Rule 33 Notice of Settlement Issued~~. (sp) [974398] (EOD 08/12/97 BY SPP) 95-1066
August 22, 1997	SMC CORP., ET AL. [APPELLANTS] – UPON REMAND FROM THE SUPREME COURT REPLY OF DEFENDANTS-APPELLANTS SMC CORP., ET AL. (MS-08/21/97). FILED: 08/21/97. [974488] (EOD 08/22/97 BY SPP) 95-1066
April 19, 1999	AFFIRMED IN PART, VACATED IN PART, AND REMANDED. PRECEDENTIAL OPINION BY: J. NEWMAN. JUDGMENT ENTERED: 04/19/99. COSTS AGAINST EACH SIDE. (EOD 04/19/99 BY KSH) 95-1066 JUDGMENT VACATED & OPINION OF CT. WITHDRAWN BY CT. ORDER ON 8/20/99.

August 20, 1999	APPELLANT – COMBINED PETITION FOR REHEARING AND SUGGESTION FOR REHEARING IN BANC (MS-05/03/99) FILED: 05/03/99 PETITION CIRCULATED: 05/03/99 SUGGESTION CIRCULATED: 05/13/99 RESPONSE REQUESTED FROM: APPELLEE (FESTO CORP.) RESPONSE DUE: 05/28/99 RESPONSE FILED: 05/28/99 RESPONSE CIRCULATED: 05/28/99 PETITION/SUGGESTION: DENIED/GRANTED ON 08/20/99. (EOD 08/20/99 BY AV) 95-1066
August 20, 1999	APPELLEE – PETITION FOR REHEARING (MS-05/03/99) FILED: 05/03/99 PETITION CIRCULATED: 05/03/99 PETITION: DENIED ON 08/20/99. (EOD 08/20/99 BY AV) 95-1066
October 20, 1999	SMC CORP., ET AL. [APPELLANTS] – IN BANC OPENING BRIEF OF DEFENDANTS-APPELLANTS SMC CORP., ET AL. (MS-10/19/99), FILED: 10/19/99. [001115] (EOD 10/20/99 BY SPP) 95-1066
November 30, 1999 44.	PROCTER & GAMBLE – MOTION OF THE PROCTER & GAMBLE COMPANY FOR AN EXTENSION OF TIME TO FILE AN AMICUS BRIEF. (FS-11/17/99) FILED;

11/17/99. REPLY 1 (46) FILED: 11/22/99. ACTION ON MOTION 47): MOTION GRANTED THE BRIEF IS DUE 12/15/99. BY CT- EN BANC. FILED: 11/30/99, (EOD 11/30/99 BY AV) 95-1066

November 19, 1999 45. PROCTER & GAMBLE CO (AMICUS) – NOTICE THAT APPELLANT'S WILL NOT BE FILING A RESPONSE IN OPPOSITION TO THE MOTION FOR EXTENSION OF TIME TO FILE BRIEF. (FS-11/18/99) RECEIVED: 11/18/99 (EOD 11/19/99) (AMT) 95-1066

December 1, 1999 A.I.P.L.A. [AMICUS] – BRIEF FOR AMICUS CURIAE AMERICAN INTELLECTUAL PROPERTY LAW ASSOCIATION (MS-11/29/99). FILED: 11/29/99. [001162] (EOD 12/01/99 BY AVV) 95-1066

December 2, 1999 FESTO CORPORATION [APPELLEE] – EN BANC RESPONSIVE BRIEF OF PLAINTIFF-APPELLEE FESTO CORPORATION (MS-12/01/99). FILED 12/01/99. ENTRY OF APPEARANCE NOTICE ISSUED. [001163] (EOD 12/02/99 BY SPP) 95-1066

December 2, 1999 48. CERTIFICATE OF INTEREST FOR THE AMICUS CURIAE,

LITTON SYSTEMS INC. (MS-12/01/99) FILED: 12/01/99. (EOD 12/02/99 BY AMT) 95-1066

December 2, 1999 49. HEWLET PACKARD – MOTION OF HEWLETT PACKARD CO FOR LEAVE TO FILE BRIEF AS AMICUS CURIAE IN SUPPORT OF DEFENDANTS-APPELLANTS. (FS-12/01/99) FILED: 12/02/99. ACTION ON MOTION (49); MOOT. LEAVE OF COURT TO FILE AS AMICUS IS NOT REQUIRED IN THIS CASE. BY CLERK. FILED: 12/02/99. (EOD 12/02/99 BY AMT) 95-1066

December 2, 1999 50. CERTIFICATE OF INTEREST FOR THE AMICUS CURIAE, HEWLETT-PACKARD CO. (F-12/01/99) FILED: 12/02/99. (EOD 12/02/99 BY AMT) 95-1066

December 2, 1999 51. CERTIFICATE OF INTEREST FOR THE AMICUS CURIAE, Procter & Gamble Co. (MS-11/30/99) FILED: 12/01/99. (EOD 12/02/99 BY AMT) 95-1066

December 2, 1999 LITTON SYSTEMS, INC. [AMICUS] – EN BANC BRIEF OF AMICUS CURIAE LITTON SYSTEMS, INC. IN SUPPORT OF AFFIRMANCE (MS-12/01/99), filed: 12/01/99,

[001163] (EOD 12/02/99 BY SPP) 95-1066

December 2, 1999 — THE BAR ASSOCIATION OF THE DISTRICT OF COLUMBIA [AMICUS] – AMICUS CURIAE BRIEF OF THE PATENT. TRADEMARK & COPYRIGHT SECTION OF THE BAR ASSOCIATION OF THE DISTRICT OF COLUMBIA IN SUPPORT OF NEITHER PARTY (MS-12/01/99), FILED; 12/01/99. [001164] (EOD 12/02/99 BY SPP) 95-1066

December 2, 1999 — THE PROCTER & GAMBLE COMPANY [AMICUS] – BRIEF FOR AMICUS CURIAE THE PROCTOR & GAMBLE COMPANY SUPPORTING DEFENDANTS-APPELLANTS' POSITION FOR REVERSAL (MS-11/30/99). FILED: 11/30/99, [001165] (EOD 12/02/99 BY SPP) 95-1066

December 3, 1999 — HEWLETT-PACKARD COMPANY [AMICUS] – BRIEF OF HEWLETT-PACKARD COMPANY AS AMICUS CURIAE IN SUPPORT OF DEFENDANTS-APPELLANTS (MS-12/01/99). FILED: 12/01/99, [001166] (EOD 12/03/99 BY SPP) 95-1066

December 3, 1999 — IBM, EATMAN KODAK COMPANY AND FORD MOTOR COMPANY [AMICUS] – BRIEF

FOR AMICI CURIAE INTERNATIONAL BUSINESS MACHINES CORPORATION, EASTMAN KODAK COMPANY AND FORD MOTOR COMPANY (MS-12/01/99). FILED: 12/01/99. [001166] (EOD 12/03/99 BY SPP) 95-1066

December 6, 1999 — THE HOUSTON INTELLECTUAL PROPERTY LAW ASSOCIATION [AMICUS] – BRIEF FOR AMICUS CURIAE OF THE HOUSTON INTELLECTUAL PROPERTY LAW ASSOCIATION REQUESTING AFFIRMANCE IN SUPPORT OF APPELLEE FESTO CORPORATION (MS-12/01/99). RECEIVED: 12/02/99, REJECTED: 12/06/99, CORRECTED BRIEF DUE: 12/20/99, [001166] (EOD 12/06/99 BY SPP) 95-1066

December 9, 1999 — THE HOUSTON INTELLECTUAL PROPERTY LAW ASSOCIATION [AMICUS] – CORRECTED BRIEF FOR AMICUS CURIAE OF THE HOUSTON INTELLECTUAL PROPERTY LAW ASSOCIATION REQUESTING AFFIRMANCE IN SUPPORT OF APPELLEE FESTO CORPORATION (MS-12/01/99), CORRECTED BRIEF RECEIVED:

	12/08/99, FILED: 12/01/99. [001166] (EOD 12/09/99 BY SPP) 95-1066
December 28, 1999	SMC CORP., ET AL. [APPELLANTS] – IN BANC REPLY BRIEF OF DEFENDANTS-APPELLANTS SMC CORP., ET AL. (MS-12/20/99). FILED: 12/20/99. [001186] (EOD 12/28/99 BY SPP) 95-1066
December 28, 1999	SMC CORP., ET AL. [APPELLANTS] – PURSUANT TO LEAVE OF COURT, RESPONSE OF DEFENDANTS-APPELLANTS SMC CORP., ET AL. TO BRIEFS SUBMITTED BY AMICUS CURIAE (MS-12/20/99). FILED: 12/20/99. [001186] (EOD 12/28/99 BY SPP) 95-1066
December 28, 1999	FESTO CORPORATION [APPELLEE] – COMBINED REPLY OF PLAINTIFF-APPELLEE FESTO CORPORATION TO THE BRIEFS OF AMICUS CURIAE (MS-12/20/99). FILED: 12/20/99. [001186] (EOD 12/28/99 BY SPP) 95-1066
January 6, 2000	SMC CORP., ET AL. [APPELLANTS] – UPON REMAND FROM THE SUPREME COURT, JOINT SUPPLEMENTAL APPENDIX (MS-08/27/97). FILED: 12/30/99. [001193]

	(EOD 01/06/00 BY SPP) 95-1066
January 6, 2000	SMC CORP., ET AL. [APPELLANTS] – JOINT APPENDIX (3 VOLUME) (Volume III has confidential and nonconfidential versions) (MS-12/30/99). FILED: 12/~~30~~ (sp) 29/99. [001193] (EOD 01/06/00 BY SPP) 95-1066
November 29, 2000	*Reversed*. Precedential Opinion by J. Schall. in which Mayer, Chief Judge, and Plager, Lourie, Clevenger, Bryson, Gajarsa, and Dyk, Circuit Judges, join; in which Michel, Rader and Linn, Circuit Judges, join with respect TO Parts III-A, III-B, and III-D; and in which Michel, Circuit Judge joins with respect to Part III-E. Concurring opinion by Plager, Circuit Judge; concurring opinion by Lourie, Circuit Judge; Opinion concurring-part and dissenting-in-part with respect to Part III-C by Michel, Circuit Judge, in which Rader, Circuit Judge joins; Opinion concurring-in-part and dissenting-in-part with respect TO Part III-C by Rader, Circuit Judge, in which Michel and Linn, Circuit Judges join; opinion concurring-in-part and dissenting-in-part with respect to Part III-C by Linn, Circuit Judge, in which

Rader, Circuit Judge joins; opinion concurring-in-part and dissenting-in-part with respect to Parts III-A, III-B, III-C, and IV by Newman, Circuit Judge.

Judgment entered: 11/29/00. Costs against each side. (eod by ksh on 11/29/00) 95-1066

February 23, 2001 — 65. THE APPLICATION FOR EXT. OF TIME TO FILE A WRIT OF CERT HAS BEEN PRESENTED TO THE CHIEF JUSTICE, WHO ON 2/13/01, EXTENDED THE TIME TO AND INCLUDING MARCH 29, 2001. (cs-02/13/01) RECEIVED: 02/23/01 (EOD 02/23/01) (BG) 95-1066

March 22, 2001 — 66. THE APPLICATION FOR AN EXTENSION OF TIME WITHIN WHICH TO FILE A CERT PETITION HAS BEEN PRESENTED TO THE CHIEF JUSTICE, WHO ON 3/20/01, EXTENDED THE TIME TO AND INCLUDING 4/9/01. (CS-03/20/01) RECEIVED; 03/20/81 (EOD 03/22/01) (BG) 95-1066

May 8, 2001 — PETITION FOR WRIT OF CERTIORARI FILED 04/09/01, SUPREME COURT #: 00-1543. (EOD 05/08/01 BY BG) 95-1066

June 19, 2001 — PETITION FOR WRIT OF CERTIORARI FILED 04/09/01, SUPREME COURT #: 00-1543, CERT. GRANTED ON

06/18/01. (EOD 06/19/01 BY BG) 95-1066

UNITED STATES DISTRICT COURT
DISTRICT OF MASSACHUSETTS

FESTO CORPORATION, Plaintiff and Counterclaim Defendant, v. SHOKETSU KINZOKU KOGYO KABUSHIKI CO LTD., a/k/a SMC CORPORATION and SMC PNEUMATICS, INC. Defendants and Counterclaim Plaintiffs.	Civil Action No. 88-1814-MA

REPORT OF SPECIAL MASTER
HERBERT F. SCHWARTZ, ESQ.
PURSUANT TO RULE 53(e)(1), F.R.Civ.P.

* * *

b. The Magnetizable Sleeve

Festo asserts that the SMC driven member's non-magnetizable sleeve is an equivalent of the magnetizable sleeve in claim 1 of the Stoll patent. (Festo's Post Trial Brief, pp. 3-7.) In support of this contention Festo urges that (1) the magnetizable sleeve limitation did not appear in the German Stoll patent and should not have been added to the U.S. patent (Festo's Post Trial Brief, p. 5; Tr. 457); and (2) the sleeve material does not affect the operation of the invention. (Festo's Post Trial Brief, pp.

5-6; Tr. 642-645.) Neither of these arguments is convincing.

First, the specification and prosecution history do not support Festo's assertion that the magnetizable limitation should not have been in claim 1. In the specification the sleeve is described as "made of a magnetizable material to reduce magnetic leakage fields." Col. 3, lines 61-62. The prosecution history shows that the patent was filed with a claim 1 that did not have the magnetizable limitation; claim 8, which was dependent from claim 1, had the limitation. In response to a rejection based on Section 112 ¶ 1, claim 1 was rewritten as claim 13 and claim 8 was canceled. (Px 14.) Since consideration was given to whether or not the term should appear in the claim after the first Office Action, Festo's assertion that it was not meant to be there is not persuasive.

Second, the specification contradicts Festo's argument that the sleeve material does not affect the operation of the invention. Festo has tried to characterize the invention as dealing only with sealing, wiping and guiding. (Festo's Post Trial Brief p. 3-4; Tr. 412-413.) Nevertheless, the specification not only describes the sleeve as being made from a magnetizable material but also explains the reason for choosing that material:

> If the driven assembly is provided with a sleeve made of a magnetizable material, which encircles the hollow cylindrical assembly of the magnet arrangement, magnetic leakage fields in the vicinity of the driven assembly can be kept to a minimum. In this way, undesirable braking forces, which would otherwise be generated while piston and driven assembly pass

magnetizable machine components, are avoided. (Px 15 col. 2, lines 23-30.)

Festo performed an experiment which was supposed to demonstrate that regardless, of whether the sleeve was made of a magnetizable or a non-magnetizable material, the operation of the rodless cylinder was the same. (Tr. 697-700; Festo's Post-Trial Brief, p. 6.) SMC criticized the test because it was not performed under load. (Tr. 806-808; SMC's Post-Trial Brief, p. 15.) More importantly, the test shed no light on whether or not both sleeves achieved the advantages that Stoll attributed to having a sleeve made of a magnetizable material: i.e. that both magnetizable and non-magnetizable sleeves served to minimize magnetic leakage fields in substantially the same way.

According to the specification of the Stoll patent, a sleeve made of a magnetizable material achieves the benefit of minimizing magnetic leakage fields. Stoll claims a device with a sleeve made of a magnetizable material. The specification is silent concerning the use of a sleeve made of a non-magnetizable material. Moreover, at the time the application was filed, Stoll thought there was an advantage to using a sleeve made of a magnetizable material. (Tr. 461.)

Although Stoll initially filed a claim broad enough to cover the use of a sleeve made of a magnetizable material, he opted not to pursue such a claim after the first Office Action. As the Federal Circuit said in *Unique Concepts, Inc.* v. *Brown*, 939 F.2d 1558, 1562, 19 USPQ2d 1500, 1504 (Fed.Cir. 1991):

> The statute requires that an inventor particularly point out and distinctly claim the subject matter of his invention. 35 U.S.C. § 112 (1988). It would run counter to this statutory provision for an applicant for patent to expressly state throughout his specification and in his claims [a claim limitation] and then be allowed to avoid that claim limitation in a later infringement suit by pointing to one paragraph in his specification stating an alternative that lacks the limitation, and thus interpret the claim contrary to its plain meaning. Such a result would encourage an applicant to escape examination of a more broadly-claimed invention by filing narrow claims and then, after grant, asserting a broader scope of the claims based on a statement in the specification of an alternative never presented in the claims for examination.[22]

The subject matter disclosed but not claimed in a patent application is dedicated to the public. *Miller* v. *Brass Co.*, 104 U.S. 350 (1881). As the Federal Circuit pointed out in *Unique Concepts*, if the applicant intended to claim an alternative embodiment, he had to persuade the examiner to issue the claim. As is apparent from the Stoll patent prosecution history, Stoll submitted one claim without the magnetizable material limitation and another with the limitation. Both claims were rejected and Stoll decided to only pursue a claim directed to a sleeve made of a magnetizable material. (Px 14.)

---

[22] See also *International Visual Corporation* v. *Crown Metal Manufacturing Co, Inc.*, No. 92-1262 (Fed.Cir. 1993) (Lourie, J., concurring at p. 5).

The doctrine of equivalents is the exception and not the rule. In this case, the meaning and scope of claim 1 of the Stoll patent was clear. Stoll consciously chose to not claim an embodiment of his invention that used a magnetizable sleeve. Festo cannot now try to use the doctrine of equivalents to recapture a claim that Stoll abandoned during prosecution "because other players in the marketplace are entitled to rely on the record made in the Patent Office in determining the meaning and scope of the patent." *Lemelson* v. *General Mills, Inc.*, 968 F.2d 1202, 1208, 23 USPQ2d 1284, 1289 (Fed.Cir. 1992).

Festo's commercial embodiment, like SMC's, uses a non-magnetizable sleeve. (Px 118, 210.) However, the patent claim, and not any commercial embodiment, serves as notice to others of the patentees rights. SMC had a right to rely on the claim language, in light of the specification and the prosecution history, and to design around it. *London* v. *Carson Piri Scott & Co.*, 946 F.2d 1534, 20 USPQ2d 1456 (Fed.Cir. 1991), *supra*, accord, *State Industries* v. *A.O. Smith Corp.*, 751 F.2d 1226, 224 USPQ 418 (Fed.Cir. 1985). Therefore, claims 1-3 and 5-7 of the Stoll patent are not infringed by the SMC rodless cylinders.

IV. DAMAGES

A. FESTO'S MOTION TO INCLUDE DAMAGES PROOF

The majority of SMC's sales were made in the years 1989-1991. (Tr. 1388; Dx 494.) This information was produced on August 31, 1992 pursuant to an Order of the Special Master. (Dkt. 172.) To protect the confidentiality

of SMC's sales data, Festo used an independent accountant to testify about damages at the hearing on damage.

There was a dispute between the parties as to whether Festo should be permitted to introduce into evidence the testimony by its accountant, Steven Skalak, and related exhibits taken *de bene* at the hearing on damages because basis for the new evidence was not included in the pretrial order.

* * *

> sales denied to him is the measure of his loss, and the Infringer is liable for that. *Lam, Inc.* v. *Johns-Manville Corp.*, 718 F.2d 1056, 1065, 219 USPQ 670, 675 (Fed.Cir. 1983) quoting *Livesay Window Company* v. *Livesay Industries*, 251 F.2d 469, 471-72, 116 USPQ 167, 169 (5 Cir. 1958).

Festo and SMC were the only suppliers of sealed magnetically coupled rodless cylinders during the period of infringement. (Tr. 32.) There was a demand for the magnetically coupled rodless cylinder because of their unique characteristics. (Tr. 28-30.)

Mechanical rodless cylinders, like the band and cable cylinders, did not offer the advantages of the magnetically coupled rodless cylinder. (Tr. 1415-1425, 1844-1860.) Among these advantages are the ability to be leak proof and the ability to work without special lubricated operating fluid. Moreover, Festo could have met the demand for increased rodless cylinders. (Tr. 1427, 1431.)

Festo failed to prove, however, that it lost any profits. For seven out of ten years reported Festo had operating

losses. (Tr. 1643, 1755-1756.) For every dollar of Festo sales, forty to fifty cents represents the cost of the product and fifty to sixty cents represents the selling expenses. (Tr. 1916-1918; Dx 102.) Festo did not show that the DGOs were any more profitable than Festo's other products. (Tr. 1638-1639.) Thus Festo did not demonstrate that, on a straight dollar average, any increase in sales would have led to an increase in profits. (Tr. 1640, 1691-1692.) Festo did not offer proof to support the argument that on an incremental basis additional sales would have created profits.

Festo asserted that a company does not have to be profitable to recover lost profits. Festo relied on *Saf-Gard Products, Inc.* v. *Service Parts, Inc.*, 491 F.Supp. 996, 206 USPQ 976 (D.Ariz. 1980) for this proposition. This reliance is misplaced. In *Saf-Gard*, the plaintiff was awarded lost profits based on a price erosion theory. The infringing defendant's presence and actions in the marketplace drove down the price of the product, making the plaintiff less profitable and, ultimately, bankrupt. The court awarded damages based on the uneroded price. 491 F.Supp. at 1009, 206 USPQ at 986-987. Festo did not claim price erosion. In fact, Festo's rodless cylinders remained more expensive than SMC's throughout the infringement period. (Tr. 1437, 1524.)

Festo has simply failed to show that it would have netted anything had it made SMC's sales. There is no basis for awarding damages under a lost profits theory.

2. Reasonable Royalty

When a patent owner cannot establish lost profits or an established royalty, it is entitled to a reasonable royalty. This is characterized as the amount that would have been set at the time the infringement began between a hypothetical willing patent owner and a willing potential

* * *

Lantech, Inc., 807 F.2d 970, 1 USPQ2d 1202 (Fed.Cir. 1986). When the patentee makes substantive changes, the reexamined claims are treated like reissue claims under 35 U.S.C. § 252. "Thus a person practicing a patented invention would not be considered an infringer for the period between issuance of an invalid patent and the conversion through reexamination to a valid patent." *Fortel Corp.* v. *Phone-Mate, Inc.*, 825 F.2d 1577, 1579, 3 USPQ2d 1771, 1773 (Fed.Cir. 1987), quoting H.R. Rep. No. 1307, 96th Cong., 2d Sess. 8 (1980).

During reexamination of the Carroll patent, Festo canceled the only independent claim and added a new independent claim. See *supra*. pp. 15-17. This was a substantial change. As a result, the damages are based on SMC sales made from the time the reexamination certificate issued (October 25, 1988) to the expiration of the reexamined Carroll patent (December 18, 1990). The total infringing SMC sales was $1,470,127. A fifteen percent royalty equals $220,519.

1. Prejudgment Interest

35 U.S.C. § 284 authorizes the award of "interest . . . as fixed by the court." In *General Motors Corp.* v. *Devex Corp.*, 461 U.S. 648, 657, 217 USPQ 1185, 1189 (1983), the Supreme Court found that awarding prejudgment interest was within the discretion of the trial court, but that prejudgment interest should ordinarily be awarded

* * *

Thus, Festo's contention is unfounded. SMC sought the advice of outside counsel. SMC's counsel reviewed the patents and their prosecution histories and formed a competent legal opinion regarding infringement of the Stoll patent and validity of the Carroll patent. Festo has not proved willful infringement by clear and convincing evidence by SMC.

A. ATTORNEY'S FEES

35 U.S.C. § 285 states. "The court in exceptional cases may award reasonable attorney's fees to the prevailing party." Festo has asked for an award of attorney's fees based on its contention that SMC's infringement was willful. (Fest Post Trial Brief, p. 48.) SMC has also requested an award of attorney's fees based on its contention that several of Festo's arguments were frivolous and that Festo did not disclose the best mode of making the Stoll patent. (SMC's Post Trial Brief, pp. 47-48.)

This lawsuit was hotly contested. However, this is not an exceptional case meriting the award of attorney's

fees. I recommend that each side bear its own costs and attorney's fees.

VI. SUMMARY JUDGMENT AND DIRECTED VERDICT MOTIONS

SMC moved for summary judgment of invalidity of the Stoll patent based on failure to disclose the best mode. (Dkt. 104.) SMC moved for summary judgment of noninfringement of the Stoll patent based on its use of a non-magnetizable sleeve. (Dkt. 117.) SMC also moved for summary judgment of noninfringement of the reexamined Carroll patent and the Stoll patent based on its use of one seal, instead of two. (Dkt. 122.) At the conclusion of plaintiff's evidence, SMC moved for a directed verdict. (Tr. 866.) SMC renewed this motion at the conclusion of the hearing on liability (Tr. 1302.)

It is proper to grant summary judgment under Rule 56(c), F.R.Civ.P. if " the pleadings, depositions, answers to interrogatories, and admissions on file, together with the affidavits, if any, show that there is no genuine issue as to any material fact and that the moving party is entitled to a judgment as a matter of law." The Supreme Court has said that under this standard, "the mere existence of *some* alleged factual dispute between the parties will not defeat an otherwise properly supported motion for summary judgment; the requirement is that there be no *genuine* issue of *material* fact. *Anderson* v. *Liberty Lobby, Inc.*, 477 U.S. 242, 247-48 (1986) (emphasis in original).

The Federal Circuit has found that "[s]ummary judgment is as available in patent cases as in other areas

of litigation." *Continental Can Co. USA, Inc.* v. *Monsanto Co.*, 948 F.2d 1264, 1265, 20 USPQ2d 1746, 1747 (Fed.Cir. 1991). Of course, the court must "view the evidence presented in a light most favorable to the nonmoving party" and "draw all reasonable inferences in favor of the nonmoving party." *C.R. Bard, Inc.* v. *Advanced Cardiovascular Systems*, 911 F.2d 670, 672, 15 USPQ2d 1540, 1542 (Fed.Cir. 1990). "The burden of establishing summary judgment is with the movant, with due consideration to the burdens and presumptions at trial." *Laitram Corp.* v. *NEC Corp.*, 952 F.2d 1357, 1363, 21 USPQ2d 1276, 1280-1281 (Fed.Cir. 1991).

The Supreme Court has adopted the view that the standard for summary judgment mirrors the standard for a directed verdict. *Anderson* at 250. Thus "the trial judge must direct a verdict if, under the governing law, there can be but one reasonable conclusion as to the verdict." *Id.* Directed verdicts are now called judgments as a matter of law under Rule 50, F.R.Civ.P., but this standard has not changed. 1991 Advisory Committee Notes. Because the motion for a directed verdict was made to a Special Master, and not a trial judge, I have also considered this motion under Rule 52(c)[24] as a motion for judgment on partial findings. Rule 52(c) parallels Rule 50(a), allowing the court to enter judgment when it can appropriately make a disposition on the evidence.

In light of the findings of fact and recommendations made in this report after the hearings herein, I

[24] Before December 1, 1991 such a motion was available under Rule 41(b), F.R.Civ.P. See, e.g., *Pitts* v. *United States* 599 F.2d 1103 (1 Cir. 1979).

recommend that the motion concerning invalidity on best mode of the Stoll patent be denied. I also recommend that the notion concerning the noninfringement of both patents based on SMC's use of one seal be denied.

Based on the analysis contained in this report concerning the magnetizable sleeve limitation in the Stoll patent claims, summary judgment and a directed verdict or judgment on partial findings in favor of SMC is appropriate with respect to SMC's noninfringement of claims 1-3 and 5-7 of Stoll.[25] Festo and SMC agree that the SMC driven member has a non-magnetizable sleeve. Therefore there is no dispute as to any material fact. The dispute centers on the meaning of the limitation in the claim.

Claim construction is a question of law for the court. *Loctite Corp.* v. *Ultraseal, Ltd.*, 781 F.2d 861, 228 USPQ 90 (Fed.Cir. 1985). To properly construe the claims, the court should look to the specification, file history, other claims and expert testimony. *Whittaker Corp.* v. *UNR Industries, Inc.*, 911 F.2d 709, 15 USPQ2d 1742 (Fed.Cir. 1990); *Lemelson* v. *General Mills, Inc.*, 968 F.2d 1202, 1208, 23 USPQ2d 1284, 1289 (Fed.Cir. 1992). As demonstrated *supra*. pp. 47-51, when properly construed the Stoll claims cannot be read to cover the non-magnetizable sleeves used in the SMC rodless cylinders. Therefore I recommend that SMC's motion for summary judgment

[25] The discussion in this report makes plain that there is no basis for granting Festo's motion for a directed verdict. (Tr. 1302.) And, in any event, Festo never briefed such a motion as it said it would. (Tr. 1308.)

and its motion for directed verdict of non-infringement of claims 1-3 and 5-7 of Stoll be granted.

VII. CONCLUSION

SMC's rodless cylinders do not infringe any of claims 1-3 or 5-7 of the Stoll patent. The SMC cylinders with cushions, in both the basic and the slider lines, and two seals literally infringe claims 5, 6 and 9 of the reexamined Carroll patent. The SMC cylinders with cushions, in both the basic and the slider lines, and one seal infringe claims 5, 6 and 9 under the doctrine of equivalents. Based on this infringement of the reexamined Carroll patent, I recommend that damages and prejudgment interest in the amount of $251,850 be awarded.

/s/ Herbert F. Schwartz
Herbert F. Schwartz, Esq.
Special Master

April 27, 1993

IN THE UNITED STATES DISTRICT COURT
FOR THE DISTRICT OF MASSACHUSETTS

FESTO CORPORATION, Plaintiff and Counterclaim Defendant, v. SHOKETSU KINZOKU KOGYO KABUSHIKI CO., LTD., a/k/a SMC CORPORATION, and SMC PNEUMATICS, INC., Defendants and Counterclaim Plaintiffs.	Civil Action No. 88-1814-MA BBO #549137

FESTO CORPORATION'S OBJECTIONS TO REPORT OF SPECIAL MASTER HERBERT F. SCHWARTZ, ESQ. PURSUANT TO RULE 53(e)(3), F.R. CIV. P.

* * *

invention includes a number of functionally and structurally cooperatively assembled components of which the sleeve is merely one of many. This is readily apparent from reading claim 1 of the patent. The solution of the wiping, guiding and sealing problems as defined in Claim 1 of the Stoll patent involved the use of separate guide and seal rings, as acknowledged by the Special Master on pages 27 and 38-39 of his Report. The separate rings act in cooperation with the remaining elements of the claim to carry out the functions of the invention in

wiping, guiding and sealing in order to operate in keeping dirt and impurities from interfering with the functioning of the rodless cylinder.

The sleeve on the outer or driven member serves to encircle and assist in holding the rings and magnets in position. Whether it is made of steel (magnetizable) or aluminum (non-magnetizable) does not matter for the recited functions of the claimed invention including wiping, guiding and sealing. (TR 411-413; 642-645).

The gratuitous inclusion of the words relating to the sleeve as being formed "of a magnetizable material" was not necessary and not intended by the inventor to have been included and should not be considered as material to the interpretation of the claim for purposes of infringement. (TR 412). Dr. Stoll should not be held to unintentional limitations added incorrectly by an attorney of which he was not aware and of which he certainly did not intend. In the remainder of the world, Stoll's corresponding patents do not have a sleeve material restriction in their main claim. (TR 412). The claim should clearly be interpreted to hypothetically omit the language "of a magnetizable material". The law clearly permits such an interpretation as discussed below.

Minimizing braking forces due to magnetic field leakage is incidental to the invention and not included in the claim. Dr. Wolf pointed this out in his testimony (TR 820-821). Dr. Stoll also clearly explained that for purposes of the invention, the sleeves are the same. (TR 411-413; 535-539). In fact, the difference in minimizing magnetic field leakage braking forces is insubstantial as pointed out by the uncontroverted testimony of Dr. Wolf. The

video film presented as evidence by Festo through Dr. Wolf displaying two cylinders operating in synchronization for a period of time shows no difference in braking force between the steel and aluminum sleeves in operation. (Px P-22).

It must be emphasized that claim 1 does not require and does not even mention a function of minimizing magnetic field leakage to carry out the invention.

There is no prior art basis for limiting the interpretation of the claim in this manner. There was no file wrapper estoppel. The Examiner presented no prior art to limit this interpretation

* * *

carrying out the invention and then attempted to invalidate the patent on that basis. (TR 971, 988). Accordingly, no prior art was presented and none is known which would require the Stoll invention to include a recitation of the magnetizable material for the purpose of minimizing magnetic leakage fields or any other purpose. A hypothetical Claim 1 eliminating the words "of a magnetizable material" is clearly patentable over the prior art. In rejecting SMC's failed attempt to invalidate Claim 1 of the Stoll patent independent of whether the sleeve is magnetizable or not, the Master clearly pointed out the numerous ways in which the patent claims in issue were valid independent of the sleeve material. (Master's Report pgs. 31-42).

Accordingly, there was no reason for Dr. Stoll to include a gratuitous recitation such as magnetizable sleeve material in his broadest claim, Claim 1. He has

clearly testified that this was not the case. He never intended to do so and it should not have been done. (TR 457). The prior art does not require it and Dr. Stoll did not choose to include it. It was mistakenly included by the attorney prosecuting the application before the United States Patent and Trademark Office without consultation with the inventor. (TR 455). It certainly does not represent the inventor's wishes and he should not be bound by it.

The Examiner at the Patent and Trademark Office certainly did not require that the recitation be included in the claim. He

* * *

UNITED STATES DISTRICT COURT
DISTRICT OF MASSACHUSETTS

FESTO CORPORATION, Plaintiff and Counterclaim Defendant, v. SHOKETSU KINZOKU KOGYO KABUSHIKI CO. LTD., a/k/a SMC CORPORATION and SMC PNEUMATICS, INC. Defendants and Counterclaim Plaintiffs.	Civil Action No. 88-1814-PBS

PLAINTIFF FESTO CORPORATION'S
PRETRIAL MEMORANDUM UNDER L.R. 16.5

* * *

100. Festo has its main headquarters on Long Island, New York and has about 100,000 square feet in its building.

101. Mr. Kurt Stoll is a graduate mechanical engineer and received his diploma in 1960. He is one of the owners of Festo KG, the parent of Plaintiff Festo. He is also a Director of Festo KG. He and his brother, Wilfried Stoll, are Managing Partners of Festo KG.

102. The products sold in the United States are manufactured and sold by Festo Corporation, the U.S. subsidiary of Festo KG.

FACTS WHICH FESTO INTENDS TO PROVE AT TRIAL IN SUPPORT OF EACH CLAIM

1. The Carroll and Stoll patents were duly and legally issued and are valid.

2. The making, assembly and selling of magnetically coupled rodless cylinders in this judicial district and elsewhere in the United States by SMC Pneumatics constitute direct and contributory infringement of, and active inducement to infringe, the Carroll and Stoll patents.

3. The shipping of parts of the magnetically coupled rodless cylinder into the United States for assembly here, and the selling of magnetically coupled rodless cylinders in this judicial district and elsewhere in the United States by SMC Corp.

* * *

and the magnets on the piston so that there would be minimal resistance to movement of the piston within the tube under pneumatic or hydraulic force. Additionally, it was necessary to seal the tube and to wipe dirt particles or contaminants within the tube away from the area where the magnets are located. In this way, the possibility of reducing the magnetic attraction force due to contamination or dirt is minimized.

91. Prior art rodless cylinders incorporated a single ring on the piston which was used to not only maintain the separation between the piston and the inner wall surface of the tube but also to create a seal with the inner wall surface so that fluid pressure can build up within the tube on one side of the piston to move the piston. A more rigid or harder material used for the seal is desirable in order to maintain the separation between the piston and the inner wall surface of the tube. However, when a more rigid or harder material is used for the seal, the sealing and wiping functions are not effectively obtained. On the other hand, if a soft resilient material is used for the seal, it will conform well to the engaging surface of the inner wall of the cylinder tube and seal and wipe effectively; but, the magnetic force and free floating piston will overcome the soft material and the magnets will engage the tube wall and interfere with the reciprocal movement of the piston in the tube.

92. Mr. Stoll conceived of a solution to the above problems. Mr. Stoll divided the task of accomplishing these separate functions into separate means positioned on the piston.

93. Mr. Stoll conceived of the idea of using an inner guide ring on the piston, which ring is made of a more rigid but slidable material, to maintain the proper spacing between the piston magnets and the wall of the tube while the piston reciprocately moves in the tube. Mr. Stoll further conceived of the idea of using a wiper ring adjacent to the guide ring where the wiper ring is made from a soft resilient material, which carries out the primary wiping and sealing function.

94. There is some overlap in function between the wiping and sealing ring and the guide ring and the ultimate result is a very effective magnetically coupled rodless cylinder which will have a long operational life.

95. The above problem and solutions are fully described in U.S. Patent No. 4,354,125, which issued on October 12, 1982 to Kurt Stoll.

96. The claims of the Stoll patent specifically define Mr. Stoll's invention in regard to the guiding, wiping and sealing functions.

* * *

DEFENDANT'S EXHIBIT 105

UNITED STATES DISTRICT COURT
DISTRICT OF MASSACHUSETTS

FESTO CORPORATION, Plaintiff and Counterclaim Defendant, v. SHOKETSU KINZOKU KOGYI KABUSHIKI CO., LTD., a/k/a SMC CORPORATION, and SMC PNEUMATICS, INC., Defendants and Counterclaim Plaintiffs.	Civil Action No. 88-1814-MA BBO #549137

PLAINTIFF FESTO CORPORATION'S
TRIAL MEMORANDUM

* * *

B. SMC's Infringement Of The Carroll Patent.

As will be established at trial, SMC has literally infringed claims 9, 5 and 6 of the Carroll patent. In other words, the accused SMC devices include each and every element recited in the above claims.

C. SMC's Infringement Of The Stoll Patent.

Most of the accused SMC devices include each and every element recited in claims 1-3 and 5-7 of the Stoll

patent with the exception of the composition of the cylindrical sleeve which encircles the tube of the driving member. Specifically, the sleeves of the accused devices are made from a non-magnetizable material, such as an aluminum alloy, instead of a magnetizable material as recited in the claims. In addition, some of the accused devices apparently employ only one sealing ring instead of "rings" as claimed.

1. The substitution of a non-magnetizable sleeve for a magnetizable sleeve does not substantially change the operation of the device as claimed.

The courts have addressed situations on all fours with the case at bar. In *Graver Tank, supra*, which is considered *the* classical equivalents decision, the patentee claimed a fusible composition containing "a major proportion of one or more alkaline earth metal silicates." The

* * *

thereby be well equipped to determine whether SMC has made a change of such substance as to make the doctrine of equivalents inapplicable, or whether they have simply replaced a sleeve of one type of material with one of a different material that does not cause the invention to operate in a materially different manner.

2. The use of one sealing ring, as opposed to more than one ring, for wiping the internal wall of the tube containing the piston is not a change of such substance as to make the doctrine of equivalents inapplicable.

It is well settled that "infringement is not avoided by making into one part that which has been shown as two." *No-Joint Concrete Pipe Co. v. Hanson*, 344 F.2d 13, 15 (9th Cir. 1965). SMC has nevertheless attempted to avoid infringement of the Stoll patent by using only one sealing ring in some of its rodless cylinders rather than more than one. It is clear that the unit will be sealed, thereby allowing the piston to be moved by pneumatic pressure, regardless of the number of sealing rings used. It is also clear that one sealing ring will provide wiping action as described in the Stoll patent. It will accordingly be shown at trial that SMC's units are functionally equivalent to the patented Festo construction.

The use of two seals may provide certain additional advantages over one, such as more efficient wiping. The court addressed the same situation in the *No-*

* * *

UNITED STATES DISTRICT COURT
DISTRICT OF MASSACHUSETTS

FESTO CORPORATION, Plaintiff and Counterclaim Defendant, v. SHOKETSU KINZOKU KOGYO KABUSHIKI CO. LTD., a/k/a SMC CORPORATION and SMC PNEUMATICS, INC. Defendants and Counterclaim Plaintiffs.	Civil Action No. 88-1814-MA BBO #549137

PLAINTIFF FESTO CORPORATION'S
TRIAL BRIEF

* * *

alloy materials. Festo will also provide evidence that the sleeve material of the SMC device performs substantially the same function, in substantially the same way to achieve substantially the same result as the claimed invention. More specifically. the Stoll invention is directed to wiping, guiding and sealing, i.e. wiping dirt and impurities away from the magnets of the piston and driven member, guiding the piston and driven member inside and outside the cylinder tube, respectively, and sealing the piston to prevent "blow-by". Accordingly, the material used for the sleeve which encircles the outer

magnet arrangement is inconsequential to the Stoll invention of wiping, guiding and sealing. Festo will show at trial that the specific arrangement of the guide rings and seals are not affected by the driven member sleeve material.

A function attributable to the sleeve material in the specification of the Stoll patent will be shown by Festo to not be part of the claimed invention; however, even if one were to include the function of keeping magnetic leakage fields in the vicinity of the driven member to a minimum, Festo will prove at trial that the aluminum alloy sleeve material will function in substantially the same way to achieve substantially the same result as a magnetizable sleeve material.

The jury will thereby be well equipped to determine whether SMC has made a change of such substance as

* * *

UNITED STATES DISTRICT COURT
DISTRICT OF MASSACHUSETTS

FESTO CORPORATION, Plaintiff, v. SHOKETSU KINZOKU KOGYO KABUSHIKI CO., LTD., a/k/a SMC CORPORATION and SMC PNEUMATICS, INC., Defendants.	CIVIL ACTION NO. 88-1814-PBS

ORDER RE: PRETRIAL MOTIONS

July 11, 1994

Saris, U.S.D.J.

On February 3, 1994, this Court heard oral argument on the following motions: The motions by SMC Corporation and SMC Pneumatics, Inc. (collectively "SMC") for summary judgment on non-infringement of the Stoll Patent, non-infringement of the Carroll Patent, and invalidity of the Stoll Patent[1]; and the motions by Festo Corporation ("Festo") for summary judgment and for a

[1] Prior to the Master's Hearing, SMC filed motions for summary judgment on non-infringement of the Stoll Patent, non-infringement of the Stoll and Carroll Patents by the one seal SMC rodless cylinder, and invalidity of the Stoll Patent. Following the Master's Hearing, SMC filed a motion for summary judgment and a directed verdict on non-infringement of the Stoll Patent.

directed verdict on infringement of the Carroll patent, validity of the Carroll patent, infringement of the Stoll patent, and validity of the Stoll patent. As discussed in court that day, and as explained in a Procedural Order issued on February 18, 1994, all motions for summary judgment were denied, with the exception of the motions concerning infringement of the Reexamined Carroll patent. After additional briefing on that issue, this Court now orders that Festo's and SMC's motions are each allowed and denied in part. This opinion also addresses the use of the Master's Report ("Report") at trial, and assumes familiarity with that report. The Court also explains the reasons for denial of the motions concerning infringement of the Stoll Patent under the doctrine of equivalents, which SMC urged the court to reconsider.

1. Master's Report

On May 21, 1992, pursuant to Fed. R. Civ. P. 53(e)(3), Judge Mazzone referred this case to Special Master Herbert F. Schwartz, Esq. for the purpose of considering all claims presented by the parties. In the Order of Reference, Judge Mazzone explained that the appointment of a special master was warranted because "[n]ot only are the claims complex, but the history of this litigation, the voluminous record, and the contentions of the parties promise that this case will require an inordinate amount of judicial time and resources at a time when this Court has four pending vacancies and my own schedule is severely taxed."

SMC filed a limited objection to the reference, primarily directed to the contention that the Master's

authority be no broader than that provided under Fed. R. Civ. P. 53(e). Hearings on the issues of infringement, invalidity and enforceability of the reexamined Carroll and Stoll patents were held before the special master on September 14-21 and hearings on damages were held on October 19-22 and on November 9, 1992. The Master issued his report on April 27, 1993. Both sides filed objections in a timely fashion.

Fed. R. Civ. P. 53 (b) provides that a reference to a master shall be "the exception and not the rule." "In actions to be tried by a jury, a reference shall be made only when the issues are complicated. . . . " *Id.* In an action to be tried by a jury, the master's "findings upon the issues submitted to the master are admissible as evidence of the matters found and may be read to the jury, subject to the ruling of the court upon any objections in point of law which may be made to the report." Fed. R. Civ. P. 53(e)(3).

"[T]he court has the power to appoint masters without the consent of the parties." *Constant* v. *Advanced Micro-Devices Inc.*, 848 F.2d 1560, 1566 (Fed. Cir.) ("*Constant*"), *cert. denied*, 488 U.S. 892 (1988). "Reference of issues to a master, even compulsory reference, does not violate the 7th Amendment right to trial by a jury to which a master's findings may be read under Rule 53(e)(3)." *Id.* (citing *Crateo, Inc.* v. *Intermark, Inc.*, 536 F.2d 862, 868 (9th Cir.), *cert. denied*, 429 U.S. 896 (1976)). *See also Ex parte Peterson*, 253 U.S. 300, 312 (1920).

"Where complicated issues of patent law are involved, the appointment of an experienced patent attorney is quite appropriate." *Constant*, 848 F.2d at 1567.

"Masters can properly aid the court in evaluating issues of patent validity and infringement in the context of motions for summary judgment, and have often done so." *Id.* at 1566. *Cf. International Nickel Co.* v. *Ford Motor Co.*, 166 F. Supp. 551, 553 (S.D.N.Y. 1958) (reference to master in highly technical patent case). "Masters have been employed by courts (under Fed. R. Civ. P. 53 (e)(3)) to explain technology to the jury or make findings on specific issues which are then read to the jury." *Structural Rubber Products Co.* v. *Park Rubber Co.*, 749 F.2d 707, 720 (Fed. Cir. 1984).

In jury cases, some courts have held that the master's findings constitute prima facie evidence to be submitted to the jury for its consideration. *Coyner* v. *United States*, 103 F.2d 629, 634-35 (7th Cir. 1939). *See generally* Irving R. Kaufman, *Masters in the Federal Courts: Rule 53*, 58 Columbia L. Rev. 452, 460 (1958).

SMC has filed a motion in limine objecting to submission of the master's fact findings to the jury. This court has determined that the master's report will be submitted to the jury because of the complexity of the issues and technology involving magnetically coupled rodless cylinders and two different patents. Due to the length of the report, the number of issues, and the complexity of the technology, the Court will allow the jury to read the report by themselves rather than have the report read orally to them. However, in order to ensure that the master's report not receive undue weight, it will not remain with the jurors while deliberating. The attorneys have conferred and agreed to sanitize the report to delete contentions of the parties, and issues which the court has ruled on as a matter of law.All disputes were resolved by

the court. Finally, the Court will not instruct the jury that the master's report is "prima facie" evidence, as that language is missing from Rule 53. Rather, the Court will instruct the jury that it may determine what weight, if any, to give the master's findings.

2. Infringement Under Doctrine of Equivalents of Stoll Patent Concerning Magnetizable Sleeve Limitation

Based on the analysis contained in the report concerning the magnetizable sleeve limitation in claim 1 of the Stoll patent, the master recommended that SMC's motion for summary judgment should be granted with respect to SMC's infringement of claims 1-3 and 5-7 of Stoll. SMC has moved that this Court adopt the master's recommendation with respect to non-infringement of the Stoll patent. Festo has moved for summary judgment and/or a directed verdict of infringement of the Stoll patent.

"In order to determine a question of patent infringement, a district court must (1) determine as a matter of law the scope and meaning of the claims at issue and (2) determine as a factual matter whether the properly construed claims encompass or 'read on' the accused device." *Vaupel Textilmaschinen* v. *Meccanica Euro Italia*, 944 F.2d 870, 879 (Fed. Cir. 1991) ("*Vaupel*"). *See also ZMI Corp.* v. *Cardiac Resuscitator Corp.*, 844 F.2d 1576, 1578 (Fed. Cir. 1988). "To ascertain the meaning of claims, [the court considers] three sources: the claims, the specification, and the prosecution history." *Unique Concepts, Inc.* v. *Brown*, 939 F.2d 1558, 1561 (Fed. Cir. 1991) ("*Unique*"). To

constitute an infringement, the accused device must contain each and every limitation of the claim or its substantial equivalent. *Vaupel*, 944 F.2d at 879. "An equivalent must be found for every limitation of the claim somewhere in an accused device, but not necessarily in a corresponding component, although that is generally the case." *Corning Glass Works* v. *Sumitomo Elec. U.S.A., Inc.*, 868 F.2d 1251, 1259 (Fed. Cir. 1989) (adding negative dopant to the cladding is equivalent to adding positive dopant to the core in the context of the claimed invention).

The court agrees with the conclusion of the Master that "when properly construed the Stoll claims cannot be read to cover the non-magnetizable sleeves used in the SMC rodless cylinders." Report, pp. 47-50, 68. Thus, there is no literal infringement as a matter of law. Festo does not dispute this ruling.

However, the court disagrees that summary judgment can be granted with respect to the claim of infringement by equivalents. A finding of infringement by equivalents requires a determination whether the accused device performs substantially the same function in substantially the same way to achieve substantially the same result. *Unique*, 939 F.2d at 1564. *See generally Graver Tank & Mfg. Co.. Inc.* v. *Linde Air Prods. Co.*, 339 U.S. 605, 608 (1950). "This equitable doctrine evolved from a balancing of competing policies, each of which supports the Constitutional purpose of promoting the 'useful arts.' " *London* v. *Carson Pirie Scott & Co.*, 946 F.2d 1534, 1538 (Fed. Cir. 1991) ("*London*") (citing U.S. Const. art. I, § 8, cl. 8).

> On the one hand claims must be 'particular' and 'distinct,' as required by 35 U.S.C. § 112, so that the public has fair notice of what the patentee and the Patent Trademark office have agreed constitute the metes and bounds of the claimed invention. . . . On the other hand, the patentee should not be deprived of the benefits of his patent by competitors who appropriate the essence of an invention while barely avoiding the literal language of the claims. . . . Thus, where an infringer, instead of inventing around a patent by making a substantial change, merely makes an insubstantial change, essentially misappropriating or even 'stealing' the patented invention, infringement may lie under the doctrine of equivalents. Application of the doctrine of equivalents is the exception, however, not the rule. . . .

Id. (citations omitted).

"The essence of prosecution history estoppel is that a patentee should not be able to obtain, through the doctrine of equivalents, coverage of subject matter that was relinquished during prosecution *to procure issuance of the patent.*" *Hoganas AB* v. *Dresser Indus., Inc.*, 9 F.3d 948, 951-52 (Fed. Cir. 1993) (*"Hoganas"*) (emphasis added). "The legal standard for determining what subject matter was relinquished is an objective one, measured from the vantage point of what a competitor was reasonably entitled to conclude, from the prosecution history, that the applicant gave up to procure issuance of the patent." *Id.* at 952.

"The doctrine of prosecution history estoppel bars 'a patentee from enforcing its claims against otherwise legally equivalent structures if those structures were

excluded by claim limitations added in order to avoid prior art.' " *Vaupel*, 944 F.2d at 882 (quoting *Mannesmann Demag Corp.* v. *Engineered Metal Prods. Co., Inc.*, 793 F.2d 1279, 1284 (Fed. Cir. 1986)). "In determining whether prosecution history estoppel applies because of a change in claim language during prosecution, the court must consider not only what was changed, but the *reason* for such change." *Id.* (emphasis in original) (because the record does not indicate that the limitation was added to avoid prior art, there was no estoppel to finding infringement by equivalents). "The scope of estoppel must be determined in light of the prior art that occasioned the change, as well as representations made to the patent examiner as to the reason for change." *Sun Studs, Inc,* v. *ATA Equipment Leasing, Inc.*, 872 F.2d 978, 987 (Fed. Cir. 1989) (no estoppel where the discussion of patentability before the PTO was unrelated to the description of the geometric shape) (*"Sun Studs"*), *overruled on other grounds by A.C. Aukerman Co.*, v. *R.L. Chaides Const. Co.*, 960 F.d 1020, 1038-39 (Fed. Cir. 1992). "[E]stoppel is not automatic whenever a claim is cancelled. . . . " *Id.* at 987. Prosecution history estoppel is ordinarily a question of law.

SMC vigorously argues that this Court should adopt the master's recommendation that Festo is estopped under the doctrine of prosecution history estoppel from claiming that it is entitled to a range of equivalents which would erase "meaningful structural and functional limitations of the claim on which the public is entitled to rely in avoiding infringement." *Hoganas*, 9 F.3d at 954 (quoting *Perkin-Elmer Corp.* v. *Westinghouse Elec. Corp.*, 822 F.2d 1528, 1532 (Fed. Cir. 1987)). In *Hoganas*, the court found

prosecution history estoppel where: the examiner during prosecution issued an office action rejecting claims for obviousness; the claimant distinguished the claims so as to relinquish coverage of capillary-sized fibers; and the examiner subsequently allowed the claims based on this distinction. The court held: "In our view, a reasonable competitor could have concluded, from a reading of the prosecution history, that the examiner relied on this distinction in allowing the claims, and thus, that Hoganas had given up coverage of the subject matter incorporating this distinction." *Hoganas*, 9 F.3d at 953.

Here, in the First Office Action, the examiner rejected all claims under 35 U.S.C. § 112 par. 1, which provides: "The specification shall contain a written description of the invention, and of the manner and process of making and using it, in such full, clear, concise, and exact terms as to enable any person skilled in the art to which it pertains, or with which it is most nearly connected, to make and use the same, and shall set forth the best mode contemplated by the inventor of carrying out his invention." The examiner commented: "Exact method of operation unclear. Is device a true motor or magnetic clutch." Claims 4-12 were also rejected under 35 U.S.C. § 112 for being improperly multiply dependent. Report 37. They were not rejected for obviousness under 35 U.S.C. § 103.

The initial claim 1 did not limit the sleeve of the driven member to being constructed of a magnetizable material. Claim 8, which was dependent from claim 1, had such a limitation. Report 31. In response to this first office action, Stoll cancelled independent claim 1 and substituted a completely new independent claim which

required that the driven member have a sleeve constructed of a magnetizable material. Report 32.

Although the examiner identified certain "cited references believed pertinent," there is nothing in the record or the report to indicate that the limitation of a magnetizable sleeve was necessary to distinguish the claimed invention over prior art. Further, there is nothing in the record or the report to suggest that the limitation of a sleeve of magnetizable material was necessary to meet the requirements of specification under 35 U.S.C. § 112. Indeed, the reason why the newly substituted independent claim has the limitation that the sleeve be made of magnetizable material is a mystery, as nothing seems to turn on its composition for purpose of procuring the patent. At the very least, it is a question of fact. *Sun Stud*, 872 F.2d at 987. This Court is not persuaded by SMC's reliance on *Haynes Int'l., Inc.* v. *Jessop Steel Co.*, 8 F.3d 1573, 1577-78 (Fed. Cir. 1993) ("*Haynes*"), in which two claims reciting a relatively broad range of chromium content were abandoned, and a third claim with a more specific chromium content was retained. In *Haynes*, unlike the present case, it was clear from the prosecution history "that chromium content was the principal distinction between the claimed subject matter and the prior art, and this was the primary area of dialogue between Cabot and the PTO." *Id.* at 1578. Accordingly, in light of the circumstances of the present record, this court declines to adopt the recommendation of the master that the claim of infringement by equivalents is barred under the doctrine of prosecution history estoppel.

In addition, with respect to equivalency Festo has presented expert testimony of Dr. Robert Wolf and of Dr.

Stoll to support its claim of infringement under the doctrine of equivalents. Festo argues that SMC has produced no evidence to dispute the testimony of Wolf and Stoll that magnetizable and non-magnetizable sleeves operate in substantially the same manner. However, the patent itself states that if the driven assembly is provided with a sleeve made of magnetizable material, "magnetic leakage fields in the vicinity of the driven assembly can be kept to a minimum. In this way, undesirable breaking forces, which would otherwise be generated while piston and driven assembly pass magnetizable machine components, are avoided." Record 48. This language in the specification, together with the prosecution history, creates a disputed issue of fact appropriate for resolution by a jury under the function/way/result test. *Unique*, 939 F.2d at 1564 (even where there was no literal infringement as a result of plain language of claim and prosecution history, the court examined expert testimony in evaluating whether there was infringement by equivalents). Accordingly, both motions are denied.

3. Literal Infringement of the Reexamined Carroll Patent

Festo has moved for summary judgment on its claim of infringement with respect to the reexamined Carroll patent. Claim 9 of the reexamined Carroll patent requires "a pair of cushion members formed of resilient material, the cushion members being situated near opposite axial ends of the central mounting member to help prevent damage to the piston when the piston contacts an axial end of the cylinder. . . . "

A. 6, 10 and 15 mm slider pistons

The 6, 10 and 15 mm slider pistons have no cushions and Festo does not contend that they infringe.

B. 25, 32, and 40 mm slider pistons

SMC contends that the cushions in the 25, 32 and 40 mm slider pistons cannot prevent damage by making contact with the end plates, because a bolt protrudes from the piston such that the end plate will make contact with the bolt rather than the cushion. (Testimony of Dr. Blanco, Tr. 1800). Festo has neither put forth any evidence to dispute the contention nor pressed the issue in its briefs. Accordingly, SMC's motion for summary judgment on the claim of literal infringement will be granted.

C. Basic Pistons

As to the basic pistons, SMC contends that "in normal operation," their cushions do not "prevent damage to the piston" since they do not make contact with the end plate. This is because "in normal operation" the piston is stopped by stopping the load rather than stopping the load by stopping the piston. The court agrees with the conclusion of the master that the language of claim 9 of the reexamined Carroll patent does not distinguish between situations where contact with the axial end of the cylinder is the normal result of the completion of a stroke and where it comes into play only in the case of decoupling. Report 20-22. Accordingly, the court grant's Festo's motion for summary judgment with respect to the claim of literal infringement of claims 5, 6 and 9 of the

reexamined Carroll patent on the basic pistons with two seals and cushions.

4. Infringement Under Doctrine of Equivalents of Reexamined Carroll and Stoll Patents Concerning Seals

SMC has moved for summary judgment on non-infringement of the reexamined Carroll patent and the Stoll patent based on its use of one seal rodless cylinders, instead of two. Festo has also moved for summary judgment on their claim of infringement by equivalents. Since the Carroll and Stoll patents specifically recite two seals, there is no dispute that the one seal basic and the one seal slider SMC rodless cylinders do not literally infringe.

Claim 1 of the Stoll patent states *inter alia*:

> Said piston further including plural guide ring means encircling said piston body and slidingly engaging said internal wall and first sealing rings located axially outside said guide rings for wiping said internal wall as said piston moves along said tube to thereby cause any impurities that may be present in said tube to be pushed along said tube so that said first annular magnets will be free of interference from said impurities.

Claim 9 of the reexamined Carroll patent specifically defines "a pair of resilient sealing rings situated near opposite axial ends of the central mounting member and engaging the cylinder to provide a fluid-tight seal therewith."

SMC argues that use of only one seal allows dirt to enter the piston chamber and is therefore not equivalent to two seals. The master rejected the argument as "flawed" as applied to the reexamined Carroll patent because it is based on the meaning and function of the sealing rings as described in the Stoll patent, not in the Carroll patent. Report 24. Rather, the Master found that under the Carroll patent: "The seals create a fluid-tight seal against the pressure medium, enabling the piston to be pushed by its force. This results in the piston being efficiently moved by the pressure medium without "blow-by" or air getting around the seals." Report 24. Festo has presented undisputed evidence that for this purpose the one seal in the SMC device performs substantially the same function and achieves substantially the same result in substantially the same way as two seals.

The only evidence which SMC has produced to dispute the claim of infringement by equivalents is statements made by Festo in the context of prosecution of the Stoll patent. In particular, there is a statement by Dr. Stoll that two seals are necessary under the Stoll patent because without two sealing rings, dirt attracted by the magnet will enter the side without the sealing ring. This evidence concerning dirt and impurities does not bear on the meaning and function of the sealing rings as described in the reexamined Carroll patent.

Accordingly, the Court allows Festo's motion for summary judgment that the one seal SMC basic cylinders infringe claims 5, 6 and 9 of the reexamined Carroll patent under the doctrine of equivalents. However, the Court denies Festo's motion for summary judgment that the one seal SMC basic cylinders infringe claim 1 of the

Stoll patent under the doctrine of equivalents. Considering the above statement by Dr. Stoll on the importance of two seals, as well as conflicting testimony from Dr. Wolf and Dr. Stoll at the master's hearing, there is a genuine issue of material fact as to whether one seal functions substantially the same way as two seals in eliminating interference from impurities.

ORDER

For the foregoing reasons, the Court hereby **ORDERS** as follows:

1. SMC is granted summary judgment on non-infringement of the reexamined Carroll patent by the 6, 10 and 15 mm cushionless pistons;

2. SMC is granted summary judgment on non-infringement of the reexamined Carroll patent by the 25, 32, and 40 mm slider pistons with bolts;

3. Festo is granted summary judgment on the infringement of the reexamined Carroll patent by the SMC basic pistons with two seals and two cushions;

4. Festo is granted summary judgment on the infringement of the reexamined Carroll patent by the SMC one-seal rodless cylinders.

5. All other motions for summary judgment are **DENIED** for the reasons stated above and in Court on February 3, 1994.

/s/ Patti B. Saris
PATTI B. SARIS
United States District Judge

TELEFAX

FAX: 6014

TO: Mr. Loesener

FROM: Ralf Haller
FESTO-USA
Fax # 516-435-8026

RE: INK AGITATOR

DATE: Nov. 29, 1988

Achim,

Enclosed is a sketch of ink agitator as discussed on the telephone earlier. As you can see on the agitator sub-assembly, the pinion is prevented from moving off the rack by means of two counter rollers. Also, at the bottom there are 4 rollers going along a guide rail virtually preventing any misalignment of the sub-assembly.

The whole sub-assembly slots into a bracket mounted on the mounting face of the DGO. In addition, the DGO has got play at both ends (about 1 mm) both lateral as well as axial.

The whole agitator is a device sold by our customer to be used to agitate ink, i.e. to prevent skin forming on the surface. Viscosity varies from ink to ink but never approaches that of honey.

As you can see, the possible sideload from the lever on the agitator is taken care of by the 4 rollers at the bottom. Whatever loads are left are minimal and the DGO should be able to cope easily.

The design here incorporates mechanical improvements that I have suggested to the customer during a visit of mine some 2-1/2 months ago. This visit became necessary after a sudden series of breakdowns after very short cycle life to which we could not give satisfactory explanations.

The customer accepted my suggestions and partly redesigned his product. To our embarrassment the situation is still as bad as ever, which we found out just now.

We have had alot of goodwill by the customer but obviously we are now under pressure with very little time and the competition falling over each other on the customer's door step. The account is worth to us $100 K + with a large part being DGO sales.

At this moment in time we have started to conduct tests with the customers device which they have put at our disposal.

Three sample cylinders that have failed in the field after less than 50 miles exhibit very bad seal wear as follows:

1) 2 areas radially opposed by 180 degrees on both seals

2) 3 areas at angles of 120 degrees on the circumference on both seals.

3) 3 areas at angles of 0, 120, and 180 degrees on the circumference.

We also received back an old DGO which we were told by the customer was typical for what they used to have and which at that point in time had done well in excess of 2 million cycles. The seals almost looked new (!!)

I appreciate that at the moment there is not a lot you can do for us but I need to gather as much information as I

can get and there is obviously an outside chance that you may be aware of similar problems elsewhere or you may have access to statistical data that could point in the right direction or that there may be minor but possibly important changes in the specs. or supplier, etc.

I personally still favor looking at an application specific problem, however, in that case we would still need to explain why the cylinders started to fail from a certain point onwards.

At this stage, if there is anything that you feel might be important to help us solve this problem I would appreciate if you let us know.

Best regards,

Ralf Haller

DEFENDANT'S EXHIBIT 66

MINUTES FROM ESS/FESTO MEETING
SEPTEMBER 13, 1988

PRESENT AT MEETING: Tim Epach, Purchasing/ Production Mgr/ESS
William Gardner, Engineering Mgr/ESS
Bernd Ruckdaeschel, Project Engr/ESS
Nancy Novak, Credit Mgr/ESS
Jonn Geragosian, Midwest Regional Mgr/FESTO
Mike Collins, Sales Representative/FESTO

J. Geragosian noted that Ken Hughes has been calling Festo in New York and Charlotte threatening lawsuits and harassing Festo personnel.

T. Epach stated that K. Hughes should not be talking with Festo at this point and should be getting all his information from ESS. He instructed J. Geragosian to have Festo personnel refer Hughes to ESS if he calls again.

J. Geragosian asked about the agitator patent situation; T. Epach explained our license agreement currently in force between ESS and Hughes.

T. Epach gave the background on the test cylinder which failed over the weekend and during last night. He stated that this is a major concern at this point, i.e. whether we can get one to work. He also pointed out that even if we have a cylinder which will work, Festo has so far not provided any data on how long they will last. He stated that we need this information in order to make warranty

decisions, as well as to advise our customers on the life expectancy. He stated that other cylinder manufacturers provide life expectancy ratings for their products.

J. Geragosian stated that Festo's test data shows a cylinder with a 25mm bore will last approximately 1800 miles/stroke, 1200 miles/stroke if run unlubricated. These tests were run with a load of 1/10 linear force at 6 bars pressure. He stated that cycle rates and speeds are major factors in life expectancy, and that you will generally see a 15-25% reduction in life when running on an unlubricated air supply. He noted, however, that no life expectancy claims can be made without extended testing in a particular application.

T. Epach stated that K. Hughes has told ESS that Festo claimed at one point that the cylinders will last indefinitely, but we cannot substantiate who made the statement, if it was made at all.

W. Gardner stated that the original cylinder received from Festo was run 2 million cycles, then cut down to check seals, which were found to be ok. But now, we are having tremendous problems with the cylinders in the field. The original spec called for "clean, dry air." Later, Festo stated that the cylinders were being overlubricated when assembled.

J. Geragosian stated there are two lubrication issues, one concerning the air supply and one concerning the cylinder. On the pre-lube of the piston and the yoke, Festo wants to monitor them carefully to prevent overlubing.

J. Geragosian requested data on which cylinders are failing. It was agreed this would be provided him in approximately two weeks, as it is being gathered now.

W. Gardner stated that one cylinder which was returned was on the press a maximum of 3 months, which calculated out to 115 miles. This cylinder has been sent to the New York office for evaluation.

B. Ruckdaeschel stated that the current speed for the cylinders is approximately 3 inches/second.

W. Gardner stated that the competition is running at approximately 22 seconds for a 40" cylinder, while our speed equates to approximately 15 seconds, which is not totally acceptable to customers.

T. Epach stated that the failures are running approximately 25%. As an example, he stated that a shipment of six cylinders will yield two cylinders which will fail, while the other four operate properly. It appears to be a question of tolerances.

J. Geragosian stated that ESS has an unusual application for the cylinder and that tolerances indeed may be affecting the performance. He also acknowledged that ESS is experiencing seal failures. He said he suspects the problem may be one of not getting a clean valve shift, that air is bleeding out.

T. Epach/B. Ruckdaeschel agreed with this statement.

B. Ruckdaeschel noted problems ESS is having with the flow control valve, and said it appears to be the check valve not operating properly at low cycle speeds; may not be seating correctly.

J. Geragosian will investigate the configuration of the seal.

B. Ruckdaeschel stated Festo may also want to look at a lower micron filter, as dirt appears to be building up around the needle valve, which may be contributing to the switch problems. ESS plans to test a filter of 5 microns.

J. Geragosian suggested taking apart one control valve.

T. Epach noted that we have not had a lot of switch and valve returns of late, and that ESS has worked through the component problems experienced early on. He stated that now we can switch cylinders on a unit and have them work.

J. Geragosian suggested building a fixture with different components to test the new cylinder; suggested using a different limit switch, because he thinks that the current one may not be getting a clear enough signal at the slow speed. He also stated that the new seal is actually a harder seal. This fixture was set up and completed on 9/13.

T. Epach stressed that ESS needs someone of authority from the Engineering Group, and perhaps a Production Manager with Festo to address the problem. He stated that ESS wants to know if we are trying to do the impossible and if we will continue to experience these problems. He noted that we did not see these cylinder problems during the first 6-8 months of production and thus we wonder what has been changed in the cylinder design.

J. Geragosian agreed to investigate the possibility of design changes and will look into getting Engineering personnel in to assist in solving the problem.

A copy of an ESS memo dated September 8, 1988 regarding recent tests run on cylinders was given to J. Geragosian.

J. Geragosian stated that a program could be set up to rebuild cylinders out of warranty, rather than forcing the customer to buy new ones. He also stated that the cylinder is not field repairable.

T. Epach stated that the seals are showing failure problems.

J. Geragosian stated he would like the unit with the new seals to be put on a new fixture with new switches. B. Ruckdaeschel stated that this would be completed today.*

B. Ruckdaeschel stated that he feels that low speeds will create problems, and that he was told by M. Collins that ESS is running at speeds not in the cylinder's design. He asked if this is indeed true. J. Geragosian stated that he could not definitively answer that question. B. Ruckdaeschel stated that he feels we are at the limit of the cylinder's design.

J. Geragosian agreed to become more involved with the situation to ensure it is resolved in a reasonable time. He also stated that he has been talking with Festo/West Germany about whether any changes were made to the cylinder, but not regarding the application. He stated that

---

*NOTE: The test fixture was completed on 9/13/88; the unit failed on 9/14/88.

we need to concentrate on the design of the agitator as a whole in order to resolve the problem.

The test cylinder was then reviewed in the Production area.

9/13/88nrn

UNITED STATES DISTRICT COURT
DISTRICT OF MASSACHUSETTS

FESTO CORPORATION,	:	
Plaintiff and Counterclaim Defendant	:	Civil Action No. 88-1814-PBS
V.	:	
SHOKETSU KINZOKU KOGYO KABUSHIKI CO. LTD., a/k/a SMC CORPORATION and SMC PNEUMATICS, INC.,	:	
Defendants and Counterclaim Plaintiffs	:	

Courtroom No. 6
Federal Building
Boston, MA 02109
9:00 a.m., Wednesday
July 6, 1994

Before: THE HONORABLE PATTI B. SARIS, District Judge and a Jury

Second Day of Trial

* * *

[2-19] THE COURT: Right, not for the truth of it. It's just for the marketing techniques that they use.

Go ahead.

(Plaintiff's Exhibit No. 109, Press Release: "New DGO . . . ," received in evidence.)

A. Yes, Exhibition 109 is the typical press release which we send to the magazines and to some of our distributors and employers as introducing the product into the market. Direct mail campaigns, et cetera.

Q. Now, upon introduction of this product, the DGO line, how were your marketing plans directed with regard to this product as opposed to other products of the company?

A. Well, when you come into a market which is completely established as a newcomer, initially we established this Highlights catalog. And it is very difficult to penetrate a new market if you haven't got anything to offer what is not already on the market.

DGO is an innovative product, was a pacesetter for us and was a great door opener when we visited customers. Engineers immediately looked at this. They never saw anything like it, that magnets could be used in a such a configuration, and the features offered great potential and immediately it was a great conversation piece. And we could not only with this product sell this product itself –

[2-20] MR. NEUSTADT: Objection, your Honor. We're again deviating from the question-and-answer format.

THE COURT: Yes. What's the next question?

Q. Mr. Saalbach, has the product sold successfully?

A. The product has been successfully sold until – had continued growth of one hundred to a hundred fifty to 200 percent growth every year until approximately 1988 when it flattened out, and the sales have stagnated equal since then.

Q. And why have they flattened out?

A. Because of the unfair competitiveness in introducing a product by SMC in the market.

Q. Now, is the DGO protected by patents?

A. The DGO has two patents, one patent developed by the principal owner of our company, Dr. Kurt Stoll, and the second patent which was purchased by the parent company from an inventor in order to eliminate any confrontation in the market at that time.

MR. HOFFMANN: Your Honor, I would like to offer into evidence a certified copy of the Stoll Patent, which is U.S. Patent Number 4,354,125. I show it to the –

THE COURT: What number is that?

MR. HOFFMANN: Plaintiff's Exhibit 15.

MR. NEUSTADT: No objection, your Honor.

THE COURT: All right, fine.

* * *

[2-90] THE WITNESS: Okay.

Q. Could you explain the application you're referring to down in Disney World?

A. Yeah. In Disney World we have several applications, but two distinctive ones which I think everyone would identify.

This is Thunder Mountain where this train comes down thrashing this mountain and it's real frightening and you see this waterfall all of a sudden appearing in front of you, and then this big rock falling down. And the rock is actually moving through the water because of the feature of the cylinder. Because it's completely leak proof, it can be used within water. It guides this rock, invisible to the spectator of course, by this device.

The same thing with Twenty Thousand Leagues Under the Sea where you have different exhibits moving as a submarine moves along. Here, again, the same device, the Festo device underneath water, because there is no leakage so you can use it exactly that way.

Q. Are there any other advantages of the magnetically coupled rodless cylinder?

A. Another advantage is because the yoke is only magnetically coupled and not mechanically coupled, it is loose. Consequently, it rotates freely around the stainless steel tube.

* * *

UNITED STATES DISTRICT COURT
DISTRICT OF MASSACHUSETTS

FESTO CORPORATION, Plaintiff and Counterclaim Defendant V. SHOKETSU KINZOKU KOGYO KABUSHIKI CO. LTD., a/k/a SMC CORPORATION and SMC PNEUMATICS, INC., Defendants and Counterclaim Plaintiffs	:	Civil Action No. 88-1814-PBS

Courtroom No. 6
Federal Building
Boston, MA 02109
9:00 a.m., Thursday
July 7, 1994

Before: THE HONORABLE PATTI B. SARIS, District Judge and a Jury

Third Day of Trial

* * *

[3-67] development, was my main activities, production and technical sales, and my brother heads the commercial side.

Q. And have you personally made a number of developments over the years on your own?

A. I made more than a hundred different patents in Germany and worldwide Festo itself has about 600 patents.

Q. And you're talking about patents that cover your inventions?

A. Partly my inventions and partly covering inventions – and partly inventions from other engineers.

Q. Have you been the author of any publications?

A. Yes. The pneumatic field at that time was rather new, so it was very important to give know-how, to give application details to our customers, and that's why we had to be very active in marketing, marketing not only by catalog, price lists, but also by books and by illustrations in trade magazines.

I was the co-author of five different books and about 120 different prints in trade magazines. The books are called in the pneumatic field, first one, Introduction to Pneumatics; second one, Application of Pneumatics; the third one, Pneumatics in the Woodworking Industry; number four, Pneumatics in the Packaging Industry; and the fifth one, Cutting Cost With the Help of Pneumatics.

Besides these books, we have our own trade [3-68] magazine which we send out to 40,000 different customers in 50 countries, and this trade magazine comes

out every four months and I am the publisher of it. It's called Pneumatic Tips.

Q. Now, in regard to the books, what's the scope of publication on the books, the distribution?

A. The first book, the oldest one, called Introduction to Pneumatics, passed the ninth edition just last week, and it's printed in 14 different languages so we can utilize it as a sales help in our 40 different countries, Festo countries.

Q. Have you had anything to do with developing an understanding of terminology in the pneumatics industry?

A. Yes, we found a need on the market that there is no dictionary about special terms in the fluid power industry, and I got a little bit angry about it and started the first 50 pages myself and now today it's on the open – you know, the book shops or whatever, an English/German, German/English dictionary about fluid power, expressions for this industry, and also for schools and universities.

MR. HOFFMANN: Your Honor, I'd like to mark for identification Plaintiff's Exhibit 610.

THE CLERK: Award marked as Plaintiff's Exhibit 610 for identification.

THE COURT: Well, we don't need it for [3-69] identification. Let's not do that. Any objection?

MR. NEUSTADT: Your Honor, I was not provided with the translation of this, so I'm hopeful that someone will tell me what's said here. I have no idea, so

I'd like to wait until after the witness testifies before I state an objection or not.

THE COURT: Well, I don't want – all right, but we're normally not going through the ID route, is that true –

MR. HOFFMANN: Okay.

THE COURT: – because that takes too much court time.

THE CLERK: So I can –

THE COURT: You will, because when it's translated – although that looks like Latin, not German. Is it?

THE WITNESS: That's German. But we can leave it out if you want.

THE CLERK: 610 marked for ID.

(Plaintiff's Exhibit No. 610, Diesel award, marked for identification.)

BY MR. HOFFMANN:

Q. Dr. Stoll, I'm going to show you Exhibit 610 and maybe you can explain what this is and what it says for the Court.

A. I received a gold medal for making inventions. It's [3-70] called the Diesel. Diesel is the diesel engine. And on account of Mr. Diesel a few hundred years ago, the German patent office is handing out three to four medals per year for extraordinary inventions in various fields.

Q. And is this an award that you received?

A. Yes.

Q. And when did you receive it?

A. It was last year.

THE COURT: Wait a minute. So it's not in yet.

MR. HOFFMANN: Okay. I want to offer it in evidence.

MR. NEUSTADT: No objection, your Honor.

THE COURT: Fine.

(Plaintiff's Exhibit No. 610 marked in evidence.)

MR. HOFFMANN: Your Honor, I have two others, award-type documents.

THE COURT: Just show it to him, have him identify it and we'll mark it as an exhibit. Why don't you show it first to Mr. Neustadt.

MR. HOFFMANN: Fine. He's seen them already. Exhibits 592 and 593 shown to the witness.

A. The first one is an honorary doctor's degree from the Technical University in Vienna, Austria, and the second one is a medal received from the German government.

[3-71] Q. And the award from the Technical University in Austria, what is that for?

A. For our – for my achievements in the technical field of fluid power.

Q. And the other award relating to the German government, what is that for?

A. That's also for the same achievements.

MR. HOFFMANN: Your Honor, I'd like to move Mr. Stoll's awards into evidence.

MR. NEUSTADT: No objection.

THE CLERK: University award marked as Plaintiff's Exhibit Number 592, and German Federal Service Cross award marked as Plaintiff's Exhibit Number 593.

(Plaintiff's Exhibit Number 592 marked in evidence.)
(Plaintiff's Exhibit Number 593 marked in evidence.)

BY MR. HOFFMANN:

Q. Dr. Stoll, are you a member of any organizations?

A. Here in the U.S.A. you have a National Fluid Power Association where most of the manufacturers are combined. We have a similar association called VDMA with the same function in Germany, and I was sitting on the board of directors up to last year for the last 15 years.

Q. Are you a member of any other technical organizations?

A. German Engineering Society, VDI, I'm also a member and guest speaker.

[3-72] Q. Now, Dr. Stoll, in the years that you've been with the company since 1957, have your responsibilities grown?

A. At the very beginning where we were a rather small group, I had many more fields of activities as today,

where today I'm concentrating more on technique and organization only.

Q. Is there still a portion of your time involved in the development of new products?

A. I would say at least half of the time is spent for new inventions. Festo is known to bring on to the Hanover exhibition each year at least 30 or 40 inventions.

Q. So since you've been with the company, you've been heavily involved in the development of products, is that correct?

A. Yes.

Q. Now, Dr. Stoll, I'm going to show you a copy of the patent in suit, Plaintiff's Exhibit 15. Do you recognize this patent?

A. Yes.

Q. Is this a patent that covers an invention of yours?

A. Yes.

Q. Could you give us some idea as to how you first became involved with the technology that resulted in this patent invention?

A. Here we are speaking of a linear drive, linear motor [3-73] driven with compressed air.

When we started in the pneumatic field and visiting customers with our first products, we found differently – a need on the market side not only for short-stroke, medium-stroke, but also for long-stroke cylinders, long-stroke in the sense of ten-foot and going even more up to 50-foot. This –

Q. What time period are we talking about?

A. Around in the sixties. There was nothing on the market which could go to such long strokes and I was really tempted to do something in that field. I was looking around what kind of functions could be – could be used for this – for this solution.

And you all know about the mail chute which is also pneumatically driven. You have a tube and inside a capsule which moves back and forward by air pressure, but this kind of application has a lot of limitations, mainly weight and also in volume.

So the basic idea was, why not take a load inside the capsule where you want to transport something, mail or whatever, why not take it outside the tube and take the tube only as a driving means and the load outside of the tube.

So there was your basic idea of the first linear cylinder. And the question came: How can we transform, transmit the interior force, the interior driving energy, to [3-74] the outside, to the load? And from physics we know what we could use a magnetic coupling. If I put a magnet inside and a magnet outside, have a carriage inside, have a carriage outside mounted on rollers, then I could prove that with this prototype that the idea was correct, was working.

Q. Were you aware of anything like that at the time?

A. Pardon?

Q. Were you aware of anything like that at the time?

A. No.

Q. So did you go about trying out this idea?

A. Yes, I built a prototype with a long plastic tubing and used a carriage inside and a carriage outside connected or coupled with a permanent magnet.

Q. And did you actually build this in a room at Festo or how did you go about it?

A. Yes, in our workshop we had made it up and it worked.

Q. Now, are we still talking about 1960's, is that correct?

A. Correct.

Q. Now, when you tried out your idea in this nature, the magnetic coupling in a tube with the carrier on the outside, what did you do when you built it and observed it? Did you take any action?

A. The first action was to apply for a Petty patent in Germany, which we received, to cover the basic idea.

* * *

[3-90] worked, what didn't.

A. We tried on the outside, we tried various material where it's hardness, soft-hard, even up to metal and we found that a semihard wiper action was giving us the best solution for wiping as well as for guiding the outer magnets.

On the inside, we first started to make a soft seal only without the guide. But then the soft seal was bearing down so fast on account of the eccentric action, on account of friction, that I mentioned before, so that the

only solution was to split the two functions, which is leakage and which is a way of – friction, to split the two functions also in two different materials.

MR. HOFFMANN: Maybe it would be helpful if you come over here if it's all right, your Honor, because he's talking about a vacuum as to where he's working in.

THE COURT: Yes.

Q. Now, you were just explaining that you're talking about on the inside. Do you mean the inner piston? Why don't you show us where that is.

A. The inner piston is here.

Q. You said you tried a soft ring first, a soft type of seal ring, is that correct?

A. Right.

Q. What happened when you tried that?

[3-91] A. The soft ring was bearing down relatively fast on account of the eccentric motion.

THE COURT: You know, this is a problem with this huge room. If you'd just standing so that your back isn't totally to me. I just couldn't hear at all what you had to say.

THE WITNESS: Should I stand on this side?

THE COURT: No. That way the jurors don't hear. Just like were you are right now would be fine.

THE WITNESS: Okay. The Piston is here, the soft seal is here, and when we took only a soft seal, then the soft seal would wear down very fast because we have too much friction for the two magnets.

Q. Does that relate to that radial force you were talking about?

A. Off the radial force, correct.

And then we found that we have to split the two functions of sealing against air and of guiding against friction to split these two different functions into two different material –

Q. First before you split it –

A. – a soft material for leakage and a hard material for wear, because both together would be a compromise and would not work.

Q. Okay. Now, before you tried to split them between a [3-92] softer and a harder material, did you try to just make the first ring harder?

A. Yes. We tried to make the first ring harder but then the sealing effect was limited. Because in the tubing we get unevenness, and the unevenness of the tubing of the surface, of the inside surface of the tubing you can seal only if you take a soft enough seal. With a hard seal you won't get a leakage free surface. So that's why we had to go back to a soft seal and the hard seal did not work for these two functions which are necessary to make it movable.

Q. So you said then you tried two different rings.

A. Two different rings and two different materials, a soft material for sealing and a hard material for guiding.

Q. And how did you take care of the dirt problem you were talking about?

A. The dirt problem we have inside and outside. Inside for the dirt which comes with the compressed air and also the dirt which could come from impurities from the steel tubing itself or from the magnet.

On the outside, we have no compressed air, so outside we have to fight only against the dirt from the outside. And that's why we could go here to a harder seal than on the inside because we don't –

THE COURT: Now that you've confused me, are we talking about a harder seal or a harder wiper? See these [3-93] terms are being used –

THE WITNESS: I just wanted to say a harder seal like inside we could not take. We could not take because outside we don't have any compressed air, so it doesn't have to be soft. We went right away to a harder wiper. And the harder wiper has two functions: A wiping function against the dirt and a guiding function against the friction. So by combining these two functions against dirt and friction, we are able to solve the outside portion, because outside we don't have the leakage problem.

Whereas, there are three problems inside. Leakage, friction and dirt we were able to solve with the principle which I mentioned, which is the soft seal and a separate hard seal – guide for guiding. Excuse me.

Did I make it clear?

Q. Right. So I think that's clear enough. And you're able to take care of the three internal problems, sealing, wiping, and guiding –

A. And guiding.

Q. – by the two sets of rings, is that correct?

A. And outside the two solutions.

Q. Okay.

THE COURT: Excuse me. Now, when you say "outside two solutions" –

THE WITNESS: Two functions.

[3-94] THE COURT: Two functions.

THE WITNESS: Two functions, solutions for the two problems; for the problem of wear and the problem of dirt. Outside we don't have the problem of leakage.

THE COURT: That's two wipers?

THE WITNESS: Pardon?

THE COURT: How many wipers?

THE WITNESS: One wiper for each side.

Q. Okay.

Did you eventually reach a satisfactory solution in this matter?

A. Yes.

Q. How long a period of time are we talking about that you tried these different things and materials and rings and solutions to come up with the answer?

A. That's a time consuming process because we wouldn't go to the market with any prototype which is not tested at least for a few million cycles or 10,000 kilometers. That means we go into a torture test so that

we can prove the quality before it goes to the customer. Otherwise, we could not be specified as the first European company by General Motors to become a supplier, so quality is quite a big issue for us.

It's not only a slogan or a nice pamphlet, but for this quality test it took a long time not only for this [3-95] product but for other products to come to the final solution.

Q. Why don't you go back to the stand. I think that will be adequate for that.

A. (Witness complied.)

Q. Did there come a point in time when you applied for a patent when you felt you had a unique design and applied for a patent?

A. After going through all of these details here and getting the final results from the torture test chamber, I found now we had made a big step, a big progress in the right direction and that should be covered by a patent because it's a real step forward for making a lineal motor with a magnetic coupling workable.

Q. And what was the essence of the invention that you felt you had that was in that application?

A. The essence was to solve the three problems, leakage, dirt and friction and the solution of it, the soft seal, the hard guide and the wiping and guiding function.

Q. Okay.

Is that the patent that we're involved with here the Plaintiff's Exhibit?

A. Yes. Claim No. 1 is concentrating on these three functions.

Q. Now, at the time, were you involved directly

* * *

[3-110] A. If I recollect it correctly, it was a little later.

Q. It was a little later?

A. Yes.

Q. Do you know how much later?

A. Not exactly.

Q. Today, it is your belief that radial is better than axial?

A. They both work. Technically they only have the price difference on account of the different production procedure.

Q. We're talking about your patent. Is there any other aspect of your patent that you feel is not necessary in the U. S. Patent?

A. I found a difference in Claim No. 1. I mean, in the main claim, because it reads different in the American Patent than in the seven other countries where we've also got the patent, which does not contain the mentioning of magnetizable sleeve. This wording is not mentioned in claim No. 1 in all other countries that we applied for the patent. Only in the American one this language came in.

Q. And what is your concern about that language?

A. Well, it's not of importance, the magnetizable sleeve, because it doesn't have to do anything with the function, what we mentioned before about friction, about leakage, about dirt. This shielding effect of the magnetizable sleeve is outside and is not even touching all the three [3-111] elements, wiping, guiding and sealing, what we mentioned before.

Q. So what you're saying, in the essence of the invention, you don't believe that the sleeve has any effect?

MR. NEUSTADT: Objection, leading.

THE COURT: Sustained.

A. It has a shielding effect, and we did not specify any material with our claim. We said only if you use.

Q. Okay. Let me go to that.

In the specification you suggest the use of a magnetizable sleeve as a possible portion of the structure, is that correct?

A. Correct.

Q. And why did you put that in?

A. The only function of the magnetizable sleeve is to keep the magnetic flux, the magnetic field inside the lineal motor. That was the only reason for putting it in.

Q. Now, have you found anything out about that feature over the years since you filed the application?

THE COURT: Can I back up for just one second?

THE WITNESS: Yes.

THE COURT: What do you mean by magnetizable sleeve?

THE WITNESS: Magnetizable sleeve, it can be any material which is magnetizable. We did not state any

* * *

[3-115] car. In both functions you need an outer shell.

MR. HOFFMANN: Okay.

THE WITNESS: And it doesn't matter whether we take steel, aluminum or whatsoever.

Q. Now, during times you gave testimony in this case. At one time we were talking about seal rings. How many seal rings do you have on a Festo cylinder?

A. If you take a rodded cylinder, we can work with one seal ring if it acts in both directions.

If you have more space, like here, on the DGO and magnetic tie, we prefer a sealing on each side outside the magnets. A soft seal on this side, a soft seal on this side.

Q. Could you come over again? Maybe it's best to work with your drawing.

A. (Witness complied.)

Q. When you're referring to the piston, you have a seal ring shown. What seal rings are on the piston? I'm talking about the magnetically coupled ones?

A. We have here the seal ring, and the seal rings have to get the air tightness, leakage zero from the compressed air here. So we can take two different kind of seal

rings. A, a seal ring which works from both directions, like an O ring, for instance, or a double seal, or, what we prefer is the single seal, which works only for this direction, or the [3-116] second one, for this direction (Indicating.)

So you can take either two seals or you can take one single seal. They both work, but the double seal has more life expectancy. Because a double seal has a self compensating effect. Even if it wears down, it still is pressed out by air pressure. Whereas, a single seal, either a round or any kind of figure, configuration, if it wears down, it does not have a self-compensate – a way of compensating for that.

So you either can take a single seal for the piston or – which is working in both directions, or you can take two seals which are working in one way and in one way.

THE COURT: And just to be clear, when you are saying two seals, you mean one seal on each end?

THE WITNESS: Right.

THE COURT: Not two seals on each end?

THE WITNESS: No, one seal here and one seal here, on each end.

Q. Now, if you use a two-way seal, which you can use, you said –

A. Right.

Q. – you'd need one on each end?

A. No, only one, only one.

Q. So when you were –

A. A one-way seal here, a one-way seal here, or a double [3-117] seal, two-way seal, whatever you call it, on one side only is sufficient.

Q. Now, you could put two, or four, or six or eight?

A. Any kind, but minimum of one.

Q. Okay.

Now, when you were talking about the Festo structure and using always two, were you talking about the two one-way seals?

A. Two one-way seals.

Q. Why does Festo prefer that in their commercial form?

A. Because you get a higher life expectancy and because you have a redundancy effect. If one breaks down, you still have the other.

Q. Okay.

Now, during that period of questioning, you were asked if there was only one sealing ring, you said dirt could get in. What did you mean by that?

A. The sealing ring acts for leakage, as well as for dirt. So if you would eliminate the sealing ring, you still have the guiding ring which take away the dirt or impurities.

Q. And that would keep it from the magnets?

A. Keep it from the magnets.

Q. Now, if you didn't have a guide ring in there, what would happen?

[3-118] A. Then you would get the dirt to the guide rings, if you don't have a seal ring. So the best mode is from – the minimum mode is two guide rings, one sealing ring and the best mode is two plus two.

Q. Okay.

MR. HOFFMANN: I'm trying to think if there is anything else we haven't covered. I don't think so. I think that's all I have.

THE COURT: Thank you.

Let me just ask you this, Mr. Neustadt. Do you need Dr. Stoll up here or would you rather have him back on the stand?

MR. NEUSTADT: Back on the stand.

THE COURT: Back on the stand. That's great. Why don't you move the chart back.

MR. NEUSTADT: Over there?

THE COURT: Yes.

While we're doing this, why don't you stand and stretch, a final stretch.

CROSS-EXAMINATION BY MR. NEUSTADT

Q. Dr. Stoll, can you see this all right?

A. (Nodes head.)

Q. This is a model that we made. This is the inner member or the piston, and this is the tube and this is what

* * *

UNITED STATES DISTRICT COURT
DISTRICT OF MASSACHUSETTS

FESTO CORPORATION, Plaintiff and Counterclaim Defendant V. SHOKETSU KINZOKU KOGYO KABUSHIKI CO. LTD., a/k/a SCM CORPORATION and SMC PNEUMATICS, INC., Defendants and Counterclaim Plaintiffs	Civil Action No. 88-1814-PBS

Courtroom No. 6
Federal Building
Boston, MA 02109
9:10 a.m., Friday
July 8, 1994

Before: THE HONORABLE PATTI B. SARIS, District Judge and a Jury

Fourth Day of Trial

* * *

[4-20] refers back to that statement there that we read before?

A. Right.

Q. So you do have responsibility for this, do you not?

A. Yes, but I don't have responsibility for claim number 1, which was totally changed. That's what I mentioned before. I don't feel responsible for claim number 1, which is completely different from claim number 1 in German, British/English, seven other countries, and claim number 1 in the American final, converted, improved, changed claim number 1. That was what I was referring to and not to the general description.

Q. Is there any way in which someone reading your patent would know that you do not feel that you're responsible for the language in the patent?

A. I'm responsible for the language in the patent if I know of, but for the changed version, this was not my – this I didn't come across to me. This was signed here. It says here: "Attorney signing the application letter." Here (indicating) are the page numbers, so and so, and what we mentioned just now. On the back page states my signature an don the front page it says: "Attorney signing the application" of the changed version where the number 1 claim, the important claim, was changed without my knowledge, That's what I meant. I cannot be held responsible for a change which I didn't know.

* * *

[4-57] you don't have to differentiate, and at that time we had only radial.

Q. Now, Dr. Stoll, we were discussing yesterday the difference between one seal and two seals?

A. Correct.

Q. Okay. And I think you told me that on all Festo rodless cylinders there are two seals.

A. Preferably.

Q. Pardon me?

Q. Preferably.

Q. Preferably. I'm not asking about preferably. I'm asking about a fact.

A. That's what I mentioned yesterday. You can do it with two or with three.

Q. Yes, but my question is how has Festo done it in the past with its commercial rodless cylinders.

A. We have done it with two single-acting, one-way seals.

Q. Always two, correct?

A. Correct.

Q. Okay. Now, you remember I referred –

A. What I showed you yesterday on my sketch where we were also doing it with one double-acting seal.

Q. Now, you remember the deposition testimony that I referred to previously with Mr. Kelly. This was in Mr. Hoffmann's office?

[4-58] A. I wouldn't recall the details.

Q. And do you remember he too asked you about the use of two seals?

A. Two soft seals.

Q. Well, we'll see. Let me show you what his question and your answer was. This is Mr. Kelly referring to your patent.

"Continuing down column one, line 49, there's reference to a piston which is slidable in the tubular part and then the disclosure goes on to say and which has sealing means at each end for wiping engagement with an internal surface of the tubular part. My question, Mr. Stoll, is, who suggested using two sealing means on the piston?"

And then your answer was: "You always need two when there's a double cylinder, so I proposed it."

And then Mr. Kelly said: "When you say double cylinder, you mean double-acting?"

A. Correct.

Q. And your answer was: "Yes. I suggested it because you always need two when there's double-acting cylinder."

And then Mr. Kelly said: "What will happen if I only use one sealing means?"

And then your response was: "Then on the side where there's no seal, dirt could come in. Attracted by the magnet."

[4-59] And then Mr. Kelly finished up with: "To your knowledge, has Festo ever made a rodless cylinder with only one sealing means?"

And your answer at that time, at least, was: "Always both sides. Always two. One on each side or one on each end."

A. That is correct, and that's what I mentioned yesterday. There are two ways of doing it. There's a double-acting, two-way seal, and there are single-acting seals where you need two, and the life expectancy is much higher in a one-way seal where you need two pieces. I made it quite clear yesterday.

Q. And in this testimony here, didn't you say that you need two seals to keep the dirt out?

A. Yes.

Q. And do you remember in the patent office in the prosecution of your patent telling the patent office the same thing, namely that it was necessary to keep the dirt out?

A. The dirt out? You can do it by the soft seal as well as by the guiding ring.

Q. Well, I'm not asking you how you can do it. I'm asking you if you recall what you told the patent office, and maybe I can help you by showing you exactly what it was that was said in your application.

* * *

[4-61] A. Uh-huh.

Q. And that's what he's talking about when he says: "These references."

He says: "These references," which were the two patents cited by Festo, "are obviously clearly distinguishable over the subject matter of the claims" – those are your claims – "now present in this application."

And then he says: "It is clear that neither of these two references discloses the use of structure preventing the interference by impurities located inside the tube and on the outside of the tube while the arrangement is moved along the tube."

Is your understanding of this statement that the two references did not disclose a mechanism for keeping the dirt out? Is that your understanding of this statement?

A. Impurities? Yes, located inside and outside, correct.

Q. These are the impurities that you said before can be attracted by the magnet.

A. In the sense of dirt. Impurities and dirt is the same, right?

Q. Right.

A. Okay.

Q. So this was the statement, as you understand it, by your attorney to the patent office in your patent application that your invention distinguished over these [4-62] references because you were able to keep the dirt out?

A. Correct.

Q. Okay. And do you recall that you said to Mr. Kelly in that deposition we just read that if you have only one seal, the dirt will come in on the side that doesn't have the seal?

A. Again, the same what I mentioned before, yes and no.

Q. And so isn't it true that if the cylinder that we are examining has only one seal and let's the dirt come in, that it is not part of your invention as recited in this exhibit?

A. Could you repeat that, please?

Q. Let me rephrase it.

In this statement to the patent office, you're saying that your invention is important because it keeps the dirt out.

A. Correct.

Q. And that the other references don't keep the dirt out.

A. Correct.

Q. And in the deposition that we just read with you and Mr. Kelly, you told Mr. Kelly that it you had only one seal, dirt would come in where you did not have a seal, attracted by the magnet?

A. In the one-way seal.

Q. So here you're arguing that your invention distinguishes over the prior art because it keeps the dirt

* * *

[4-100] Incidentally, in this certified copy we have established that it is totally out of order. Papers get mixed up in a patent office and so I'm having difficult.

Q. Well, here is the board.

A. May I go over there?

The examiner issued his office action, which gives the results of his examination. And, essentially, what he said, this is a paper attached to it, it's a summary form. Essentially he allowed the claims, which would have gone to patent, but he had some questions as to formalities, which, again, is a very common thing. His questions as to formalities under certain sections, they set these sections. The sections they're referring to here, 35 U.S. Code 112 say you have to be clear. Remember I told you in the application, you have to present it to the office, you have to present a very clear specification as well as clearly pointing out the claims.

The examiner had a question. "Exact method of operation unclear." And he then specifically simply asked a question. "Is device a true motor or magnetic clutch?" He just said, what is it, one or the other?

Now, when they went in the application, which was translated from the German, it called this whole deal here that we're talking about a linear motor. The examiner had this question on that point. A question simply as to [4-101] semantics.

He also said, "Improperly multiply dependent." He was talking about the claims. You have to specifically number the claims in a certain way. Under a German practice or foreign practice.

THE COURT: Hold on.

(Fire engine going by.)

THE COURT: It's hard enough to hear in this courtroom without outside interference.

(Pause.)

THE COURT: All right.

THE WITNESS: Thank you, your Honor.

A. Under German practice and other countries' practice they can give certain numbers in the dependent claims, referring back to more than one or two. It's easily straightened out – because remember I said it was a translation of the German – by renumbering. So the examiners found no art, no prior art, nothing in his examination that said you can't have a patent because Jones shows this and Smith shows that. He said: I find it allowable. Clear this up, tell me what it is.

Q. Okay.

Now, as a result of that action, was there a response by the applicant's attorney? ?

A. Yes.

[4-102] Incidentally, you have a three-month period in which to respond back. You have the right to respond back to the examiner with respect to this office action. It's called a response. And, again, all of this has to be in writing.

Q. Now, what was contained in the – we have another board here, maybe you can exp'ain what's on this board for the Court and the jury.

A. Should I come there?

Q. Yes. Why don't you move over there.

THE COURT: The one with file history on it is exhibit?

MR. HOFFMANN: The one with the file history the office action on it is P-68, I believe.

A. Correct, Plaintiff's Exhibit P-68.

THE COURT: Do the jurors have that in their little book?

MR. HOFFMANN: Yes.

THE COURT: Okay. Now what are we going to now?

MR. HOFFMANN: 31A which is not in the book but it's the Claim 1 of the issued patent.

THE COURT: Which is Exhibit 14.

MR. HOFFMANN: Right.

THE COURT: Don't they have the issued patent in [4-103] their book?

MR. HOFFMANN: The issued patent's in the book, yes. That's the exhibit right in the beginning, the first exhibit is the issued patent. Claim 1 of the issued patent.

THE COURT: All right, you have all these three documents in your book. You can go back and forth with them when you hit the deliberation room.

Q. Now, why don't you explain what happened or how a response was filed by the applicant's attorney.

A. The exact is in the file history, but this is essentially what happened here. the United States attorney for Dr. Stoll in response to that office action came back and he canceled Claim 1, which is that claim over there,

original Claim 1, he canceled it, which is permissible under the practice; and he canceled some other claims of those original 12, and he inserted a new claim, which was 13.

At the very end of examination as a patent issues they renumber all the claims. It may be confusing when we talk about original Claim 1 and now new Claim 1 which went in as 13. Claim 1 in the patent was this Claim 13 that went in at this point.

When the U. S. attorney for Dr. Stoll put in this Claim 13 that I'm pointing to here, he added additional language to the claim. He also made a very brief statement to the patent office saying: I'm resubmitting this and here [4-104] it is.

He also, at that time canceled or amended the claim – Strike that.

What he did in his claim that he resubmitted, he no longer referred to either a linear motor or a clutch, but he used entirely new words. He used "in an arrangement" and so forth. So in his new claim he did not answer that directly.

Q. In your opinion what did he do? What had he done?

A. Well, he added a lot of unnecessary language.

MR. NEUSTADT: Objection.

THE COURT: Overruled.

Q. Can you point to any particular language that is significant here to what we're talking about?

A. Well, right here the words we've been hearing –

THE COURT: Unless they've got the greatest eyesight in the world . . .

Q. You will have to read it and they have copies of the claim. Count down the lines of the claim perhaps and they can follow –

A. Well, it's not the same as in their book. I'll read it. There is a statement in here. "Wherein said driven member includes a cylindrrical sleeve made of a magnetizable material and encircles said tube," he added this language among a few other things in there which in my opinion –

MR. NEUSTADT: Objection, your Honor, move to [4-105] strike. He's giving testimony now –

THE COURT: Overruled. It's his opinion it's unnecessary language. You can cross on it.

Now, what's the next question?

Q. I would like him to finish the answer.

What is your opinion on adding that language?

A. He added this terminology, he added that term in there which in my opinion is unnecessary. The examiner was willing to allow the claim, as I pointed out over here, he just had a couple of questions here. In my opinion, all that was necessary for the U. S. attorney to say is it's a linear motor, that's what I take it to be, the testimony is it's a linear motor.

As to the second, he simple had to say renumber it. That's why I say this language was unnecessary.

Q. Would your opinion with the claim as originally filed with an explanation as to linear motor would that have been allowed?

A. Yes.

Q. And would that then have appeared in the issued patent as originally filed?

MR. NEUSTADT: Objection, leading.

THE COURT: Sustained.

Q. If that original Claim 1 had be allowed, what would have been the result of that?

[4-106] A. It would have appeared in the issued patent as Claim 1, the independent claim.

Q. Okay.

However, after he submitted the new claims, what was the next step in prosecution?

A. The examiner in effect allowed it at that point with the new claims, but there was in the specification, the written portion that explains – there was still a reference to linear motor, so the U. S. attorney had not changed that or addressed that, so he asked them to clear that up. So the U. S. attorney simply entered what we call amendments and asked the patent office on Line 6 to change "linear motor" to "magnetically coupled arrangement" or whatever term used, and then the patent issue.

Q. As a result of the prosecution history, have you reached any conclusions regarding the scope of the claims?

MR. NEUSTADT: Objection, your Honor.

THE COURT: Sustained.

Q. Are you familiar with the Doctrine of Equivalents?

MR. NEUSTADT: Objection, your Honor.

THE COURT: Let me see you at side bar as to where this is going.

[4-107] (CONFERENCE AT THE BENCH AS FOLLOWS:

THE COURT: What's your question going to be?

MR. HOFFMANN: My question is going to be what is the Doctrine of Equivalents. And follow up: In your opinion, that would prevent the Doctrine of Equivalents from being applied?

THE COURT: I will sustain that objection.

MR. NEUSTADT: A clearly legal conclusion.

THE COURT: What I will allow, however, and we talked about this at length in conference beforehand, because as you know, I should be issuing an opinion soon. This is the only area I really disagreed with the Master on. Mr. Neustadt said that one issue maybe whether or not a reasonable competitor looking at the prosecution history would believe that the inventor was forced to relinquish or abandon a certain limitation in order to procure the patent. I may not have the words exactly right but that's the gist of it from all the cases. I think the Hoganas case is the one I'm thinking of, particularly, the one you cited to me.

MR. NEUSTADT: Yes.

THE COURT: So I would allow him to say that from his experience in the field in doing this would a reasonable person or competitor use this as an abandonment. What I won't allow is questions about: Does this trigger [4-108] prosecution estoppel or Doctrine of Equivalents? That kind of thing.

MR. NEUSTADT: I don't think this witness has an expertise to testify as to his competitor. He is just a patent attorney.

MR. HOFFMANN: I disagree with that. He represents many companies, and that's what a company does, it goes to a patent attorney.

THE COURT: Would somebody familiar with the patent field, I would allow that, would a reasonable person looking at this history with familiarity with the prosecution world conclude that it had to be given up.

MR. NEUSTADT: I'll state an objection for the record.

THE COURT: You can, but I'm assuming that's what you're going to do with your expert.

MR. NEUSTADT: Not with a patent expert.

THE COURT: You're right, but I think the reasonable competitor, he may not know about the reasonable competitor, but he can certainly talk about the reasonable person with patent experience whether looking at this history what they would understand from that. I will allow him to do.

MR. NEUSTADT: Then he's just giving an opinion of law as a patent attorney.

[4-109] THE COURT: No, no. What I won't let him do is give the opinion of law.

MR. HOFFMANN: I have one other question.

THE COURT: I'm not doing all this now.

MR. HOFFMANN: No, just one quick question. You said that he would put part of his case in right away. Part of our case is his cross.

THE COURT: That's right. The only thing that's going to happen in an hour is that I measured it for on best mode. But, otherwise, it's all been cross on infringement. There's about an hour on THYSSEN that I won't debit you for. . . . END OF CONFERENCE AT THE BENCH.)

[4-110] BY MR. HOFFMANN:

Q. In your opinion, would a man skilled –

THE COURT: Person.

Q. – person skilled in –

MR. HOFFMANN: Sorry, your Honor.

Q. – a person skilled in the analysis of the file wrapper history conclude that anything had been given up or dedicated or released from the patented invention from reviewing the file history and comparing what happened, particularly old Claim 1 and issued Claim 1?

MR. NEUSTADT: Let me give my objection, your Honor. I know you've overruled it. That's a legal conclusion.

THE COURT: Please, you need a basis for it. I'm actually going to sustain this on form. I know he's struggling with the form. But, maybe you could just rephrase that about somebody who is experienced in the patent field.

Q. Somebody who is experienced in the patent field, would somebody reviewing the file history, who's experienced in the patent field, is it your opinion that they would conclude that anything had been given up in the difference between original Claim 1 and what was Claim 1 of the finally issued patent?

MR. NEUSTADT: Objection, leading and also the [4-111] other objection, too, would someone conclude that.

THE COURT: It wasn't exactly how we talked about – at the risk of just having to do this 17 times, if I could just see you at side bar.

(CONFERENCE AT THE BENCH AS FOLLOWS:

THE COURT: The problem I'm running into, it's not so much whether something was given up or added. Of course it was. The standard is that they had to relinquish it in order to procure the patent, as I understand the Hoganas statute ruling. But someone who is experienced in the field, looking at this prosecution history, reasonably concluded they were required –

MR. NEUSTADT: Your Honor, that is not the standard.

THE COURT: Well, what do you think the standard is? Because I want to just make sure that this isn't an issue on appeal.

MR. NEUSTADT: It most definitely is. The standard is, it starts with Doctrine of Equivalents is an exception, not the rule.

THE COURT: I know that.

MR. NEUSTADT: You're not limited by the prior art. What he's required to give up –

THE COURT: Please, I don't need the dissertation. [4-112] I've gotten it in the brief. The question is I don't want to go up on this question. As I understand it, it is not just that something was abandoned or changed. Of course it was.

MR. NEUSTADT: The standard is, what does a reasonable competitor conclude from looking at this, not – a reasonable competitor does not say, was he required to give this up. It's just what does a reasonable competitor conclude from reviewing this?

THE COURT: All right. You can phrase it alternatively, if you want. I'm not going to tell you your view of the law is.

MR. HOFFMANN: Would someone experienced in the field be able to determine, would somebody experienced in the field determine whether the applicant was required to relinquish any of the subject matter that differs between issued Claim 1 and originally filed Claim 1?

THE COURT: All right. And any variation that you would like of that. But it can't just be abandoned or changed, because, of course, everyone agrees it was changed.

MR. NEUSTADT: That's right. Required to relinquish.

THE COURT: The reason they did it was in order to procure.

MR. NEUSTADT: Because there is no rule that if you [4-113] only give up what you're required to give up. The rule is –

THE COURT: I tell you what, I know that's your thing, you filed it, and they can phrase it however they want, but it's stupid to just say to give it up and change it. Because, that's –

MR. HOFFMANN: Or were you required to relinquish it?

THE COURT: However you want. I mean, I'm not going to dictate that to you. But the way you said it was –

. . . END OF CONFERENCE AT THE BENCH.)

[4-114] BY MR. HOFFMANN:

Q. Mr. Chovanes, in your opinion, would someone experienced in the field conclude, in reviewing the file history be able to determine whether the applicant here was required to relinquish any of the subject matter that differs from – between issued Claim 1 and originally filed Claim 1?

MR. NEUSTADT: Objection, legal conclusion and objection, leading, and also an objection that this witness doesn't have any particular expertise to rule on this, but I know you are overruling it.

THE COURT: Overruled. And it's obvious you are not somebody in the industry. The question is, would somebody with a background and understanding of patent histories and prosecution histories, would you be able to give an opinion on that one way or another?

THE WITNESS: My answer is yes, that one knowledgeable in this field of patents could render an opinion as to whether or not anything was given up by this –

MR. NEUSTADT: Objection, your Honor. He's now giving the legal conclusion as to what was given up.

THE COURT: Overruled.

I've only gotten half way through the answer, so I'm not sure what he's saying, so I'll listen to it. [4-115] Go ahead. Maybe you can start again.

A. My answer is yes. I believe that one skilled in patents and knowledgeable in patent prosecution, in patent law, could render an opinion in this matter on the question of whether or not anything was given up by the lawyer here when he canceled Claim 1, as originally filed, and inserted Claim 13, which eventually become one in the issued patent.

Q. I believe the question is, could you determine whether there was a requirement that he give it up as well?

A. Additionally, I believe that one could render an opinion as to whether there was a requirement as to whether anything was required to be given up.

Q. And do you have an opinion in this respect?

A. I do.

Q. What is your opinion?

A. My opinion is one, he was required to give nothing up over Claim 1, as originally filed, and, two, in fact, he gave nothing up.

MR. NEUSTADT: Objection, your Honor. Legal conclusion, move to strike.

THE COURT: Yes. I'll strike the part about whether he did give something up or not. That will be one of the key issues for you to decide as you saw on the question form. But I will allow the opinion as to whether somebody looking at this history could reasonably conclude [4-116] that he was required to give it up.

Q. Do you have an opinion as to whether Dr. Stoll was required to include in issued Claim 1, was required by the patent office in the proceeding to conclude – include in issued Claim 1 the requirement of a magnetizable sleeve?

MR. NEUSTADT: Objection.

THE COURT: I'll allow the answer, but only based on your review of the prosecution history and what that tells you, not a legal conclusion.

MR. NEUSTADT: I think he's going to give a legal conclusion.

THE COURT: Well, no, just based on what you've read in the prosecution history, is there anything in that which you see as requiring a limitation of the claim.

Go ahead.

A. My answer to that is that based on what I see from the file history there was no requirement that he add that limitation, he add that language.

Q. Now, was there any requirement – I withdraw that question.

Is it your opinion that there is any requirement in the prosecution history to have the necessity of two sealing rings?

MR. NEUSTADT: Objection. Objection, your Honor. Legal conclusion.

[4-117] THE COURT: I'm not even sure I understand the question. I'm having trouble ruling on it, so I'll sustain the objection as to form.

Q. Okay.

In regard to the number of sealing rings, you're familiar with – you read the patent, you read the specification and you studied the file history.

A. I have.

Q. Did you find any requirement in your review of the file history that the claims must be limited to two sealing rings?

MR. NEUSTADT: Objection, legal conclusion and also as to form.

THE COURT: Let me see counsel at side bar. This is difficult.

[4-118] (CONFERENCE AT THE BENCH AS FOLLOWS:

THE COURT: As I understand it, there is no argument of prosecution history estoppel with respect to the sealing rings. Is that right? It's just a question of whether they meet the graver test. So why are we going into this?

MR. HOFFMANN: Okay. I'll withdraw it.

THE COURT: You've never raised that.

MR. NEUSTADT: I don't think I understand your question, I'm sorry. Maybe I –

THE COURT: The closure prosecution history estoppel goes only to magnetizable sleeve.

MR. HOFFMANN: That's right.

MR. NEUSTADT: I think prosecution history estoppel, as I understand it, also goes to the two seals.

THE COURT: You never raised that, never, ever, before anybody.

MR. NEUSTADT: I think you and I are talking about different things.

THE COURT: You might argue that given the prosecution history, you can help use that in construing claims.

MR. HOFFMANN: He's talking about the equivalency testimony.

THE COURT: You're not using it as an estoppel, [4-119] since you're just using the history for interpretation with respect to the sleeves. Right?

MR. NEUSTADT: What I'm saying –

THE COURT: And I'll let him ask the question. If you're not pressing it, fine.

. . . END OF CONFERENCE AT THE BENCH.)

UNITED STATES DISTRICT COURT
DISTRICT OF MASSACHUSETTS

FESTO CORPORATION, Plaintiff and Counterclaim Defendant V. SHOKETSU KINZOKU KOGYO KABUSHIKI CO. LTD., a/k/a SMC CORPORATION and SMC PNEUMATICS, INC., Defendants and Counterclaim Plaintiffs	Civil Action No. 88-1814-PBS

Courtroom No. 6
Federal Building
Boston, MA 02109
9:15 a.m., Tuesday
July 12, 1994

Before: THE HONORABLE PATTI B. SARIS, District Judge and a Jury

Sixth Day of Trial

• • •

[6-52] (Conference at the bench as follows:

MR. NEUSTADT: I'd like to move for a directed verdict.

THE COURT: Do you have anything in writing?

MR. NEUSTADT: Yes. Well, I have my notes and some cases for you and –

THE COURT: Why don't we reserve. You have timely moved, we will reserve argument for a later point in time, although I've seen so much of this case through the many, many motions for summary judgment, I'm probably not going to grant it, but I want to give you the right to state it on the record and I don't want to take the jury's time now.

MR. NEUSTADT: I can do it in like about – all right.

THE COURT: Want to do it now? Go ahead. But it's got to be a minute because I don't want them sitting there.

MR. NEUSTADT: Just a minute?

THE COURT: Yes, otherwise we will do it later on.

MR. NEUSTADT: I move for directed verdict or judgment as a matter of law, as it's now called, with respect to noninfringement, with respect to the magnetizable sleeve, with respect to the two seals, also with respect as [6-53] to the nonmagnetic tube with respect to their position changes on that.

THE COURT: The nonmagnetic sleeve?

MR. NEUSTADT: There is a magnetizable sleeve and the claim has in it a nonmagnetic tube, and if you adopt one position on one, it has to be consistent. We haven't gotten into it –

THE COURT: You haven't at all. I didn't even get it. I was waiting and I couldn't wait to hear. I didn't hear anything that would create a prosecution estoppel on the magnetic sleeve.

I thought you were getting into that with the prior art, you would show me some reason they had to abandon it. I didn't hear it. I was on the edge of my seat.

MR. NEUSTADT: That's what I wanted to tell you about, your Honor, and that's why I brought these cases up here. This is not really a prosecution history estoppel case.

When you start to analyze whether a patent is infringed, first thing you do is go through every element of the claim, and the federal circuit says every element is material, you cannot ignore an element.

THE COURT: I agree. Can we go by this? I don't want to do this. I've heard it ad nauseam. I've invited you to rebrief it on whether or not attorney error, [6-54] something like that, would create a prosecution history estoppel.

We couldn't find the case. You should be getting it today or tomorrow, my opinion on summary judgment. I thought you would create an – I'm glad you're abandoning the prosecution estoppel.

MR. NEUSTADT: No, your Honor.

THE COURT: We will do it later.

MR. NEUSTADT: I reserve the right to do it later with respect to noninfringement and with respect to best mode.

THE COURT: Okay. But it's been timely filed.

. . . end of conference at the bench.)

* * *

[6-69] supposed improvement.

Can you define that for me?

A One of the improvements of the Stoll claims is magnetizable sleeve surrounding the outside magnets or the follower member.

Q What is the function of that magnetizable sleeve?

A As described in the patent, the function of the magnetizable sleeve is to prevent the influence of external magnetic steels of the function of the system.

Q And you mentioned a second supposed improvement.

What would that be?

A The second supposed improvement consisted of an exclusionary sealing of the piston by using two seals, one at each side of the piston, to prevent dirt from going into the magnets.

Q Do you think your understanding of the Stoll patent would be the same as one of ordinary skill in this art?

A I believe so. I have read the patent and that's what I interpret. That is the only thing a person skilled in the art can go by.

Q The first supposed improvement you mentioned was the shielding function.

Have you had an opportunity to review the SMC cylinders to determine whether or not it has that shielding function?

[6-70] A The SMC cylinder does not have any shielding function in the follower.

Q With respect to the second supposed improvement, the exclusionary function, have you had an opportunity to consider whether or not the SMC rodless cylinders have this exclusionary function?

A No. The SMC rodless cylinder only has one seal so the dirt cannot be excluded from the piston because it enters from the opposite side, so there is no way to protect the cylinder from either dirt or magnetic particles, not by action of any sealing system. It does not have it.

Q With respect to the magnetizable sleeve in the Stoll patent and with respect to the sleeve in the SMC rodless cylinders, is there any difference in structure between them?

A The magnetizable sleeve called for by Stoll in the patent has the function of preventing outside magnetic fields from influencing the action of the cylinder.

Since the SMC does not have that magnetizable sleeve on the outside, it is not protected from outside magnetic fields, therefore, it can be influenced from outside magnetics fields. It doesn't have that structure. The material is different and it does not have the function because it does not influence any effect from magnetic fields from the outside, therefore, it doesn't have the same [6-71] structure, does not have the same function and the results are that the SMC magnetic system is not

protected from outside influences, therefore, it's not material.

Q Now, I'd like to refer to the second supposed improvement, the exclusionary function, and I'd like you to compare the two-seal Stoll patent claim with the one-seal SMC rodless cylinder; and first I wish to ask you if there is any difference in structure between the two?

A There is a difference in structure because one has two seals and the other one has only one. Because of that difference in structure, the SMC that does not have the additional seal; it only has one, it is not protected from the inclusion of particles on the cylinder and the function, therefore, is not the same because the structure is not the same. It does not have that protection against dirt or the seal.

A The result, therefore, is that it is possible that if you use air, which is contaminated anyway, the contamination can reach the seal in the case of the SMC cylinder and not in the case of the Festo cylinder.

Q Now, I would like you to compare the result between the magnetizable sleeve in the Stoll patent and the result obtained by the SMC rodless cylinder.

A Since the SMC follower, the sleeve on the outside, is not protected against magnetic fields, it can experience the

* * *

UNITED STATES DISTRICT COURT
DISTRICT OF MASSACHUSETTS

FESTO CORPORATION, Plaintiff and Counterclaim Defendant, vs: SHOKETSU KINZOKU KOGYO KABUSHIKI CO., LTD., a/k/a SMC CORPORATION and SMC PNEUMATICS, INC., Defendants and Counterclaim Plaintiffs.	Civil Action No. 88-1814-PBS

Courtroom No. 6
Federal Building
Boston, MA 02109
9:20 a.m.,
Wednesday
July 13, 1994

Before: THE HONORABLE PATTI B. SARIS, District Judge and a Jury

Seventh Day of Trial

* * *

[7-76] A We call it a Mardrive transporter.

Q Mardrive transporter. Why do you call it a Mardrive transporter?

A It was made within the Mardrive system so that's where the name came from, and its purpose is to transport articles in the first place, limp fabric, things within a clothing factory, shirts, et cetera.

Q How did the subject matter of your patent come to be?

A Marine Engineering, as I've already said, was very strong in the manufacture of clutch motors for the garment industry.

Q Maybe you can explain what a clutch motor is.

A I think I have already. It's simply a means where the young lady operator can press her feet on a treadle, this causes the sewing machine to run, she removes the pressure from her feet and it stops. It's as simple as that.

We had been making this for quite a long time and we had a fair amount of expertise in it. And a lot of these motors were going into a place called Remploy. I'm not sure that you have anything like it in the United States.

Q Maybe you can explain Remploy?

A It was a government-funded arrangement where people who were in an accident or they are incapacitated in some way are found employment within protected factories.

Q So is it like a handicap facility?

[7-77] A That's right. Well, you know, quite young people, quite old people, but it's intended to get them back into some form of work, where you can get paid.

Q So what were you doing in connection with Remploy?

A We had already supplied them with many thousands of these clutch motors and the Department of Industry had watched the work we were doing to assist these people. A lot of them could not afford to keep pressing the feet on the treadle all day long. They couldn't afford to lift the foot of the sewing machine, couldn't afford to move the hand wheel of the sewing machine into a needle up position.

So we had designed a pneumatic brain which we fitted to the machines which permitted the handicapped people to overcome these disabilities.

Now, the government had seen the work we had been going on for years and they approached Marine Engineering and said we have a specific project. Will you join us in this project on the basis of pound for pound.

Q You mean pound for pound –

A I can't – we get a pound, they get a pound.

Q You mean the currency in England?

A Yes. We were interested in this. It was, I thought at the time, a relatively simple project. We had already put all the automatic functions into the sewing machines. What they wanted to happen, when the lady sewed two pieces of

* * *

[7-87] A Yes. It's part of a catalog that we would send out to prospective purchasers of the Mardrive transporter. It describes generally some of the applications for

what it's used for and it also contains kind of an order description form at the rear.

Q Was the government very happy with this device?

A Yes. They were quite pleased.

Q Did they make a film of the device?

A First of all, they invited the company to apply for what is known as a design award.

In the United Kingdom, annually, all the major companies that have anything new to show enter a competition and it's again organized by a government agency called the Design Council. So they asked us to enter the transporter in this competition, if you like.

And we were extremely lucky because if you got, if a company got a design award, the bait was about 200,000 pounds worth of free publicity. We were quite interested in that. So we applied.

What we didn't know about design is that there was something else, there was a prize, i.e., a surprise, the top prize in the United Kingdom for a designer. This was awarded by His Royal Highness the Duke of Edinburgh. And it was his personal prize, if you won this prize, he offered – I'm sorry – he would permit you to get any British designer [7-88] to make anything you wanted and he personally would pay for it. It was quite unusual. So we were very lucky.

The company won the design award, the company got 200,000 pounds, I got the Duke's personal prize and the government said we should make a film of this and

show it all around the world, made in Briton, some sort of rubbish.

Q What was the purpose of the film?

A It was really to promote English exports. It just filmed in a few minutes in a TV station. Nothing better to do.

MR. BODNER: Your Honor, I have a copy of that film and I'd like to show it now, Plaintiff's Exhibit 32 and I'd like to offer it into evidence.

THE COURT: Have you seen it?

MR. NEUSTADT: Yes. No objection. (Plaintiff's Exhibit No. 32, Videotape, received in evidence.)

THE COURT: Is there talking on this?

MR. BODNER: Yes.

THE COURT: There is no need for the court reporter to take this down, right, because it's an exhibit.

MR. BODNER: No, your Honor.

MR. NEUSTADT: May I have, your Honor, Professor Blanco view this along with us.

THE COURT: Absolutely. Come on up,

* * *

UNITED STATES DISTRICT COURT
DISTRICT OF MASSACHUSETTS

FESTO CORPORATION, Plaintiff and Counterclaim Defendant, vs: SHOKETSU KINZOKU KOGYO KABUSHIKI CO., LTD., a/k/a SMC CORPORATION and SMC PNEUMATICS, INC., Defendants and Counterclaim Plaintiffs.	Civil Action No. 88-1814-PBS

Courtroom No. 6
Federal Building
Boston, MA 02109
9:20 a.m.,
Thursday
July 14, 1994

Before: THE HONORABLE PATTI B. SARIS, District Judge and a Jury

Eighth Day of Trial

* * *

[8-104] that there's no evidence that SMC copied the Festo device.

MR. BODNER: Your Honor, this is not in a wilfulness sense.

MR. HOFFMANN: There was testimony they were all the same products.

MR. BODNER: He admitted that they all look the same.

MR. NEUSTADT: There is no evidence of copying.

THE COURT: The only concerning I have is – you're right, there is no evidence of copying. You're so versed in this area the law, you understand the legal significance of the word copying as opposed to infringing.

I'm not sure whether I'm not going to be flagging the whole thing in a way no one has picked up on. Do you really want a cautionary instruction?

MR. BODNER: We will object to that if that goes in, a cautionary instruction.

MR. HOFFMANN: She is saying –

MR. NEUSTADT: You could put it in the obviousness instruction that you give them, that there has been no copying.

MR. BODNER: Absolutely not. We will object

* * *

[8-119] specification. So I'm going to give you certain factors that you should consider in interpreting the scope of the claim.

The first one is the ordinary meaning of the words used in the claim. Repeating, the ordinary meaning of the words used in the claim. The second one is the specifications and drawings in the patent. The third one is the prosecution history. The prosecution history. The fourth one is the other claims of the patent. And finally, the expert testimony. The expert testimony. Where a disputed term would be understood to have its ordinary meaning by one of skill in the art from the patent and its history, extrinsic evidence that the inventor may have subjectively intended a different meaning should be given little weight.

Now, let me move on to the second step and explain that a little more. The second step is to decide whether each limitation in the properly construed claims is found in the accused device. Liability for infringement requires that an accused device contain every limitation of a claim or its substantial equivalent. Let me repeat that. Liability for infringement requires that an accused device contains every limitation of a claim or its substantial equivalent.

[8-120] Here the claim of infringement is a claim under what you have now heard referred to many times as infringement under the doctrine of equivalence. Infringement of a patent claim can be found by way of the doctrine of equivalence. It is insufficient for proof of infringement under this doctrine of equivalence that the accused devices are equivalent overall to the claimed

invention. Rather, infringement requires that every limitation of a claim be met literally or by substantial equivalent. There can be no infringement if even a single function required by a claim or on an equivalent function is not performed by the SMC rodless cylinders.

So in order to prove infringement by equivalence, Festo must prove by a preponderance of the evidence that the accused SMC device performs substantially the same function as the claimed invention in Stoll, in substantially the same way to achieve substantially the same result. And that is the test that I've set forth for you, so you don't even have to take notes on it, in 1 and 2. The theory behind the doctrine of equivalence is that if two devices do the same work in substantially the same way to accomplish substantially the same result, then they are the same, even though they differ in name, form or shape. Stated

* * *

Supreme Court, U.S.
FILED
AUG 31 2001
CLERK

(49)

No. 00-1543

In The

Supreme Court of the United States

FESTO CORPORATION,

Petitioner,

v.

SHOKETSU KINZOKU KOGYO KABUSHIKI CO., LTD.,
a/k/a SMC CORPORATION and
SMC PNEUMATICS, INC.,

Respondents.

On Writ Of Certiorari
To The United States Court Of Appeals
For The Federal Circuit

JOINT APPENDIX
VOLUME II, PAGES II-1 TO II-231

RECEIVED
SEP 4 - 2001
OFFICE OF THE CLERK
SUPREME COURT, U.S.

ROBERT H. BORK
Counsel of Record
Suite 1000
1150 17th Street, N.W.
Washington, D.C. 20036
(202) 862-5851

Counsel for Petitioner

ARTHUR I. NEUSTADT
Counsel of Record
CHARLES L. GHOLZ
ROBERT T. POUS
OBLON, SPIVAK, MCCLELLAND,
MAIER & NEUSTADT, P.C.
1755 Jefferson Davis Highway
Arlington, Virginia 22202
(703) 413-3000

Counsel for Respondents

[Additional Counsel Listed On Inside Cover]

Petition For Certiorari Filed: April 9, 2001
Certiorari Granted: June 18, 2001

235 PP

CHARLES R. HOFFMANN
GERALD T. BODNER
GLENN T. HENNEBERGER
ANTHONY E. BENNETT
HOFFMANN & BARON, LLP
6900 Jericho Turnpike
Syosset, New York 11791
(516) 822-3550

ANDREW L. FREY
DONALD M. FALK
ROBERT L. BRONSTON
MAYER, BROWN & PLATT
1909 K Street, N.W.
Washington, D.C. 20006
(202) 263-3000

Counsel for Petitioner

JAMES B. LAMPERT
HALE AND DORR
60 State Street
Boston, Massachusetts
02109
(617) 526-6000

Counsel for Respondents

EDITOR'S NOTE

THE FOLLOWING PAGES WERE POOR HARD COPY AT THE TIME OF FILMING. IF AND WHEN A BETTER COPY CAN BE OBTAINED, A NEW FICHE WILL BE ISSUED.

TABLE OF CONTENTS

Page

VOLUME I

Relevant Docket Entries.....I-1

Excerpt of Report of the Special Master Herbert F. Schwartz, Esq. Pursuant to Rule 53(e)(1) F.R.Civ.P.....I-40

Excerpt of Festo Corporation's Objections to Report of Special Master Herbert F. Schwartz, Esq. Pursuant to Rule 53(e)(3) F.R.Civ.P.....I-53

Excerpt of Plaintiff Festo Corporation's Pretrial Memorandum Under L.R. 16.5.....I-57

Excerpt of Defendant's Exhibit 105, Plaintiff Festo Corporation's Trial Memorandum.....I-61

Excerpt of Plaintiff Festo Corporation's Trial Brief (6/27/94).....I-64

Order of Hon. Judge Saris re: Pretrial Motions, July 11, 1994.....I-66

Excerpt of Defendant SMC's Exhibit 64, Festo Document.....I-81

Defendant SMC's Exhibit 66 Festo Document.....I-84

Transcripts of Jury Trial before Hon. Patti B. Saris:

Day 2 pp. 19 to 20; 90.....I-90

Day 3 pp. 67 to 74; 90 to 95; 110 to 111; 115 to 118.....I-94

Day 4 pp. 20; 57 to 59; 61 to 62; 100 to 119.....I-115

Day 6 pp. 52 to 54; 69 to 71.....I-139

Day 7 pp. 76 to 77; and 87 to 88.....I-145

Day 8 pp. 104; 119 to 120.....I-150

TABLE OF CONTENTS – Continued

Page

VOLUME II

U.S. Patent No. 4,354,125 to Stoll (Plf. Ex. 15)..... II-1

File history of U.S. Patent No. 4,354,125 to Stoll (Plf. Ex. 14), including cited references..... II-8

Translation of German Patent Publication DE-OS 27 37 924 ..... II-109

U.S. Patent No. 3,779,401 to Carroll (Plf. Ex. 17).... II-121

U.S. Reexamination Certificate for B1 3,779,401 to Carroll (Plf. Ex. 19)..... II-129

File History of U.S. Reexam to Carroll Patent (Plf. Ex. 18), including cited references and Translation of German Petty Patent 1982379.... II-133

PLAINTIFF'S EXHIBIT 15

ALL-STATE LEGAL SUPPLY CO

U. S DEPARTMENT OF COMMERCE
United States Patent and Trademark Office

January 31, 1992
(Date)

THIS IS TO CERTIFY that the annexed is a true copy from the records of this office

of U.S. Patent 4,354,125.

By authority of the
COMMISSIONER OF PATENTS AND TRADEMARKS

Certifying Officer.

United States Patent [19]
Stoll

[11] 4,354,125
[45] Oct. 12, 1982

[54] MAGNETICALLY COUPLED ARRANGEMENT FOR A DRIVING AND A DRIVEN MEMBER

[76] Inventor: Kurt Stoll, Lenzhalde 72, D-7300 Esslingen, Fed. Rep. of Germany

[21] Appl. No.: 153,999

[22] Filed: May 28, 1980

[30] Foreign Application Priority Data

Jan. 1, 1979 [DE] Fed. Rep. of Germany 2922444

[51] Int. Cl.³ H02K 49/00
[52] U.S. Cl. 310/103; 310/104
[53] Field of Search 310/103, 104

[56] References Cited

U.S. PATENT DOCUMENTS

1,697,142	1/1929	Roller	310/104 X
2,894,485	8/1959	Richter et al.	310/104
3,391,289	7/1968	Danilewicz et al.	310/103 X
3,462,666	8/1969	Martinek	310/14 UX
3,483,412	12/1969	Bakker et al.	310/103
3,847,502	11/1974	Isbell	310/104 X

Primary Examiner—Donovan F. Duggan
Attorney, Agent, or Firm—Blanchard, Flynn, Thiel, Boutell & Tanis

[57] ABSTRACT

The invention is concerned with a magnetically coupled arrangement for a driving and a driven member, which arrangement is operable by a pressure medium and is used in a conveying system. A slidable piston (16) within a tube (10) has an arrangement of annular magnets (20) provided at each end with sealing and sliding members (24, 26). A driven assembly (18) slidable on the outer surface of the tube (10) has an arrangement of annular magnets (32) corresponding to the magnets (20) and provided at each end with a sliding ring (44). The members (24, 26, 44) prevent ingress of foreign bodies to the magnet locations, and consequently enable the spacing between the magnets and the tube (10) to be very small. A good magnetic coupling is achieved resulting in effective transmission of power. Several pistons (16) abutting one another can be used for conveying heavy loads.

7 Claims, 1 Drawing Figure

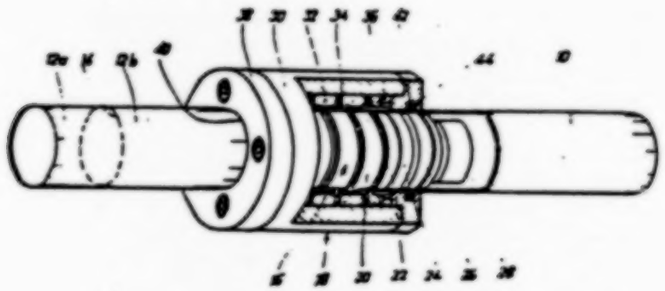

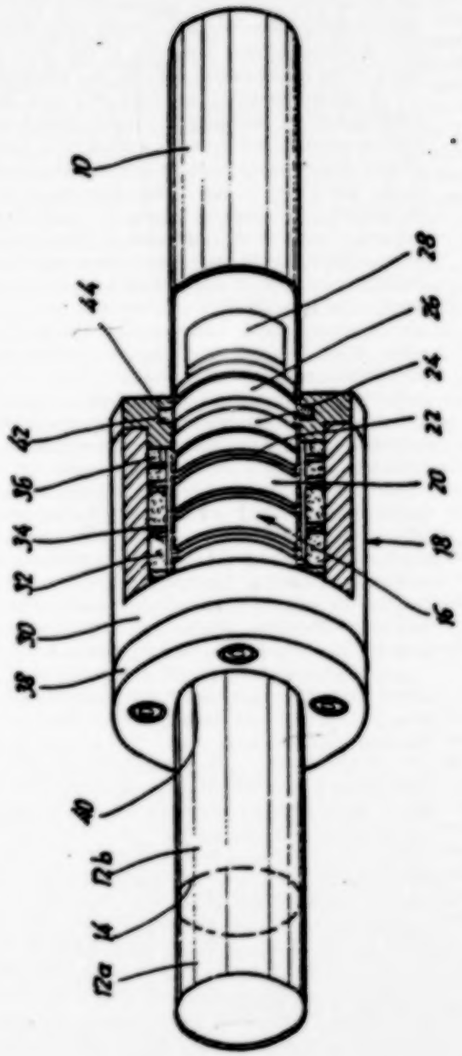

MAGNETICALLY COUPLED ARRANGEMENT FOR A DRIVING AND A DRIVEN MEMBER

FIELD OF THE INVENTION

Background of the Invention

The invention relates to a magnetically coupled arrangement operable by a pressure medium, and for use in a conveying system.

Magnetically coupled arrangements of this type are primarily used in conveying systems, having a driven assembly connected with a carriage for the goods to be conveyed. In this way, even goods of large size can be conveyed in a way similar to a pneumatic tube conveyor system.

In order to ensure trouble-free operation, the known magnetically coupled arrangement requires a greater degree of radial play between the adjacent surfaces of the magnet arrangements and the tube. It was generally agreed that this would be the only way of coping with the unavoidable surface roughness and cross-sectional irregularities of the tube. On the other hand, in the interests of increasing the magnetic drive force between the piston and the driven assembly, the total air gap between the two magnet arrangements would have to be kept as small as possible. A design incorporating a small air gap would require smaller, and thus lighter and substantially cheaper magnet arrangements than those used to date to achieve the required drive force between the piston and the driven assembly of the linear motor.

It was recognised that the non-magnetic materials available today have surface qualities good enough to enable by this alone a substantial reduction in the air gaps between magnet arrangements and tube surfaces in comparison with prior art, though unacceptable faults invariably developed in practical operation. These faults, however, have now been found to be due not to surface roughness and cross-sectional irregularities (superior surface quality can now be achieved even in butt-welded tube sections), but rather to the presence of dirt and impurities on the tube surfaces, which cannot pass through the small gaps between magnet arrangements and tube surfaces but tend to be wedged in said gaps.

According to the present invention there is provided a magnetically coupled arrangement for use in a conveying system, said motor being operable by a pressure medium and comprising a tubular part connectible to a source of the pressure medium, a piston which is slidable in said tubular part and which has sealing means at each end for wiping engagement with an internal surface of the tubular part and so as to form a seal for the pressure medium, and a driven assembly which is slidable on the tubular part and which has means at each end for wiping engagement with an external surface of the tubular part, the piston and the driven assembly each carrying a drive magnet arrangement in the form of a hollow cylindrical assembly, each magnet arrangement having radial play relative to the adjacent surface of the tubular part, and surfaces of the magnet arrangements which face the tubular part being closely adjacent to the respective surfaces of the tubular part.

Preferably the wiping means of the driven assembly and the sealing means of the piston lie in the same plane transversal to the axis of the tubular part. The contact pressure of the wiping means and sealing means does not exert a torsional deforming moment on the tubular part, which should preferably have thin walls in order to ensure a small total air gap between the two magnet arrangements.

Preferably also, the sealing means of the piston comprise sealing rings and the piston is provided with sliding guide rings near the sealing rings. The advantage of this is that a relatively soft material can be used for the piston sealing rings, which no longer have to perform any significant guiding functions. In this way, friction losses in the motor can be reduced to a minimum.

The tubular part may be made of a thin, stainless material such as non-magnetic special steel, brass or a plastics material, and water or a mixture of water and oil may be used as the pressure medium. The movement of the piston and of the driven assembly is initiated immediately the pressure medium is admitted and stopped as soon as the admission of pressure medium ceases, which permits extremely accurate positioning of the driven assembly by controlling the pressure medium supply. The pressure of the medium does not have to be high, since the piston is moved more by being carried along in the medium flow than by the admission of differential pressure.

If the driven assembly is provided with a sleeve made of a magnetisable material, which encircles the hollow cylindrical assembly of the magnet arrangement, magnetic leakage fields in the vicinity of the driven assembly can be kept to a minimum. In this way, undesirable braking forces, which would otherwise be generated while piston and driven assembly past magnetisable machine components, are avoided. By selecting a non-magnetisable material for the piston body, a more inhomogeneous magnetic field is generated in the space defined by the driven assembly, a favourable development in the interests of increasing the drive force.

Advantageously the magnet arrangements are represented by radially polarised annular magnets arranged in axial sequence and separated from each other by non-magnetisable spacer rings. The segmented structure of the magnet arrangements contributes to the creation of an axially inhomogeneous magnetic field, which again increases the drive force exerted on the driven assembly by the piston.

If the piston carries a flexible buffer at each end, the peripheral surface of which is spaced radially from the internal surface of the tubular part, the piston can be stopped very accurately by running into a rigid obstacle. A further advantage of this development lies in the fact that a piston of large overall axial dimensions can be constructed, which can pass through curved tube sections inspite of the small radial distance between the internal magnet arrangement and the internal tube surface. In this way a long magnetically coupled arrangement comprising articulated piston sections and corresponding magnetically coupled driven assemblies tiltable relative to each other is achieved. With a magnetically coupled arrangement of this design, a large load is distributed over a long tube section, the drive force between piston and driven assembly is satisfactory, and the piston can pass through curved tube sections.

BRIEF DESCRIPTION OF THE DRAWINGS

An embodiment of the invention will now be described by way of example only with reference to the accompanying drawing, the single FIGURE of which is a perspective view of a magnetically coupled arrangement according to the invention, a section of the driven assembly and of the tube having been removed to show details of the piston.

DETAILED DESCRIPTION

The drawing illustrates a magnetically coupled arrangement operated by a pressure medium, a relatively thin-walled and narrow tube 10 being made of a stainless, non-magnetic material such as non-magnetic special steel, brass or a plastics material, if preferred with glass reinforcement. The tube is made up of butt-welded or joined tube segments 12*a*. 12*b* joined by welds 14 which do not result in any surface irregularities in the internal or the external tube surface. Within the tube 10, which may be connected to a pressure medium source or sink at either or both ends, a piston 16 is movably arranged. A driven assembly 18 is movably mounted on the outside of the tube 10. A carriage for the goods to be conveyed, which is not illustrated here, can be attached to the driven assembly 18.

The piston 16 comprises a piston body made of aluminium or another light-weight non-magnetic material. This piston carries permanent annular magnets 20 which are arranged in axial sequence, and which are radially polarised and separated by spacers 22. At each end of the annular magnet arrangement which forms a hollow cylindrical assembly, the piston body is provided with sliding guide rings 24 partially seated in grooves on said piston body and projecting beyond the piston body surface, which sliding guide rings pass along the internal tube surface in a sliding fit. Outside, if viewed axially, of these sliding guide rings 24 are arranged elastomeric sealing rings 26, also seated in grooves on the piston body. Each end face of the piston carries a buffer 28, by which the piston 16 can be brought to a halt against a fixed stop, not illustrated here. These buffers 28 further serve in mechanically linking several pistons 16, as will be described in more detail below.

The external surface areas of the annular magnets 20 are very close to the internal surface of the tube 10. Since, however, the annular magnet arrangement 20 is enclosed on each side by a sliding guide ring 24 and a sealing ring 26, any impurities left in the tube 10 from its manufacturing process or carried along with the pressure medium, (preferably oil or a mixture of 95% water and 5% oil), cannot penetrate into the small gap between the outside of the annular magnet arrangement of the piston and the inside of the tube. Such impurities might otherwise result in the piston 16 seizing in the tube 10.

Instead, any such impurities are pushed along in front of the piston 16 by the sealing rings 26 or—should they manage to get past these—by the sliding guide rings 24, so that the annular magnet arrangement is invariably faced by a clean section of the internal tube wall.

The design of the driven assembly 18 of the magnetically coupled arrangement is essentially the inverse of the piston 16, the mirror image being a cylindrical surface midway between the external and the internal tube surfaces. The counterpart of the piston body is a sleeve 30 made of a magnetisable material to reduce magentic leakage fields. The sleeve 30 encloses permanent annular magnets 32 arranged in axial sequence, which magnets are radially polarised in the same direction as the annular magnets 20 and separated by spacers 34. The annular magnets 32 are clamped between two end faces 38 likewise made of a magnetisable material and bolted to the sleeve 30 by way of elastomeric thrust rings 36.

The end faces 38 have a central opening 40 encircling the tube 10 with little play, and in the peripheral inner surface of each end face 38, which is coated with a low friction material such as tetrafluoroethylene, is provided an inwardly opening groove 42 in which a wiper ring 44 is located. These wiper rings 44 ensure, in the case of the driven assembly 18, that the internal surface area of the hollow cylindrical magnet arrangement 32 is very close to the external surface of the tube 10, and that no foreign bodies can penetrate into the narrow gap between the annular magnets 32 and the tube surface. Any such foreign bodies, which commonly collect on tube surfaces not protected from the surrounding atmosphere, are pushed away by the wiper rings 44 before reaching the annular magnets 32.

Since the overall "air" gap between the internal magnet arrangement represented by the annular magnets 20 and the external magnet arrangement represented by the annular magnets 32 (this being made up of the distance between the annular magnets 20 and the internal tube surface, the wall thickness of the tube 10 and the distance between the annular magnets 32 and the external tube surface) can now be kept very small (there is no need for small foreign bodies to pass through between the magnet arrangements and the tube surfaces), a very good magnetic coupling can be achieved between the two annular magnet arrangements, resulting in effective transmission of the power provided by the pressure medium to the driven assembly.

As the illustration shows, there is a flush radial arrangement of the wiper rings 44 and the sealing rings 26, so that the contact force does not exert any torsional moment on the tube. This enables easy movement of the piston and the driven assembly along curved tube sections.

The magnetically coupled arrnagement described above is easily adapted for transporting heavier loads. Two pistons 16 are axially arranged in a tube section with auxiliary venting, the pistons butting against each other by their buffers 28, and driven assembly is provided for each piston to be automatically aligned with the corresponding piston by magnetic force. The carriage for the goods in then pivotally mounted on each of the driven assemblies. In this way, the two pistons now effectively form a piston of double (triple etc.) length with "articulated" individual pistons (held in contact by pressure), ensuring synchronous movement of the two (three etc.) driven assemblies. In this way, the weight of the load to be conveyed is distributed over a long tube section without, however, creating any passage problems such as would occur when using correspondingly long pistons and driven assemblies in conjunction with the small air gap, between magnet arrangements and tube surfaces which are specified in the invention. Even passage along curved tube sections is possible, which would not be the case with one-piece pistons and driven assemblies of corresponding length.

It is obvious that this effective lengthening of the driving and the load carrying assemblies can be achieved, without in any way modifying the standard components of the magnetically coupled arrangement, i.e. piston 16, driven assembly 18, for example on site and after completion of the initial installation. The distribution of the load over a longer section of the tube 10 is of special importance in the case of thin tubes, which in turn are preferable from the point of view of the magnetic coupling between piston and driven assembly. Thin plastic tubes, otherwise being an excellent solution

owing to their surface properties, tend to have inferior load carrying capacity, which is why articulated piston and driven assembly arrangements are especially suitable for tubes of this kind.

To stop the driven assembly at a certain point, a position transmitter acting on the pressure medium supply for the tube 10 is installed. This transmitter may either respond mechanically or optically to the approach of the driven assembly, or can alternatively be an inductive transmitter or a transmitter responding to magnetic leakage fields, e. g. a reed switch.

Various modifications may be made without departing from the invention.

Although a particular preferred embodiment of the invention has been disclosed in detail for illustrative purposes, it will be recognized that variations or modifications of the disclosed apparatus, including the rearrangement of parts, lie within the scope of the present invention.

The embodiments of the invention in which an exclusive property or privilege is claimed are defined as follows:

1. In an arrangement having a hollow cylindrical tube and driving and driven members movable thereon for conveying articles, the improvement comprising wherein said tube is made of a nonmagnetic material, wherein said driving member is a piston movably mounted on the inside of said tube, said piston having a piston body and plural axially spaced, first permanent annular magnets encircling said piston body, said piston further including first means spacing said first permanent magnets in said axial spaced relation, the radially peripheral surface of said magnets being oriented close to the internal wall surface of said tube, said piston further including plural guide ring means encircling said piston body and slidingly engaging said internal wall and first sealing rings located axially outside said guide rings for wiping said internal wall as said piston moves along said tube to thereby cause any impurities that may be present in said tube to be pushed along said tube so that said first annular magnets will be free of interference from said impurities, wherein said driven member includes a cylindrical sleeve made of a magnetizable material and encircles said tube, said sleeve having plural axially spaced second permanent annular magnets affixed thereto and in magnetically attracting relation to said first permanent annular magnets and second means spacing said second permanent annular magnets in said axially spaced relation, the radially inner surface of said magnets being oriented close to the external surface of said tube, said sleeve having end face means with second sealing rings located axially outside said second permanent annular magnets for wiping the external wall surface of said tube as said driven member is moved along said tube in response to a driving movement of said piston to thereby cause any impurities that may be present on said tube to be pushed along said tube so that said second permanent annular magnets will be free of interference from said impurities.

2. The arrangement according to claim 1, wherein said sealing rings on said driven member are formed as wiper rings which are seated in annular grooves opening inwardly on said end face means of said driven assembly.

3. The arrangement according to claim 1, wherein said sealing rings on said driven assembly and said sealing rings on said piston lie in the same plane perpendicular to the axis of said tube.

4. The arrangement according to claim 1 wherein said tube is made of a thin non-magnetic material, and wherein water or a mixture of water and oil is used as the pressure medium.

5. The arrangement according to claim 1, wherein said sealing rings are formed of a pliable, elastic material.

6. The arrangement according to claim 1, wherein said piston body is made of a non-magnetisable material.

7. The arrangement according to claim 1, wherein said piston has a flexible buffer at each end, the peripheral surface of which is spaced radially from the internal surface of said tube.

* * * * *

01-434
02/4,354,125 Dec

PLAINTIFF'S EXHIBIT 14
ALL-STATE LEGAL SUPPLY CO.

310-103

...LAR UTILITY

NUMBER PATENT	PATENT DATE				
153999	12 OCT 1982				
NUMBER	FILING DATE	CLASS	SUBCLASS	GROUP ART UNIT	
06/...999	05/28/80	060		34[illegible]	

APPLICANTS: K...TOLL, ESSLINGEN, FED REP GERMANY.

DLX

...NUING DATA**********
...ED

...N/PCT APPLICATIONS**********
...D FED REP GERMANY P2922444.0 06/01/79

Foreign 35 USC	Verified	Allowed	Drawings Yes / No	Examiner's Initials	AS FILED →	STATE OR COUNTRY	SHEETS DRWGS.	TOTAL CLAIMS	INDEP. CLAIMS	FILING FEE RECEIVED	ATTORNEY'S DOCKET NO.
						DEX	1	12	1	$ 71	MLR CASE 28

ADDRESS: BL... FLYNN, THIEL,
BO... TANIS
20... ...ING RD.
KA... MI 49008

TITLE: ~~EL... OR OPERABLE BY A PRESSURE MEDIUM~~
...Mechanically Coupled Arrangement for a Driving and a Driven Member

This is to certify that annexed hereto is a true copy from the records of the United States Patent and Trademark Office of the File Wrapper and Contents of the file identified above.

By authority of the
COMMISSIONER OF PATENTS AND TRADEMARKS

M. Lee
Certifying Officer

...AN 31 1992

[redacted]

LICENSING

Entered

CONTENTS

1. Application Print(s) papers.
2. Rej (3mos) MAIL 2 1981
3. Request Ext. Time (Request Received) 6.1.2.1981
4. Appeal Brief 11/2/81
5. Examiner's Answer 11 MAR 1982
6. Board's Decision March 25, 1982
7. Notice of Allowance June 2, 1982
8. Issue Fee Paper June 14, 1982
9. Title June 14, 1982
10. Statement Priority July 28, 1982
11.
12.
13.
14.
15.
16.
17.
18.
19.
20.
21.
22.
23.
24.
25.
26.
27.
28.

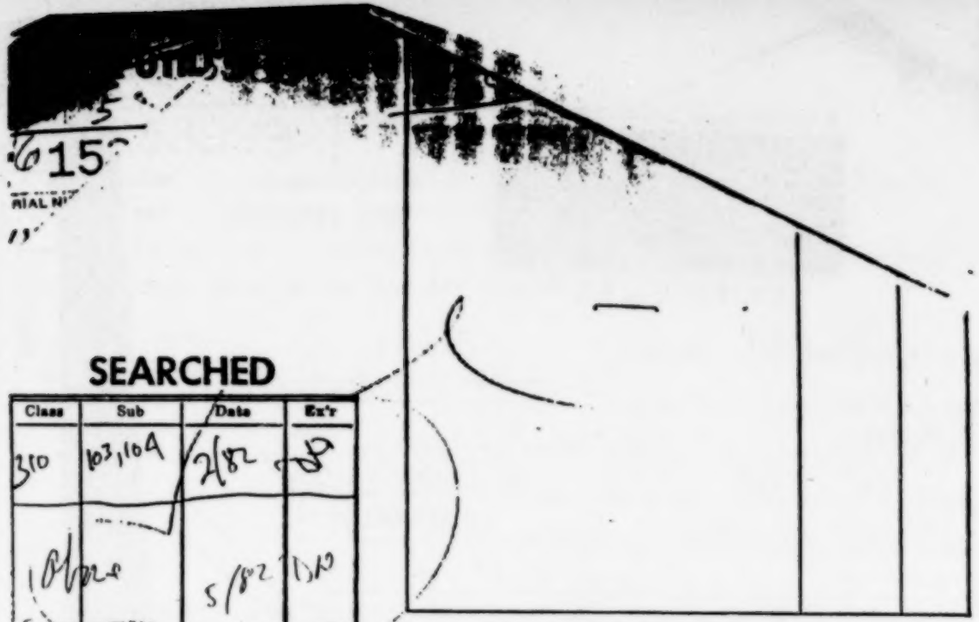

SEARCHED

Class	Sub	Date	Ex'r
310	103,104	2/82	DP
1 Abn		5/82	DP

INTERFERENCE SEARCHED

Class	Sub	Date	Ex'r
310	80, 107, 101	5/82	DP

PRINT CLAIM(S): 1

INDEX OF CLAIMS

Claim Final	Claim Original	Date	Claim Final	Claim Original	Date
	1			28	
	2			27	
	3			28	
	4			29	
	5			30	
	6			31	
	7			32	
	8			33	
	9			34	
	10			35	
	11			36	
	12			37	
	13			38	
	14			39	
	15			40	
	16			41	
	17			42	
	18			43	
	19			44	
	20			45	
	21			46	
	22			47	
	23			48	
	24			49	
	25			50	

SYMBOLS — STATUS

- V ..... Rejected
- = ... Allowed
- ~ (Through numeral) Canceled
- + ... Restriction requirement
- N ..... Nonelected invention or species
- I ..... Interference
- A ..... Appeal
- O ..... Objected

...LAR UTILITY

4354125

SERIAL NUMBER	FILING DATE	CLASS	SUBCLASS	GROUP ART UNIT	
06/153,999	05/28/80	060		354	Dwg

NUMBER PATENT 4354125

310-103

APPLICANTS: KURT STOLL, ESSLINGEN, FED REP GERMANY.

LLX

CONTINUING DATA********
VERIFIED

FOREIGN/PCT APPLICATIONS********
VERIFIED — FED REP GERMANY — P2922444.0 — 06/01/79

Foreign priority claimed 35 USC 119 conditions met — Yes — Verified and Acknowledged — Examiner's Initials

AS FILED	STATE OR COUNTRY	SHEETS DRWGS.	TOTAL CLAIMS	INDEP. CLAIMS	FILING FEE RECEIVED	ATTORNEY'S DOCKET NO.
	DEX	1	12	1	$ 21	NLR CASE 28

ADDRESS: BLANCHARD, FLYNN, THIEL, BOUTELL & TANIS, 2026 RAMBLING RD, KALAMAZOO, MI 49008

TITLE: ~~LINEAR MOTOR OPERABLE BY A PRESSURE MEDIUM~~ Magnetically Coupled Arrangement for a Driving and a Driven Member

U.S. DEPT. of COMM.-Pat. & TM Office — PTO-436L (rev. 10-71)

PARTS OF APPLICATION FILED SEPARATELY

AT ALLOWANCE

SHEETS DRWGS.	FIGURES DRWGS.	CLAIMS	CLASS	SUBCLASS
1	1	3	310	103

RETENTION LABEL: K85

PREPARED FOR ISSUE 6/7/82

(Assistant Examiner) — (Docket Clerk)

EXAMINER'S AMENDMENT PASSED FOR ISSUE
BY EXAMINER
ART UNIT 212

(Primary Examiner) — (Art Unit)

Estimate of printed pages		Issue fee due
Drawing(s)	Spec(s)	$112

Notice of allowance and issue fee due (est.)

Date mailed	Date paid
6-2-82	7/22/82

153999

Applicant : Kurt Stoll

Invention : A LINEAR MOTOR OPERABLE BY A PRESSURE MEDIUM

Honorable Commissioner of Patents and Trademarks
Washington, D. C. 20231
Sir:

Herewith is the above-identified application comprising the following parts:

- [x] Specification
- [x] Declaration ~~axx&xkk~~
- [1] Sheet(s) of [x] Formal [ ] Informal Drawings

Basic Filing Fee	$65.00
Additional Fees:	
Total number of claims in excess of 10, times $2.00	6.00
Number of independent claims minus 1, times $10.00	.00
Total Filing Fee	$71.00

- [x] Please charge $ 71.00 to Deposit Account No. 02-2675. A duplicate copy of this sheet is enclosed.
- [x] The Commissioner is hereby authorized to charge any fees which may be required, or credit any overpayment, to Deposit Account No. 02-2675. A duplicate copy of this sheet is enclosed.
- [ ] Letter re Assignment
- [ ] Claim of Priority
- [x] Acknowledgment Postal Card

Respectfully submitted,

Ronald J. Tanis
Reg. No. 22 724

BLANCHARD, FLYNN, THIEL, BOUTELL & TANIS,
2026 Rambling Road
Kalamazoo, Michigan 49008

RJT/1
IN DUPLICATE
Encl: As Listed Above
(616) 381-1156

P. S. Applicant wishes to claim the priority of German Patent Application Serial No. P 29 22 444.0, filed June 1, 1979.

153999

SD 10-6-80

~~A Linear Motor Operable by a~~
~~Pressure Medium~~
a Magnetically Coupled Arrangement for a Driving and a Driven Member

Abstract of the Disclosure

The invention is concerned with a ~~linear motor~~ arrangement which is operable by a pressure medium and is used in a conveying system. A slidable piston (16) within a tube (10) has an arrangement of annular magnets (20) provided at each end with sealing and sliding members (24, 26). A driven assembly (18) slidable on the outer surface of the tube (10) has an arrangement of annular magnets (32) corresponding to the magnets (20) and provided at each end with a sliding ring (44). The members (24, 26, 44) prevent ingress of foreign bodies to the magnet locations, and consequently enable the spacing between the magnets and the tube (10) to be very small. A good magnetic coupling is achieved resulting in effective transmission of power. Several pistons (16) abutting one another can be used for conveying heavy loads.

A Linear Motor Operable by a Pressure Medium

a Field of the Invention

a Background of the Invention

The invention relates to a ~~linear motor~~ magnetically coupled arrangement operable by a pressure medium, and for use in a conveying system.

B Magnetically coupled arrangements ~~linear motors~~ of this type are primarily used in conveying systems, having a driven assembly connected with a carriage for the goods to be conveyed. In this way, even goods of large size can be conveyed in a way similar to a pneumatic tube conveyor system.

B In order to ensure trouble-free operation, the known ~~linear motor~~ magnetically coupled arrangement requires a greater degree of radial play between the adjacent surfaces of the magnet arrangements and the tube. It was generally agreed that this would be the only way of coping with the unavoidable surface roughness and cross-sectional irregularities of the tube. On the other hand, in the interests of increasing the magnetic drive force between the piston and the driven assembly, the total air gap between the two magnet arrangements would have to be kept as small as possible. A design incorporating a small air gap would require smaller, and thus lighter and substantially cheaper magnet arrangements than those used to date to achieve the required drive force between the piston and the driven assembly of the linear motor.

It was recognised that the non-magnetic materials available today have surface qualities good enough to enable by this alone a substantial reduction in the air gaps between magnet arrangements and tube surfaces in comparison with prior art, though unacceptable faults invariably developed in practical operation. These faults, however, have now been found to be due not to surface roughness and cross-sectional irregularities (superior surface quality can now be achieved even in butt-welded tube sections), but rather to the presence of dirt and impurities on the tube surfaces, which cannot pass through the small gaps between magnet arrangements and tube surfaces but tend to be wedged in said gaps.

B According to the present invention there is provided a ~~linear motor~~ magnetically coupled arrangement for use in a conveying system, said motor being operable by a pressure medium and comprising a tubular part connectible to a source of the pressure medium, a piston which is slidable in said tubular part and which has sealing means at each end for wiping engagement with an internal surface of the tubular part and so as to form a seal for the pressure medium, and a driven assembly which is slidable on the tubular part and which has means at each end for wiping engagement with an external surface of the tubular part, the piston and the driven assembly each carrying a drive magnet arrangement in the form of a hollow cylindrical assembly, each magnet arrangement having radial play relative to the adjacent surface of the tubular part, and surfaces of the magnet arrangements which face the tubular part being closely adjacent to the respective surfaces of the tubular part.

Preferably the wiping means of the driven assembly and the sealing means of the piston lie in the same plane transversal to the axis of the tubular part. The contact pressure of the wiping means and sealing means does not exert a torsional deforming moment on the tubular part, which should preferably have thin walls in order to ensure a small total air gap between the two magnet arrangements.

Preferably also, the sealing means of the piston comprise sealing rings and the piston is provided with sliding guide rings near the sealing rings. The advantage of this is that a relatively soft material can be used for the piston sealing rings, which no longer have to perform any significant guiding functions. In this way, friction losses in the motor can be reduced to a minimum.

The tubular part may be made of a thin, stainless material such as non-magnetic special steel, brass or a plastics material, and water or a mixture of water and oil may be used as the pressure medium. The movement of the piston and of the driven assembly is initiated immediately the pressure medium is admitted and stopped as soon as the admission of pressure medium ceases, which permits extremely accurate positioning of the driven assembly by controlling the pressure medium supply. The pressure of the medium does not have to be high, since the piston is moved more by being carried along in the medium flow than by the admission of differential pressure.

If the driven assembly is provided with a sleeve made of a magnetisable material, which encircles the hollow cylindrical assembly of the magnet arrangement, magnetic leakage fields in the vicinity of the driven assembly can be kept to a minimum. In this way, undesirable braking forces, which would otherwise be generated while piston and driven assembly pass magnetisable machine components, are avoided. By selecting a non-magnetisable material for the piston body, a more inhomogeneous magnetic field is generated in the space defined by the driven assembly, a favourable development in the interests of increasing the drive force.

Advantageously the magnet arrangements are represented by radially polarised annular magnets arranged in axial sequence and separated from each other by non-magnetisable spacer rings. The segmented structure of the magnet arrangements contributes to the creation of an axially inhomogeneous magnetic field, which again increases the drive force exerted on the driven assembly by the piston.

If the piston carries a flexible buffer at each end, the peripheral surface of which is spaced radially from the internal surface of the tubular part, the piston can be stopped very accurately by running into a rigid obstacle. A further advantage of this development lies in the fact that a piston of large overall axial dimensions can be constructed, which can pass through curved tube sections inspite of the small radial distance between the internal magnet arrangement and the internal tube surface. In this

way a long magnetically coupled arrangement ~~linear motor~~ comprising articulated piston sections and corresponding magnetically coupled driven assemblies tiltable relative to each other is achieved. With a magnetically coupled arrangement ~~linear motor~~ of this design, a large load is distributed over a long tube section, the drive force between piston and driven assembly is satisfactory, and the piston can pass through curved tube sections.

Brief Description of the Drawings

An embodiment of the invention will now be described by way of example only with reference to the accompanying drawing, the single figure of which is a perspective view of a magnetically coupled arrangement ~~linear motor~~ according to the invention, a section of the driven assembly and of the tube having been removed to show details of the piston.

Detailed Description

The drawing illustrates a magnetically coupled arrangement ~~linear motor~~ operated by a pressure medium, a relatively thin-walled and narrow tube 10 being made of a stainless, non-magnetic material such as non-magnetic special steel, brass or a plastics material, if preferred with glass reinforcement. The tube is made up of butt-welded or joined tube segments 12a, 12b joined by welds 14 which do not result in any surface irregularities in the internal or the external tube surface. Within the tube 10, which may be connected to a pressure medium source or sink at either or both ends, a piston 16 is movably arranged. A driven assembly 18 is movably mounted on ~~passing along~~ the outside of the tube 10. A carriage for the goods to be conveyed, which is not illustrated here, can be attached to the driven assembly 18.

The piston 16 comprises a piston body made of aluminium or another light-weight non-magnetic material. This piston carries permanent annular magnets 20 which are arranged in axial sequence, and which are radially polarised and separated by spacers 22. At each end of the annular magnet arrangement which forms a hollow cylindrical assembly, the piston body is provided with sliding guide rings 24 partially seated in grooves on said piston body and projecting beyond the piston body surface, which sliding guide rings pass along the internal tube surface in a sliding fit. Outside, if viewed axially, of these sliding guide rings 24 are arranged elastomeric sealing rings 26, also seated in grooves on the piston body. Each end face of the piston carries a buffer 28, by which the piston 16 can be brought to a halt against a fixed stop, not illustrated here. These buffers 28 further serve in mechanically linking several pistons 16, as will be described in more detail below.

The external surface areas of the annular magnets 20 are very close to the internal surface of the tube 10. Since, however, the annular magnet arrangement 20 is enclosed on each side by a sliding guide ring 24 and a sealing ring 26, any impurities left in the tube 10 from its manufacturing process or carried along with the pressure medium, (preferably oil or a mixture of 95 % water and 5 % oil), cannot penetrate into the small gap between the outside of the annular magnet arrangement of the piston and the inside of the tube. Such impurities might otherwise result in the piston 16 seizing in the tube 10.

Instead, any such impurities are pushed along in front of the piston 16 by the sealing rings 26 or - should they manage to get past these - by the sliding guide rings 24, so that the annular magnet arrangement is invariably faced by a clean section of the internal tube wall.

The design of the driven assembly 18 of the linear motor is essentially the inverse of the piston 16, the mirror image being a cylindrical surface midway between the external and the internal tube surfaces. The counterpart of the piston body is a sleeve 30 made of a magnetisable material to reduce magnetic leakage fields. The sleeve 30 encloses permanent annular magnets 32 arranged in axial sequence, which magnets are radially polarised in the same direction as the annular magnets 20 and separated by spacers 34. The annular magnets 32 are clamped between two end faces 38 likewise made of a magndisable material and bolted to the sleeve 30 by way of elastomeric thrust rings 36.

The end faces 38 have a central opening 40 encircling the tube 10 with little play, and in the peripheral inner surface of each end face 38, which is coated with a low friction material such as tetrafluorethylene, is provided an inwardly opening groove 42 in which a wiper ring 44 is located. These wiper rings 44 ensure, in the case of the driven assembly 18, that the internal surface area of the hollow cylindrical magnet arrangement 32 is very close to the external surface of the tube 10, and that no foreign bodies can penetrate into the narrow gap between the annular magnets 32 and the tube surface. Any such foreign bodies,

which commonly collect on tube surfaces not protected from the surrounding atmosphere, are pushed away by the wiper rings 44 before reaching the annular magnets 32.

Since the overall "air" gap between the internal magnet arrangement represented by the annular magnets 20 and the external magnet arrangement represented by the annular magnets 32 (this being made up of the distance between the annular magnets 20 and the internal tube surface, the wall thickness of the tube 10 and the distance between the annular magnets 32 and the external tube surface) can now be kept very small (there is no need for small foreign bodies to pass through between the magnet arrangements and the tube surfaces), a very good magnetic coupling can be achieved between the two annular magnet arrangements, resulting in effective transmission of the power provided by the pressure medium to the driven assembly.

As the illustration shows, there is a flush radial arrangement of the wiper rings 44 and the sealing rings 26, so that the contact force does not exert any torsional moment on the tube. This enables easy movement of the piston and the driven assembly along curved tube sections.

The magnetically coupled arrangement described above is easily adapted for transporting heavier loads. Two pistons 16 are axially arranged in a tube section with auxiliary venting, the pistons butting against each other by their buffers 28, and driven assembly is provided for each piston to be automatically aligned with the corresponding piston by magnetic force. The carriage for the goods is then pivotally mounted on each of the driven assemblies. In this way, the two pistons now effectively form a piston of double (triple etc.) length with "articulated"

individual pistons (held in contact by pressure), ensuring synchronous movement of the two (three etc.) driven assemblies. In this way, the weight of the load to be conveyed is distributed over a long tube section without, however, creating any passage problems such as would occur when using correspondingly long pistons and driven assemblies in conjunction with the small air gaps between magnet arrangements and tube surfaces which are specified in the invention. Even passage along curved tube sections is possible, which would not be the case with one-piece pistons and driven assemblies of corresponding length.

It is obvious that this effective lengthening of the driving and the load carrying assemblies can be achieved, without in any way modifying the standard components of the B magnetically coupled arrangement ~~linear motor~~, i.e. piston 16, driven assembly 18, for example on site and after completion of the initial installation. The distribution of the load over a longer section of the tube 10 is of special importance in the case of thin tubes, which in turn are preferable from the point of view of the magnetic coupling between piston and driven assembly. Thin plastic tubes, otherwise being an excellent solution owing to their surface properties, tend to have inferior load carrying capacity, which is why articulated piston and driven assembly arrangements are especially suitabl for tubes of this kind.

To stop the driven assembly at a certain point, a position transmitter acting on the pressure medium supply for the tube 10 is installed. This transmitter may either

respond mechanically or optically to the approach of the driven assembly, or can alternatively be an inductive transmitter or a transmitter responding to magnetic leakage fields, e. g. a reed switch.

Various modifications may be made without departing from the invention.

Although a particular preferred embodiment of the invention has been disclosed in detail for illustrative purposes, it will be recognized that variations or modifications of the disclosed apparatus, including the rearrangement of parts, lie within the scope of the present invention.

The embodiments of the invention in which an exclusive property or privilege is claimed are defined as follows:

1. A linear motor for use in a conveying system, said motor being operable by a pressure medium and comprising a tubular part connectible to a source of the pressure medium, a piston which is slidable in said tubular part and which has sealing means at each end for wiping engagement with an internal surface of the tubular part and so as to form a seal for the pressure medium, and a driven assembly which is slidable on the tubular part and which has means at each end for wiping engagement with an external surface of the tubular part, the piston and the driven assembly each carrying a drive magnet arrangement in the form of a hollow cylindrical assembly, each magnet arrangement having radial play relative to the adjacent surface of the tubular part, and surfaces of the magnet arrangements which face the tubular part being closely adjacent to the respective surfaces of the tubular part.

2. A linear motor according to claim 1, wherein the wiping means of the driven assembly are formed as wiper rings which are seated in annular grooves opening inwardly on radial end walls of the driven assembly.

3. A linear motor according to claim 1 or 2, wherein the wiping means of the driven assembly and the sealing means of the piston lie in the same plane transversal to the axis of the tubular part.

4. A linear motor according to any of claims 1 to 3, wherein the sealing means of the piston comprise sealing rings and the piston is provided with sliding guide rings near the sealing rings.

5. A linear motor according to any of the preceding claims, wherein the tubular part is made of a thin, stainless material such as non-magnetic special steel, brass or a plastics material, and wherein water or a mixture of water and oil is used as the pressure medium.

6. A linear motor according to any of the preceding claims, wherein the tubular part comprises a plurality of tube segments butt welded to each other.

7. A linear motor according to any of the preceding claims, wherein the wiping means and the sealing means are formed of a pliable, elastic material.

8. A linear motor according to any of the preceding claims, wherein the driven assembly is provided with a sleeve made of a magnetisable material, which encircles the hollow cylindrical assembly of the magnet arrangement.

9. A linear motor according to any of the preceding claims, wherein the piston has a body made of a non-magnetisable material.

A linear motor according to any of the preceding claims, wherein the magnet arrangements are represented by radially polarised annular magnets arranged in axial sequence and separated from each other by non-magnetisable spacer-rings.

Sub. a6

~~11. A linear motor according~~ to any of the preceding claims, wherein the piston carries a flexible buffer at each end, the peripheral surface of which is spaced radially from the ~~internal surface of the tubular part.~~

~~12. A linear motor~~ according to claim 11, which comprises a plurality of pistons, the buffers of which butt against each other, and an equivalent number of driven assemblies, ~~each of the latter corresponding to one of the pistons.~~

add a 1

UNITED STATES OF AMERICA

EIDESSTATTLICHE ERKLÄRUNG UND VOLLMACHT FÜR ERSTANMELDUNGEN *(GERMAN LANGUAGE DECLARATION FOR ORIGINAL PATENT APPLICATION)*	ATTORNEY'S DOCKET NO. (IF ANY) M&R Case 28

Als nachstehend benannter Erfinder erkläre ich hiermit an Eides Statt:
dass mein Wohnsitz, meine Postanschrift und meine Staatsangehörigkeit den im Nachstehenden nach meinem Namen aufgeführten Angaben entsprechen;
dass ich nach meinem besten Wissen und Glauben der ursprüngliche, erste und alleinige Erfinder (falls nachstehend nur ein Name angegeben ist) oder Miterfinder (falls nachstehend mehrere Erfinder benannt sind) der Erfindung unter dem Titel:

"Druckmittelbetätigter Linearmotor"

[the invention entitled: A Linear Motor Operable by a Pressure Medium]

bin, die in der beiliegenden Patentanmeldung beschrieben und beansprucht wird; dass ich den Inhalt dieser beiliegenden Patent anmeldung voll verstehe; dass der Inhalt derselben nach meinem besten Wissen und Glauben noch nie vor meiner oder unserer Erfindung ihres Gegenstandes in den Vereinigten Staaten von Amerika bekannt war oder benutzt oder patentiert oder vor meiner oder unserer Erfindung oder vor mehr als einem Jahr vor dem Tag dieser Anmeldung in irgendeinem Land in irgendwelchen gedruckten Veröffentlichungen beschrieben wurde; dass dieselbe vor mehr als einem Jahr vor dem Tag ihrer Anmeldung in den Vereinigten Staaten von Amerika weder in öffentlichem Gebrauch war noch zum Verkauf angeboten wurde; dass diese Erfindung vor dem Tag inhrer Anmeldung in keinem ausländischen Land ausserhalb der Vereinigten Staaten von Amerika patentiert wurde oder der Gegenstand einer Erfinder-Urkunde in einer Patentanmeldung war, die von mir oder von meinen gesetzlichen Vertretern oder Rechtsnachfolgern vor mehr als zwölf Monaten vor dem Tag dieser Anmeldung hinterlegt wurde; dass ich hiermit meine Pflicht zur Offenbarung irgendwelcher mir bekannter Informationen anerkenne, die für die Prüfung der vorliegenden Anmeldung von Wichtigkeit sind; und dass vor dem Tag dieser Anmeldung von mir oder meinen gesetzlichen Vertretern oder Rechtsnachfolgern mit Ausnahme der nachstehend angeführten Patentanmeldung(en) für diese Erfindung in keinem Land ausserhalb der Vereinigten Staaten von Amerika eine Anmeldung für ein Patent oder eine Erfinder-Urkunde für diese Erfindung hinterlegt worden ist:

COUNTRY	APPLICATION NUMBER	DATE OF FILING (day, month, year)	PRIORITY CLAIMED UNDER 35 U.S.C. 119
Germany	P 29 22 444.0	1.6.1979	YES X NO
			YES NO

Ich beauftrage hiermit den nachstehend benannten Patentanwalt (oder die nachstehend benannten Patentanwälte) und/oder Patent-Agenten mit der Verfolgung der vorliegenden Patentanmeldung sowie mit der Abwicklung aller damit verbundenen Geschäfte vor dem Paten- und Warenzeichen-Amt:

Raywood H. Blanchard (Reg. No. 16 383), L. Martin Flynn (Reg. No. 17 835), Dale H. Thiel (Reg. No. 24 323), David G. Boutell (Reg. No. 25 072) and Ronald J. Tanis (Reg. No. 22 724)

[POWER OF ATTORNEY: Raywood H. Blanchard (Reg. No. 16 383), L. Martin Flynn (Reg. No. 17 835), Dale H. Thiel (Reg. No. 24 323), David G. Boutell (Reg. No. 25 072) and Ronald J. Tanis (Reg. No. 22 724)]

Bitte alle Telephongespräche unter Rufnummer (616) 381-1156 an den Rechtsanwalt, der den Anmeldungsuebermittlungsbrief unterschreibt richten.

[Address all telephone calls to attorney signing the application transmittal letter at telephone no. (616) 381-1156]

Postzustellanschrift: BLANCHARD, FLYNN, THIEL, BOUTELL & TANIS
2026 Rambling Road, Kalamazoo, Michigan 49008

[Address all correspondence to BLANCHARD, FLYNN, THIEL, BOUTELL & TANIS
2026 Rambling Road, Kalamazoo, Michigan 49008]

(Provide equivalent information in English between brackets)

FORM PTO-2041 (10-77)

Patent & TM Office - U.S. COMM-D.C.

EIDESSTATTL... ERKLÄRUNG UND VOLLMACHT FÜR ERSTANMELDUNGEN

(German Language Declaration for Original Patent Application)

Page 2

Ich erkläre hiermit des weiteren, dass alle von mir in der vorliegenden Erklärung gemachten Angaben nach meinem besten Wissen und Glauben der vollen Wahrheit entsprechen, und dass ich diese eidesstattliche Erklärung in Kenntnis dessen abgebe, dass wissentlich und vorsätzlich falsche Angaben gemäss Paragraph 1001, Abschnitt 18 der Zivilprozessordnung der Vereinigten Staaten von Amerika (United States Code) mit Geldstrafe belegt und/oder Gefängnis bestraft wereden können, und dass derartig wissentlich und vorsätzlich falsche Angaben die Gültigkeit der vorliegenden Patentanmeldung oder eines darauf erteilten Patentes gefährden können.

VOLLER NAME DES EINZIGEN ODER URSPRÜNGLICHEN ERFINDERS	FULL NAME OF SOLE OR FIRST INVENTOR
Kurt Stoll	
UNTERSCHRIFT DES ERFINDERS DATUM	
K. Stoll 5.5.80	
WOHNSITZ	RESIDENCE
Esslingen	
STAATSANGEHÖRIGKEIT	CITIZENSHIP
German	
POSTANSCHRIFT	POST OFFICE ADDRESS
Lanzhalde72	
D-7300 Esslingen	

VOLLER NAME DES ZWEITEN MITERFINDERS (FALLS ZUTREFFEND)	FULL NAME OF SECOND JOINT INVENTOR, IF ANY
UNTERSCHRIFT DES ERFINDERS DATUM	
WOHNSITZ	RESIDENCE
STAATSANGEHÖRIGKEIT	CITIZENSHIP
POSTANSCHRIFT	POST OFFICE ADDRESS

(Falls dritte und weitere Miterfinder, die vorstehenden Angaben bitte durch entsprechende Informationen zur Person dieser Erfinder und Unterschriften ergänzen)

Patent & TM Office - U.S. COMM-D.C.

PRINT OF DRAWING
AS ORIGINALLY FILED

Leonhard Himmelsbach
P.O. Box 28
Ann Arbor

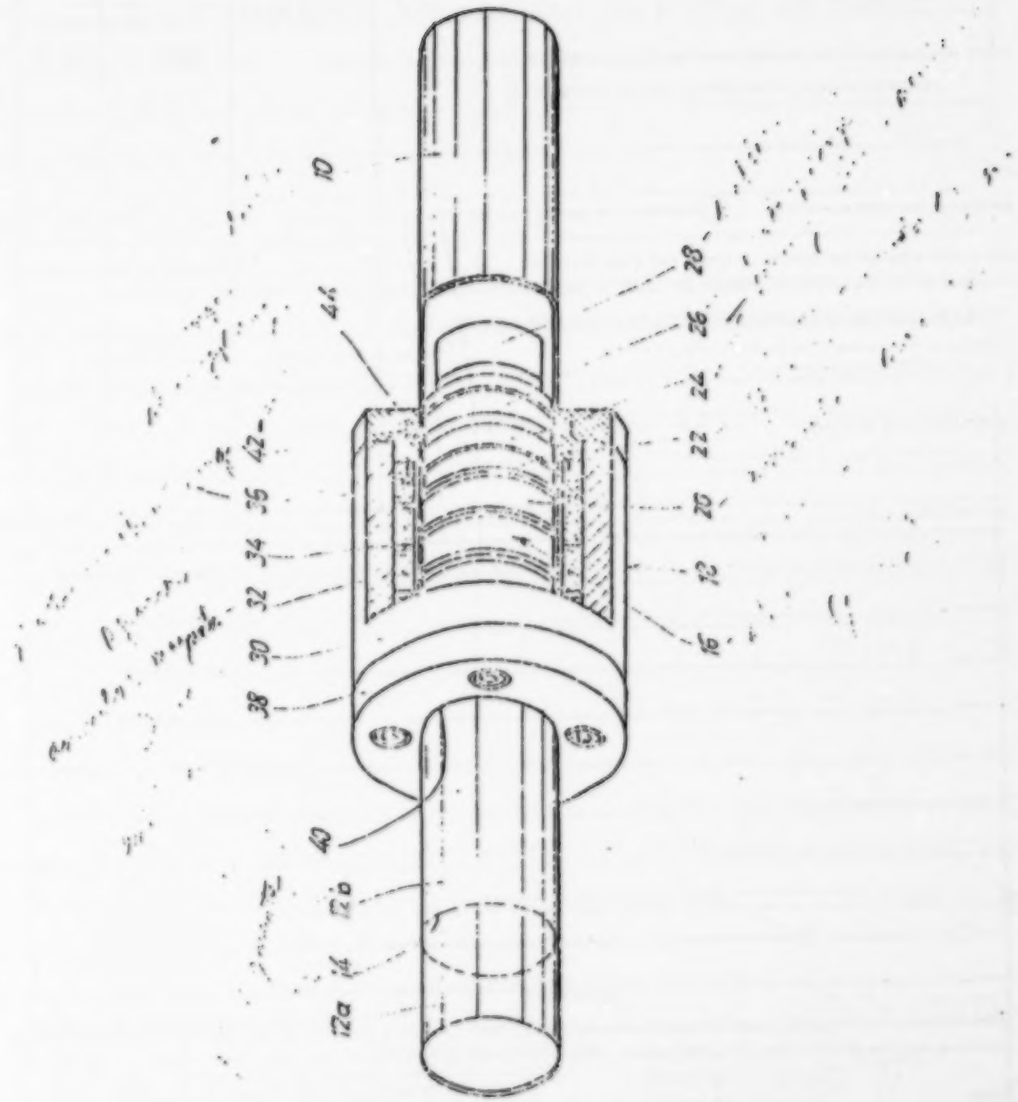

1-1

UNITED STATES DEPARTMENT OF COMMERCE
Patent and Trademark Office

Address: COMMISSIONER OF PATENTS AND TRADEMARKS
Washington, D.C. 20231

SERIAL NUMBER	FILING DATE	FIRST NAMED APPLICANT	ATTORNEY DOCKET NO.
06/153,999	05/28/80	STOLL K	M&R CASE 28

BLANCHARD, FLYNN, THIEL,
BOUTELL & TANIS
2026 RAMBLING RD,
KALAMAZOO, MI 49008

EXAMINER	
ART UNIT	PAPER NUMBER
212	2

DATE MAILED: ~~07/01/81~~ JUL 2 1981

This is a communication from the examiner in charge of your application.

COMMISSIONER OF PATENTS AND TRADEMARKS

☑ This application has been examined. ☐ Responsive to communication filed on _____ ☐ This action is made final.

A shortened statutory period for response to this action is set to expire 3 month(s), _____ days from the date of this letter.
Failure to respond within the period for response will cause the application to become abandoned. 35 U.S.C. 133

Part I THE FOLLOWING ATTACHMENT(S) ARE PART OF THIS ACTION:

1. ☑ Notice of References Cited by Examiner, PTO-892
2. ☐ Notice of Informal Patent Drawing, PTO-948
3. ☐ Notice of References Cited by Applicant, PTO-1449
4. ☐ Notice of Informal Patent Application, Form PTO-152
5. ☐ _____

Part II SUMMARY OF ACTION

1. ☑ Claims 1-12 are pending in the application.
   Of the above, claims _____ are withdrawn from consideration.
2. ☐ Claims _____ have been cancelled.
3. ☐ Claims _____ are allowed.
4. ☑ Claims 1-12 are rejected.
5. ☐ Claims _____ are objected to.
6. ☐ Claims _____ are subject to restriction or election requirement.
7. ☐ The formal drawings filed on _____ are acceptable.
8. ☐ The drawing correction request filed on _____ has been ☐ approved. ☐ disapproved.
9. ☑ Acknowledgment is made of the claim for priority under 35 U.S.C. 119. The certified copy has
   ☐ been received. ☑ not been received. ☐ been filed in parent application, serial no. _____,
   filed on _____.
10. ☐ Since this application appears to be in condition for allowance except for formal matters, prosecution as to the merits is closed in accordance with the practice under Ex parte Quayle, 1935 C.D. 11; 453 O.G. 213.
11. ☐ Other

PTOL-326 (rev. 7-79) **EXAMINER'S ACTION**

PTO-[redacted]

U.S. DEPARTMENT OF COMMERCE
Patent and Trademark Office

SERIAL NUMBER 153,999 GROUP ART UNIT 212

PART III

NOTIFICATION OF REJECTION(S) AND/OR OBJECTION(S) (35 USC 132)

	CLAIMS (1)	REASONS FOR REJECTION (2)	REFERENCES * (3)	INFORMATION IDENTIFICATION AND COMMENTS (4)
1	1-12	35 USC 112 (1ST PP)	—	EXACT METHOD OF OPERATION UNCLEAR. IS DEVICE A TRUE MOTOR OR MAGNETIC CLUTCH?
2	4-12	35 USC 112 (2ND PP)		IMPROPERLY MULTIPLY DEPENDENT
3				
4				
5	CITED REFS BELIEVED PERTINENT			

* Capital letters representing references are identified on accompanying Form PTO-892
The symbol "v" between letters represents - in view of -.
The symbol "+" or "&" between letters represents - and -.
A slash "/" between letters represents the alternative - or -.

NOTE: Sections 100, 101, 102, 103, and 112 of the Patent Statute (Title 35 of the United States Code) are reproduced on the back of this sheet.

EXAMINER Donovan F. Duggan TEL. NO. (703) — 557 5050
DONOVAN F. DUGGAN
PRIMARY EXAMINER
ART UNIT 212

2

FORM PTO-892 (REV. 3-78) U.S. DEPARTMENT OF COMMERCE PATENT AND TRADEMARK OFFICE

NOTICE OF REFERENCES CITED

SERIAL NO.	GROUP ART UNIT	ATTACHMENT TO PAPER NUMBER	
153,999	212		
APPLICANT(S) Stoll			

U.S. PATENT DOCUMENTS

*		DOCUMENT NO.	DATE	NAME	CLASS	SUB-CLASS	FILING DATE IF APPROPRIATE
✓	A	2998485	8/59	Richter et al.	36	104	
✓	B	1697142	1/29	Keller	310	104X	
✓	C	3847502	11/74	Isbell	318	104X	
	D						
	E						
	F						
	G						
	H						
	I						
	J						
	K						

FOREIGN PATENT DOCUMENTS

*		DOCUMENT NO.	DATE	COUNTRY	NAME	CLASS	SUB-CLASS	PERTINENT SHTS. DWG.	PERTINENT PP. SPEC.
	L								
	M								
	N								
	O								
	P								
	Q								

OTHER REFERENCES (Including Author, Title, Date, Pertinent Pages, Etc.)

R	
S	
T	
U	

EXAMINER	DATE
D. Duggan	2/82

* A copy of this reference is not being furnished with this office action. (See Manual of Patent Examining Procedure, section 707.05 (a).)

MAIL ROOM 11 OCT 2 1981 PAT. & TRADE MARK OFF.

Applicant : Kurt STOLL

Serial No.: 153 999 Group 212

Filed : May 28, 1980 Examiner D. Duggan

For : LINEAR MOTOR OPERABLE BY A PRESSURE MEDIUM

Honorable Commissioner of Patents and Trademarks

Washington, D. C. 20231

CERTIFICATE OF MAILING

Sir:

I hereby certify that this correspondence is being deposited with the United States Postal Service as first class mail in an envelope addressed to: Commissioner of Patents and Trademarks, Washington, D.C. 20231, on

SEP 30 1981.

BLANCHARD, FLYNN, THIEL, BOUTELL & TANIS, P.C.

Raywood H. Blanchard, Reg. No. 16 383
L. Martin Flynn, Reg. No. 17 835
Dale H. Thiel, Reg. No. 24 323
David G. Boutell, Reg. No. 25 072
Ronald J. Tanis, Reg. No. 22 724

EXAMINER OCT 5 1981

By: David G. Boutell
David G. Boutell

Date: SEP 30 1981

DGB/9
Correspondence: Request for First Extension of Time

#3

Applicant : Kurt Stoll
Serial No.: 153 999
Filed : May 28, 1980
For : LINEAR MOTOR OPERABLE BY A PRESSURE MEDIUM

September 30, 1981
Group 212
Examiner D. Duggan

Honorable Commissioner of Patents and Trademarks
Washington, D. C. 20231

REQUEST FOR FIRST EXTENSION OF TIME

Sir:

It is respectfully requested that the shortened period for a response, now set to expire on October 2, 1981, be extended to November 2, 1981.

In support of this request, it is pointed out that the undersigned receives instructions from a German patent agent concerning the filing and prosecution of this application. The instructions were received on Monday, September 28, which instructions were in the German language. There remains insufficient time for a translation to be made available to the undersigned attorney of record and for him in turn to study the translation and prepare a response for filing before the due date of October 2, 1981.

In view of these circumstances, it is believed that additional time for filing a response is in order. Accordingly, granting of this request is respectfully solicited.

Respectfully submitted,

OCT 5 1981

By
David G. Boutell
Reg. No. 25 072

BLANCHARD, FLYNN, THIEL,
BOUTELL & TANIS, P.C.
2026 Rambling Road
Kalamazoo, Michigan 49008

DGB/9

IN DUPLICATE

Encl. Stamped, self-addressed return envelope
Postal card

Telephone: (616) 381-1156

ONE MONTH EXTENSION
APPROVED BY ORDER OF THE
PRIMARY EXAMINER
, Clerk, Group 210
10/2/81

RECEIVED
NOV 6 1981
GROUP 210

Applicant : Kurt Stoll
Serial No.: 153 999
Filed : May 28, 1980
For : LINEAR MOTOR OPERABLE BY A PRESSURE MEDIUM

Group 212
Examiner D. Duggan

Honorable Commissioner of Patents and Trademarks
Washington, D. C. 20231

CERTIFICATE OF MAILING

Sir:

I hereby certify that this correspondence is being deposited with the United States Postal Service as first class mail in an envelope addressed to: Commissioner of Patents and Trademarks, Washington, D.C. 20231, on November 2, 1981.

BLANCHARD, FLYNN, THIEL, BOUTELL & TANIS, P.C.

Raywood H. Blanchard, Reg. No. 16 383
L. Martin Flynn, Reg. No. 17 835
Dale H. Thiel, Reg. No. 24 323
David G. Boutell, Reg. No. 25 072
Ronald J. Tanis, Reg. No. 22 724

By:
David G. Boutell

Date: November 2, 1981

DGB/9
Correspondence: Response dated November 2, 1981

PATENT & TRADE MARK OFFICE 11 4 1981

Applicant : Kurt Stoll

Serial No.: 153 999

Filed : May 28, 1980

For : LINEAR MOTOR OPERABLE BY A PRESSURE MEDIUM

November 2, 1981

Group 212

Examiner D. Duggan

RECEIVED NOV 6 1981 GROUP 210

Honorable Commissioner of Patents and Trademarks

Washington, D. C. 20231

Sir:

In response to the Office Action mailed July 2, 1981 the shortened period for a response having been extended to November 2, 1981, Applicant amends as follows:

IN THE SPECIFICATION

Please change the title to ---MAGNETICALLY COUPLED ARRANGEMENT FOR A DRIVING AND A DRIVEN MEMBER---.

Page 1, between the title and the first line of text; insert the subheading:

---FIELD OF THE INVENTION---.

between lines 2 and 3 of text; insert the subheading:

---BACKGROUND OF THE INVENTION---.

Page 5, between lines 7 and 8 of text; insert the subheading:

---BRIEF DESCRIPTION OF THE DRAWINGS---.

between lines 13 and 14 of text; insert the subheading:

---DETAILED DESCRIPTION---.

line 23; after "is" insert ---movably---.

line 24; change "passing along" to ---movably mounted on---.

Page 7, line 6; change "assomb-ly" to ---assembly---.

line 10; change "s" to ---a---.

line 14; change "12" to ---20---.

line 21; change "tetrafluoraethylene" to ---tetrafluoroethylene---.

Page 8, last line thereof; change "Gtriple" to ---triple---.

IN THE CLAIMS

Please cancel Claim 1 and substitute therefor the following:

In an arrangement having a hollow cylindrical tube and driving and driven members movable thereon for conveying articles, the improvement comprising wherein said tube is made of a nonmagnetic material, wherein said driving member is a piston movably mounted on the inside of said tube, said piston having a piston body and plural axially spaced, first permanent annular magnets encircling said piston body, said piston further including first means spacing said first permanent magnets in said axial spaced relation, the radially peripheral surface of said magnets being oriented close to the internal wall surface of said tube, said piston further including plural guide ring means encircling said piston body and slidingly engaging said internal wall and first sealing rings located axially outside said guide rings for wiping said internal wall as said piston moves along said tube to thereby cause any impurities that may be present in said tube to be pushed along said tube so that said first annular magnets will be free of interference from said impurities, wherein said driven member includes a cylindrical sleeve made of a magnetizable material and encircles said tube, said sleeve having plural axially spaced second permanent annular magnets affixed thereto and in magnetically attracting relation to said first permanent annular magnets and second means spacing said second permanent annular magnets in said axially spaced relation, the radially inner surface of said magnets being oriented close to the external surface of said tube, said sleeve having end face means with second sealing rings located axially outside said second permanent annular magnets for wiping the external wall surface of said tube as said driven member is moved along said tube in response to a driving movement of said piston to thereby cause any impurities that may be present on said tube to be pushed along said tube so that said second permanent

annular magnets will be free of interference from said impurities.

Please amend Claims 2 and 3 as follows:

-2- (Amended)

[A linear motor] The arrangement according to claim [1] ~~13~~, wherein [the wiping means of the] said sealing rings on said driven [assembly] member are formed as wiper rings which are seated in annular grooves opening inwardly on [radial] said end [walls] face means of [the] said driven assembly.

-3- (Amended)

[A linear motor] The arrangement according to claim [1 or 2] ~~13~~, wherein [the wiping means of the] said sealing rings on said driven assembly and [the] said sealing [means of the] rings on said piston lie in the same plane [transversal] perpendicular to the axis of [the tubular part] said tube.

Please cancel Claim 4 without prejudice.

Please amend Claim 5 as follows:

~~4~~ -5- (Amended)

[A linear motor] The arrangement according to [any of the preceding claims] claim ~~13~~, wherein [the tubular part] said tube is made of a thin [, stainless material such as] non-magnetic [special steel, brass or a plastics] material, and wherein water or a mixture of water and oil is used as the pressure medium.

Please cancel Claim 6 without prejudice.

Please amend Claim 7 as follows:

~~6~~ -7- (Amended)

[A linear motor] The arrangement according to [any of the preceding claims] claim ~~13~~, wherein [the wiping means and the] said sealing [means] rings are formed of a pliable, elastic material.

Please cancel Claim 8 without prejudice.

Please Claim 9 as follows:

~~8~~ -6- (Amended)

[A linear motor] The arrangement according to [any of the preceding claims] claim ~~13~~, wherein [the] said piston [has a] body is made of a non-magnetisable material.

Please cancel Claim ~~10~~ without prejudice.

Please amend Claim 11 as follows:

~~12~~ -7- (Amended)

[A linear motor] The arrangement according to [any of the preceding claims] claim ~~13~~, wherein [the] said piston [carries] has a flexible buffer at each end, the peripheral surface of which is spaced radially from the internal surface of [the tubular part] said tube.

Please cancel Claim ~~12~~ without prejudice.

In the Abstract of the Disclosure paragraph, please change the title to ---MAGNETICALLY COUPLED ARRANGEMENT FOR A DRIVING AND A DRIVEN MEMBER---.

line 1; change "linear motor" to ---magnetically coupled arrangement for a driving and a driven member,---.

after "which" insert ---arrangement---.

REMARKS

Claims 1, 4, 6, 8, 10 and 12 have been cancelled. Claim 13 has been added. Accordingly, Claim 13 and the claims which depend therefrom, namely, Claims 2, 3, 5, 7, 9 and 11 remain in this application and Applicant respectfully requests consideration thereof.

Each of the claims now present in this application has been reviewed for compliance with the provisions of Title 35 USC 112. Accordingly, further consideration of these claims, particularly with respect to the provisions of Title 35 USC 112, is respectfully solicited.

Applicant wishes to make of record German Offenlegungsschrift No. 27 37 924 and German Gebrauchsmuster No. 19 82 379. These references were cited in the first Office Action received

in the corresponding German application. These references are obviously clearly distinguishable over the subject matter of the claims now present in this application. Accordingly, further comment about the subject matter of these references is believed unnecessary. It is clear that neither of these two references discloses the use of structure preventing the interference by impurities located inside the tube and on the outside of the tube while the arrangement is moved along the tube.

Accordingly, and based upon the foregoing comments, further and favorable consideration of this application is respectfully solicited.

Respectfully submitted,

By David G. Boutell

David G. Boutell
Reg. No. 25 072

BLANCHARD, FLYNN, THIEL,
BOUTELL & TANIS, P.C.
2026 Rambling Road
Kalamazoo, Michigan 49008

DGB/9

Encl. Copy of German Offenlegungsschrift No. 27 37 924
Copy of German Gebrauchsmuster No. 19 82 379
Postal Card

Telephone: (616) 381-1156

E 5546

PATENTANWALT
Dipl.-Ing. PUCOU MAGENBAUER

2d 1.68

D 1033 - rele

DE-Gm 19 82 379

Dipl.-Ing. Kurt Stoll, Reslingen a. N.

Fördervorrichtung zum Transportieren des Fördergutes zwischen einer Ausgangsstellung und gegebenen End- oder Zwischenstellungen

Die Erfindung betrifft eine mit Hilfe eines Druckmediums als Bewegungserzeuger, z. B. eines pneumatischen oder hydraulischen Mediums betriebene Fördervorrichtung zum Transportieren des Fördergutes zwischen einer Ausgangsstellung und gegebenen End- oder Zwischenstellungen.

- 2 -

2d 1.68

- 2 -

Anordnungen der hier in Frage stehenden Art werden z. B. als aufzugartige Hubvorrichtungen, Hängefördrer, rohrpostartige Transportvorrichtungen usw. verwendet.

Die bekannten Anordnungen der vorgenannten Art haben einen komplizierten, mit großen Herstellungskosten verbundenen Aufbau und machen darüber hinaus einen relativ großen Anfand an Einbauraum erforderlich. U.a. auch aus diesem Grunde ist die Anwendung dieser bekannten Anordnungen beschränkt. Das Ziel der Erfindung besteht darin, hier Abhilfe zu schaffen.

Zu den oben genannten Zweck besitzt gemäß der Erfindung die neue Fördervorrichtung einen in einem Rohr oder Druck- oder Arbeitszylinder zwischen der Ausgangsstellung und der Endstellung unter Wirkung des Druckmediums hin und her beweglich geführten kolbenstangenlosen Kolben und eine außerhalb des Rohres oder Druck- oder Arbeitszylinders geführte, mit den Kolben in magnetischer Kraft- und Wirkverbindung stehende und hierbei mit diesen hin und her bewegliche Halterung für das Fördergut. Die neue Vorrichtung kann hierbei z. B. einen unter Einwirkung des Druckmediums hin und her beweglichen Kolben, ein den Kolben enthaltendes und führendes und hierbei in der Art eines Druck- oder Arbeitszylinders wirkendes Führungsrohr aus nichtmagnetischem Material mit Ein- und Auslassen für das Druckmedium, einen

- 3 -

Fig. 7 eine Abwandlung des Gegenstandes der Erfindung in einer Draufsicht in schematischer Darstellung und

Fig. 8 eine Variante zu der Anordnung nach Fig. 7 ebenfalls in einer Draufsicht in schematischer Darstellung.

Die erfindungsgemäße Anordnung enthält als wichtigste Teile einen Kolben 1, der unter Einwirkung des Druckmediums - Druckluft oder Druckflüssigkeit - gemäß Pfeil 2 hin und her beweglich ist, und ein Führungsrohr 3, das den Kolben enthält und führt und hierbei in der Art eines Druck- oder Arbeitszylinders wirkt und das demzufolge nicht weiter dargestellte Einlässe und Auslässe für das Druckmedium besitzt. Außerdem enthält die erfindungsgemäße Vorrichtung einen Innenmagneten 4, der mit dem Kolben fest verbunden ist und von innen her an der Rohrinnenwandung entlang berührungsfrei geführt ist, sowie einen Außenmagneten 5, der von außen her an der Rohraußenwandung entlang berührungsfrei geführt ist und dank der magnetischen Kraftverbindung zwischen ihm und dem Kolben mit diesem am Führungsrohr entlang beweglich ist. Mit dem Außenmagneten ist eine mit ihm hin und her bewegliche Halterung 6 für das Fördergut vorgesehen, die am Führungsrohr z. B. unter rollender Reibung geführt ist.

Bei der Ausführungsform nach Fig. 1 bis 3 besteht der Kolben 1 aus einem Kern 1a, der z. B. aus nichtmagnetisiertem Material, z.B. Kunststoff hergestellt werden kann, und aus Dichtungsringen 1b, 1c, die mit ihrer Aussenfläche oder Umfläche an der Rohrinnenwand anliegen und zum dichten Abschließen des Raumes 7 von Raum 8 innerhalb des Führungsrohres 3 dienen. Der Kolben trägt einen Innenmagneten 4, der in diesem Falle als Magnetring ausgebildet ist. Der Innenmagnet kann jedoch auch als magnetisches Formstück ausgebildet sein, wie z.B. bei 9 in Fig. 4a gezeigt ist. In diesem letzteren Falle ist der Kolben an der Innenwand des Führungsrohres mit Hilfe von mehreren Führungsrollen, z.B. drei Führungsrollen 10a, 10b, 10c gelagert, deren Drehachsen 11a, 11b, 11c quer zur Rohrlängsachse und unter einem Winkel zueinander verlaufen und die sich mit ihrem Umfang an der Rohrinnenwand abstützen. Diese Führungsrollen 10a, 10b, 10c sind am Kolben 12 so drehbar gelagert, daß ihre Längsmittelebenen sternartig zueinander verlaufen (Fig. 4 a) und hierbei jeweils einen Winkel von 120° miteinander bilden, wobei ihre Drehachsen nicht in einer einzigen gemeinsamen Ebene enthalten sind (Fig. 4 b). Bei der Anordnung nach Fig. 1 bis 3 ist der als langliches prismatisches Formstück ausgebildete Kolben im Bereich seiner beiden axialen Enden jeweils mit einem elastischen Dichtungsring 1b, 1c aus Gummi oder Kunststoffmaterial versehen, der

mit dem Kolben fest verbundenen und innen entlang der Rohrinnenwandung berührungsfrei geführten Innenmagneten, einen außen an der Außenwandung des Führungsrohres entlang in deren den Innenmagneten entsprechenden Bereich hin und her beweglich geführten Außenmagneten und eine zusammen mit dem Außenmagneten hin und her bewegliche Halterung für das Fördergut enthalten. Die erfindungsgemäße Anordnung, die sich durch einen denkbar einfachen Aufbau auszeichnet, macht es möglich, den Raumaufwand auf praktisch die Hälfte des Aufwandes bei üblichen bekannten Anordnungen herabzusetzen. So z.B. ist bei aufzugartigen Vorrichtungen, Hubtischen usw. nur noch eine der Hublänge entsprechende Einbaulänge erforderlich, während bei den bekannten vergleichbaren Anordnungen die Einbaulänge etwa doppelt so groß wie die Hublänge ist, weswegen man in diesen Fällen manchmal den Antriebszylinder in den Boden eingräbt. Mit der erfindungsgemäßen Anordnung wird der Anwendungsbereich von pneumatischen oder hydraulischen Arbeitszylindern in Fällen der oder in Frage stehenden Art wesentlich erweitert, da man nunmehr mit überlangen Kolbenstangen, z.B. von 10 m und mehr arbeiten kann, ohne Instabilität zu befürchten, während bei bekannten Anordnungen eine Kolbenstangenlänge von maximal 2 - 3 m möglich ist. Die Halterung der erfindungsgemäßen Anordnung ist auch an Kurven bewegbar, wobei die Führung einfach ist, während bei Hängeförderern im Falle von Kurven eine seitliche Reibung des ziehenden Elementes auftritt.

In der Zeichnung sind Ausführungsbeispiele des Gegenstandes der Erfindung dargestellt. Es zeigen:

Fig. 1 eine erste Ausführungsform des Gegenstandes der Erfindung in einer Seitenansicht in Teildarstellung in einem senkrechten Schnitt,

Fig. 2 die Anordnung nach Fig. 1 in einem Schnitt gemäß der Linie II-II der Fig. 1,

Fig. 3 die Anordnung nach Fig. 1 in einem Schnitt gemäß der Linie III-III der Fig. 1,

Fig. 4 a eine abgewandelte Ausführungsform des Gegenstandes der Erfindung in einer Darstellungsweise entsprechend derjenigen nach Fig. 2,

Fig. 4 b die Anordnung nach Fig. 4 a in einer Seitenansicht,

Fig. 5 eine abgewandelte Ausführungsform des Gegenstandes der Erfindung in einer Darstellungsweise entsprechend derjenigen nach Fig. 3,

Fig. 6 eine weitere Variante des Erfindungsgegenstandes in Teildarstellung in einem senkrechten Schnitt,

durch aus, daß eine wesentlich größere magnetische Kraft aufgewendet werden kann. Das neue System könnte in Übrigen auch in senkrechter Richtung arbeiten.

Das Trag- und Führungsrohr besteht zweckmäßigerweise aus Kunststoffmaterial oder z.B. auch aus Messing, also insgesamt aus einem nicht magnetischen Werkstoff.

Man kann die Innen- und/oder Außenmagnete als Permanentmagnete ausführen, man kann sie jedoch auch als Elektromagnete einstellbarer Stärke ausbilden. Schließlich kann man die Innen- und/oder Außenmagnete auch aus einer permanentmagnetischen Partie und einer ganz oder teilweise beliebig zu- und abschaltbaren elektromagnetischen Partie herstellen. Diese letztere Variante des Erfindungsgegenstandes gibt die Möglichkeit, die magnetische Kraft den jeweiligen Erfordernissen anzupassen.

Das Trag- und Führungsrohr kann gemäß Fig. 7 geradlinig verlaufen, derart, daß die Bewegungsbahn der Halterung für das Fördergut zwischen der Ausgangsstellung A und der Endstellung B in gerader Richtung gemäß Pfeil 25 verläuft (Fig. 7). Die Bewegungsbahn kann jedoch auch gekrümmt sein. Im Extremfall kann sie gemäß der Anordnung nach Fig. 8 die Form eines Kreises oder einer Ellipse haben, derart, daß die Halterung für das Fördergut sich entlang am ellipsenartig geformten Trag- und Führungsrohr 26, also entlang einer endlosen Bahn bewegen kann.

Ansprüche

1. Mit Hilfe eines Druckmediums als Bewegungserzeuger, z. B. eines pneumatischen oder hydraulischen Mediums, betriebene Fördervorrichtung zum Transportieren des Fördergutes zwischen einer Ausgangsstellung und gegebenen End- oder Zwischenstellungen, dadurch gekennzeichnet, daß sie einen in einem Rohr oder Druck- oder Arbeitszylinder zwischen der Ausgangsstellung und der Endstellung hin und her beweglich geführten kolbenstangenlosen Kolben und eine außerhalb des Rohres oder Druck- oder Arbeitszylinders geführte, mit dem Kolben in magnetischer Kraft- und Wirkverbindung stehende und hierbei mit diesem hin und her bewegliche Halterung für das Fördergut besitzt.

2. Fördervorrichtung nach Anspruch 1, dadurch gekennzeichnet, daß sie einen unter Einwirkung des Druckmediums hin und her beweglichen Kolben, ein den Kolben enthaltendes und führendes und hierbei in der Art eines Druck- oder Arbeitszylinders wirkendes Führungsrohr aus nicht-magnetischem Material mit Ein- und Auslassen für das Druckmedium, einen mit dem Kolben fest verbundenen und innen entlang der

II-45

mit seinem Außenumfang an der Rohrinnenwand anliegt. Der Kolben trägt zwischen seinen Enden den ringartig ausgebildeten Innenmagneten 4.

Bei der Anordnung nach Fig. 1 bis 3 ist der Außenmagnet 5 als magnetisches Formstück ausgebildet, dessen dem Führungsrohr 3 zugewandte wirksame Fläche p a den zugeordneten Abschnitt des Rohrumfangs entsprechend ausgebildet und hierbei nach dem Magnetinneren gewölbt oder segmentartig ausgeschnitten ist. Eine solche Ausbildung des Aussenmagneten ist auch bei den Magneten 13 der Anordnung nach Fig. 4 a, 4b gezeigt. Der Außenmagnet kann jedoch auch als das Führungsrohr in koaxialer Anordnung umgebender Ring ausgebildet sein. So kann er als ein nicht völlig geschlossener Ring ausgebildet sein, wie er bei 14 dargestellt ist, der sich z.B. nur über 3/4 des Umfangs des Führungsrohres 15 erstreckt. Gemäß Fig. 6 kann der Außenmagnet auch als völlig geschlossener Ring 16 ausgebildet sein, der das Führungsrohr 17 ganz umschließt. Während bei der Anordnung nach Fig. 5 Platz für Halterungen des Führungsrohres innerhalb der Bewegungsbahn des Magneten vorhanden ist, vgl. z.B. die Halterungen 18 in Fig. 5 oder die Halterung 19 in Fig. 3, ist die Anordnung gemäß Fig. 6 für Fälle gedacht, bei denen das Führungsrohr, das sich nur über eine kurze axiale Länge erstreckt, an seinen beiden Enden gehaltert ist, wobei die Transportbewegung zwischen diesen beiden Enden stattfindet, so daß die Halterungen die

Bewegung des Außenmagneten 16 in keiner Weise stören. Bei den Anordnungen nach Fig. 5 und 6 ist im übrigen der Innenmagnet ebenfalls als völlig geschlossener Ring 20 bzw. 21 ausgebildet.

Bei der Anordnung nach Fig. 1 bis 3 ist die Halterung 6 als an Führungsrohr 3 verschieblich geführtes Formstück ausgebildet, dessen mittlerer Bereich den Außenmagneten 5 trägt und das mit der Lastaufnahme verbunden ist. Die Last wirkt in diesem Falle gemäß Pfeil 22. Diese Halterung 6 ist an Führungsrohr mit Hilfe von zwei Rollen 23a, 23b gelagert, die drehbar sind und sich mit ihren profilierten Außenumfang an Führungsrohr 3 abstützen. Bei der Anordnung nach Fig. 5 hingegen ist das Anbringen von solchen Führungsrollen als tragendes Element nicht erforderlich, da der Innenring und der Außenring koaxial ineinander gelagert und somit selbstzentrierend angeordnet sind, derart, daß der Luftspalt zwischen ihnen an allen Seiten annähernd gleich ist. Es findet z.B. somit keine Reibung während der Bewegung statt. Aus diesem Grunde dienen die Rollen 24a, 24b bzw. die Rollenpaare, die jeweils Rollen 24a, 24b enthalten, nicht als Abstützrollen, wie bei der Ausführungsform nach Fig. 1 bis 3, sondern nur noch als Tragrollen für die Last. Diese Anordnung, bei der das Führungsrohr 15 einerseits als Führungselement und andererseits als tragendes Element wirkt und darüber hinaus beim Antrieb mitwirkt, zeichnet eine da-

II-44

10. Fördervorrichtung nach Anspruch 8 oder 9, dadurch gekennzeichnet, daß der vorteilhaft länglich prismatische Kolben in den Bereichen seines vorderen und seines hinteren axialen Endes jeweils einen Dichtungsring trägt, der mit seiner äußeren Umfläche an der Rohrinnenwand anliegt.

11. Fördervorrichtung nach einem der Ansprüche 1 bis 7, dadurch gekennzeichnet, daß der als vorteilhaft länglich-prismatisches Formstück ausgebildete Kolben in Bereich seiner beiden axialen Enden jeweils einen mit seinem Außenumfang an der Rohrinnenwand anliegenden Dichtungsring, z.B. aus Gummi oder Kunststoffmaterial und zwischen seinen Enden den ringartig ausgebildeten Innenmagneten trägt.

12. Fördervorrichtung nach einem der Ansprüche 1 bis 11, dadurch gekennzeichnet, daß die Halterung am Führungsrohr unter rollender Reibung geführt ist.

13. Fördervorrichtung nach Anspruch 12, dadurch gekennzeichnet, daß die Halterung als am Führungsrohr mit Hilfe von zwei im Bereich ihres vorderen und ihres hinteren Endes drehbar gelagerten Führungsrollen oder Führungsrollenpaaren verschieblich geführtes Formstück ausgebildet ist, dessen mittlerer Bereich den Außenmagneten trägt und mit der Lastaufnahme verbunden ist.

14. Fördervorrichtung nach einem der Ansprüche 1 bis 13, dadurch gekennzeichnet, daß die Halterung am Führungsrohr führungsrollenlos allein unter Wirkung des entwickelten magnetischen Kraftflusses geführt ist.

15. Fördervorrichtung nach einem der Ansprüche 1 bis 14, dadurch gekennzeichnet, daß der Innen- und/oder Außenmagnet als Permanentmagnet ausgebildet ist.

16. Fördervorrichtung nach einem der Ansprüche 1 bis 14, dadurch gekennzeichnet, daß der Innen- und/oder Außenmagnet als Elektromagnet einstellbarer Stärke ausgebildet ist.

17. Fördervorrichtung nach einem der Ansprüche 1 bis 14, dadurch gekennzeichnet, daß der Innen- und/oder Außenmagnet aus einer permanentmagnetischen Partie und einer ganz oder teilweise beliebig zu- und abschaltbaren elektromagnetischen Partie besteht.

II-47

Führungsrohres erstreckender magnetischer Ring ausgebildet ist.

7. Fördervorrichtung nach einem der Ansprüche 1 bis 4, dadurch gekennzeichnet, daß der Außenmagnet als das Führungsrohr in koaxialer Anordnung umschließender, völlig geschlossener Ring ausgebildet ist.

8. Fördervorrichtung nach einem der Ansprüche 1 bis 7, dadurch gekennzeichnet, daß der Kolben in seinem mittleren Bereich den Innenmagneten trägt und im übrigen an der Innenwand des Führungsrohres mit Hilfe von mehreren, z.B. drei Führungsrollen verfahrbar gelagert ist, deren Drehachsen einerseits etwa quer zur Rohrlängsachse und andererseits unter einem Winkel zueinander verlaufen und die sich mit ihren Umfang an der Rohrinnenwand abstützen.

9. Fördervorrichtung nach Anspruch 8, dadurch gekennzeichnet, daß am Kolben drei Führungsrollen drehbar gelagert sind, deren Längsmittelebenen sternartig zueinander verlaufen und hierbei jeweils einen Winkel von 120° miteinander bilden, wobei zweckmäßig ihre Drehachsen nicht in einer einzigen gemeinsamen Ebene enthalten sind.

Rohrinnenwandung berührungsfrei geführten Innenmagneten, einen außen an der Außenwandung des Führungsrohres entlang in deren dem Innenmagneten entsprechenden Bereich hin und her beweglich geführten Außenmagneten und eine zusammen mit den Außenmagneten hin und her bewegliche Halterung für das Fördergut enthält.

3. Fördervorrichtung nach Anspruch 1 oder 2, dadurch gekennzeichnet, daß der Innenmagnet als Magnetring ausgebildet ist.

4. Fördervorrichtung nach Anspruch 1 oder 2, dadurch gekennzeichnet, daß der Innenmagnet als magnetisches Formstück ausgebildet ist.

5. Fördervorrichtung nach einem der Ansprüche 1 bis 4, dadurch gekennzeichnet, daß der Außenmagnet als magnetisches Formstück ausgebildet ist, dessen dem Führungsrohr zugewandte wirksame Fläche dem zugeordneten Abschnitt des Rohrumfangs entsprechend ausgebildet, z.B. nach dem Magnetinneren zu gewölbt oder segmentartig ausgeschnitten ist.

6. Fördervorrichtung nach einem der Ansprüche 1 bis 4, dadurch gekennzeichnet, daß der Außenmagnet als ein das Führungsrohr in koaxialer Anordnung umgebender, nicht völlig geschlossener, sich z.B. nur über 3/4 des Umfangs des

II-46

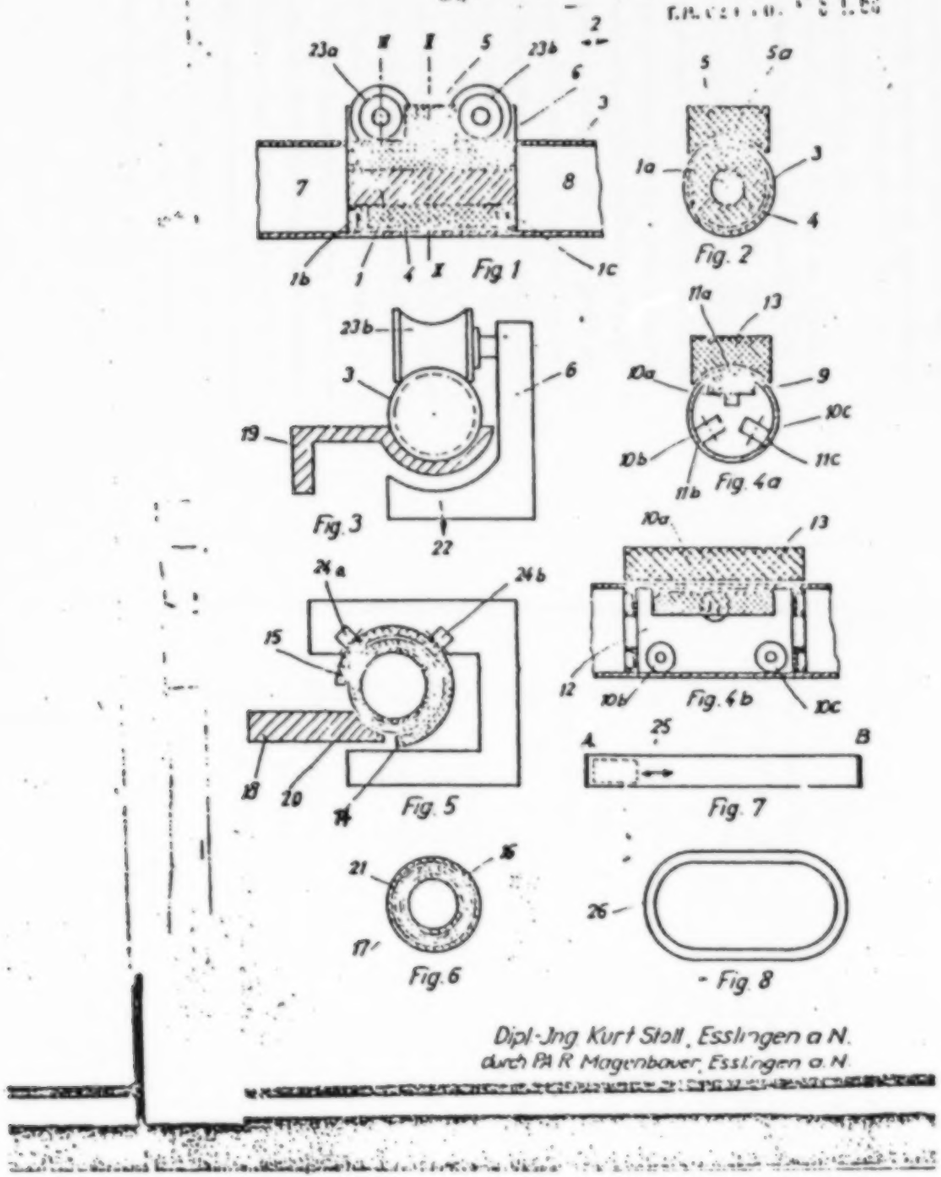

g 7726 087.8

10.August 1977

D 5578 - fual

DE-OS 27 37 924

Festo-Maschinenfabrik Gottlieb Stoll, 7300 Esslingen

Rohrpostartige Transportvorrichtung

Ansprüche

1. Rohrpostartige Transportvorrichtung mit einem Rohr, in dem ein kolbenartiges Teil mit Hilfe eines vorzugsweise pneumatischen Druckmediums zwischen einer Ausgangsstellung und gegebenen Zwischen- und/oder Endstellungen hin und her bewegbar ist, wobei die zu transportierende Last mit bewegt wird, dadurch gekenn-

zeichnet, daß am Aussenumfang des aus unmagnetischem Material hergestellten Rohres (12) ein Wagen (21) hin und her bewegbar geführt ist und daß das kolbenartige Teil (13) und der Wagen (21) einen Innen- bzw. Aussenmagneten (17,27) besitzen, welche Magnete eine Bewegungskopplung der beiden bewegbaren Teile bewirken.

2. Vorrichtung nach Anspruch 1, dadurch gekennzeichnet, daß die Magnete (17,27) bezüglich der Rohrwandung berührungsfrei geführt sind.

3. Vorrichtung nach Anspruch 1 oder 2, dadurch gekennzeichnet, daß der Innen- oder Aussenmagnet (17,27) als geschlossener oder einseitig geschlitzter Magnetring (17,27) ausgebildet ist bzw. sind, wobei die Magnetringe koaxial zueinander sind.

4. Vorrichtung nach einem der vorhergehenden Ansprüche, dadurch gekennzeichnet, daß der Wagen (21) als einseitig geschlitzter Ring ausgebildet ist und über den Umfang gleichmäßig verteilt vorzugsweise drei Laufrollenpaare (22,23) besitzt.

5. Vorrichtung nach Anspruch 4, dadurch gekennzeichnet, daß der Wagen (21) oben- oder untenseitig mit einer Halterung (21) für die zu transportierende Last (28) versehen ist.

6. Vorrichtung nach Anspruch 4 oder 5, dadurch gekennzeichnet, daß der Wagen (21) in einem Umfangsbereich geschlitzt ist, in dem Stützen (14) am Rohr (12) angreifen.

7. Vorrichtung nach einem der vorhergehenden Ansprüche, dadurch gekennzeichnet, daß das kolbenartige Teil (13) beidendig mit an der Rohrinnenwandung anliegenden, radial wirkenden Ringdichtungen (18) versehen ist.

8. Vorrichtung nach einem der vorhergehenden Ansprüche, dadurch gekennzeichnet, daß die Magnete (17,27) als Permanent- und/oder einstellbare Elektromagnete ausgebildet sind.

10.August 1977

D 5578- fual

Festo-Maschinenfabrik Gottlieb Stoll, 7300 Esslingen

Rohrpostartige Transportvorrichtung

Die Erfindung bezieht sich auf eine rohrpostartige Transportvorrichtung mit einem Rohr, in dem ein kolbenartiges Teil mit Hilfe eines vorzugsweise pneumatischen Druckmediums zwischen einer Ausgangsstellung und gegebenen Zwischen- und/oder Endstellungen hin und her bewegbar ist, wobei die zu transportierende Last mitbewegt wird.

Bei den bekannten sogenannten Rohrpostvorrichtungen sind verschließbare Hülsen vorgesehen, in die der zu transportierende Gegenstand eingesteckt wird und die dann

mittels eines pneumatischen Druckmediums in ihre andere Endstellung transportiert werden. Diese Vorrichtungen haben den Nachteil, daß die zu transportierenden Gegenstände volumenmäßig sehr begrenzt sind. Darüber hinaus ist das Öffnen und Schließen der Transporthilfe relativ zeitraubend und umständlich, Solche Rohrpostvorrichtungen werden deshalb nur zum Transport von Papieren u.dgl. über relativ lange Wege eines Gebäudes verwendet. Für kurze Wege und zum Transport von schwereren und größeren Lasten, beispielsweise zur innerbetrieblichen Förderung von Arbeitsplatz zu Arbeitsplatz sind Vorrichtungen bekannt, die beispielsweise mit Hilfe eines pneumatischen Zylinders oder mit Hilfe einer Kette über einen Antriebsmotor angetrieben werden. Pneumatische Zylinder haben jedoch den Nachteil, daß sie nur etwa bis zu einem Hub von 2 m wirtschaftlich einsetzbar sind. Kettenantriebe und ähnliche Vorrichtungen haben den Nachteil, daß sie sehr geräuschvoll arbeiten.

Eine Aufgabe der vorliegenden Erfindung ist es, eine rohrpostartige Transportvorrichtung der eingangs genannten Art zu schaffen, mit der relativ große Gegenstände problemlos, beispielsweise für den innerbetrieblichen Ablauf, hin und her befördert werden können.

Zur Lösung dieser Aufgabe ist erfindungsgemäß vorgesehen, daß am Umfang des aus unmagnetischem Material hergestellten Rohres ein Wagen hin und her bewegbar geführt ist und daß das kolbenartige Teil und der Wagen einen Innen- bzw.

Aussenmagneten besitzen, welche Magnete eine Bewegungskopplung der beiden bewegbaren Teile bewirken.

Die erfindungsgemäße Vorrichtung kann also einen ähnlich unkomplizierten Aufbau wie eine Rohrpostvorrichtung besitzen, ist aber hinsichtlich der zu transportierenden Gegenstände und Lasten praktisch nicht beschränkt. Die erfindungsgemäße Vorrichtung kann man beispielsweise zur innerbetrieblichen Förderung von Arbeitsplatz zu Arbeitsplatz einsetzen, beispielsweise in Form eines Schrägaufzuges oder in anderer Weise. Sie ist ferner geräuscharm und stellt sich im Gegensatz zur bekannten Rohrpost als vom pneumatischen Antriebsmedium her geschlossenes System dar, so daß sie einen denkbar einfachen Aufbau besitzen kann und keine Abdichtungsprobleme bestehen.

Weitere Einzelheiten und Ausgestaltungen der Erfindung sind der folgenden Beschreibung zu entnehmen, in der die Erfindung anhand des in der Zeichnung dargestellten Ausführungsbeispieles näher beschrieben und erläutert wird. Es zeigen:

Fig. 1 einen Querschnitt durch die Transportvorrichtung gemäß einem Ausführungsbeispiel vorliegender Erfindung und

Fig. 2 einen Längsschnitt durch die Transportvorrichtung nach Fig. 1.

Die erfindungsgemäße rohrpostartige Transportvorrichtung 11 besitzt ein Rohr 12 aus einem unmagnetischen Material, innerhalb dem ein kolbenartiges Teil 13 gemäß Pfeil A unter der Einwirkung eines hydraulischen oder pneumatischen Druckmediums, vorzugsweise Druckluft, hin und her bewegbar ist. Das Führungsrohr 12, das einen relativ kleinen Innendurchmesser von etwa 25 mm besitzen kann, kann nahezu jede beliebige Art der Wegführung besitzen. Es kann also beispielsweise längs einer geraden Strecke, längs einer Schleife, eben, geneigt oder in sonstiger Weise geführt und ausgebildet sein. Bei längeren Wegstrecken ist es zweckmäßig, wie aus Fig. 2 ersichtlich, das Führungsrohr 12 in konstantem Abstand durch eine Stütze 14 abzustützen.

Das kolbenartige Teil 13 besitzt einen Kern 16 aus unmagnetischem Material, um den ein Magnetring 17 angeordnet ist. An beiden Stirnenden des Magnetrings 17 ist der Kern 16 von radial wirkenden Ringdichtungen 18 umgeben, die sich dichtend an die Innenwandung des Rohrs 12 anlegen und gleichzeitig zur Führung des Teils 13 dienen. Die Anordnung der einzelnen Elemente des Teiles 13 ist dabei so getroffen, daß der Magnetring 17 zur Innenwandung des Rohrs 12 einen kleinen Ringspalt besitzt, also berührungsfrei innerhalb des Führungsrohres 12 gehalten ist. Der Kern 16 bildet an seinen beiden Stirnseiten 19 die Angriffsfläche für das vorzugsweise pneumatische Druckmedium.

Aussenumfangsseitig ist das Führungsrohr 12 von einem Wagen 21 umgeben, der die Form eines geschlitzten Ringes besitzt und ebenfalls aus unmagnetischem Material hergestellt ist. Der Wagen 21 besitzt an drei vorzugsweise in konstantem Abstand angeordneten Umfangsbereichen eine vordere und eine hintere Lauf- und Führungsrolle 22,23, mit denen der Wagen 21 längs des Rohres 12 leicht verfahrbar ist. Die Rollen 22,23 sind radial gerichtet, wobei ihre Drehachsen 24 quer zur Bewegungsrichtung angeordnet sind. Im Umfangsbereich der am Rohr 12 angreifenden Stützen 14 ist der Wagen 21 mit einem Schlitz 26 versehen, der vorzugsweise schräg nach unten, vorzugsweise spitzwinklig zur Senkrechten verläuft. Innenumfangsseitig ist am Wagen 21 ein äußerer Magnetring 27 gehalten, der koaxial zum Innenmagnetring 17 angeordnet ist und zu diesem den Gegenmagneten darstellt. Auch der Aussenmagnetring 27 ist derart gehalten, daß sein Innenumfang mit dem Aussenumfang des Rohres 12 einen Spalt bildet, so daß er bezüglich des Rohres 12 berührungsfrei gehalten ist. Beim dargestellten Ausführungsbeispiel wird die Last 28 mittels einer geeigneten Haltevorrichtung 29 nach unten hängend am Wagen 21 gehalten bzw. befestigt. Es versteht sich, daß eine entsprechende Halte- oder Aufnahmevorrichtung auch oben, seitlich oder an einem anderen beliebigen Umfangsbereich des Wagens 21 vorgesehen sein kann. Es ist auch möglich, eine oder zwei Haltevorrichtungen stirnseitig am Wagen anzubringen..

Die beiden Magnetringe 17 und 27 sind derart aufeinander abgestimmt, daß sich eine praktisch bewegungsstarre Kopplung des Wagens 21 mit dem pneumatisch angetriebenen Teil 23 ergibt, so daß der Wagen 21 synchron mit dem Antrieb des Innenteils 13 durch beispielsweise Druckluft hin und her verfahren wird. Die Innen- und/oder Aussenmagnete 17,27 können als Permanentmagnete oder auch als Elektromagnete mit einstellbarer Stärke ausgebildet sein. Es ist auch möglich, Permanent- und Elektromagnete miteinander derart zu kombinieren, daß die Grundlast von Permanentmagneten übernommen wird, während für andere Fälle Elektromagnete beliebig zu- und abgeschaltet werden.

Es versteht sich, daß es auch möglich ist, den Magneten 17 und 27 eine andere Form zu geben. Beispielsweise ist es möglich, statt eines Ringes mehrere über den Umfang verteilt angeordnete Magnete vorzusehen. Es ist ferner auch möglich, dem Wagen 21 eine andere Form zu geben, beispielsweise ihn galgenförmig an das Rohr anzuhängen.

Es versteht sich ferner, daß das Führungsrohr 12 als geschlossenes System ausgebildet ist, das beid-endig mit Ein- und Auslaßöffnungen für das Druckmedium versehen ist. Es ist auch möglich, je nach Länge des Führungsrohres an Zwischenstationen absperrbare Ein- und Auslässe für das Druckmedium vorzusehen.

T11

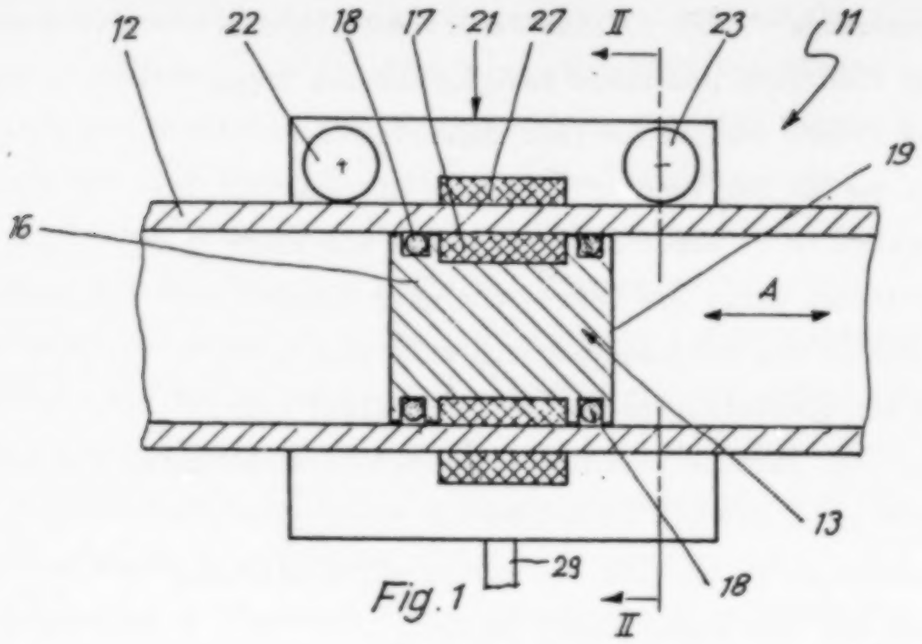

Fig. 1

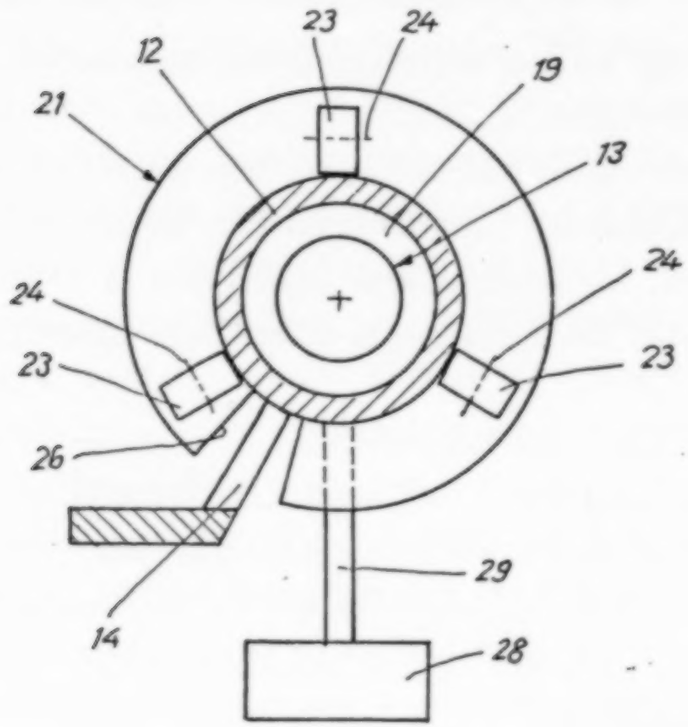

Fig. 2

055481

UNITED STATES DEPARTMENT OF COMMERCE
Patent and Trademark Office

Address: COMMISSIONER OF PATENTS AND TRADEMARKS
Washington, D.C. 20231

SERIAL NUMBER	FILING DATE	FIRST NAMED APPLICANT	ATTORNEY DOCKET NO.
16/153,999	05/29/80	STOLL R	PKR CASE 28

BLANCHARD, FLYNN, THIEL,
BOUTELL & TANTS
2026 RAMBLING RD.
KALAMAZOO, MI 49008

EXAMINER	
DUGGAN, D	
ART UNIT	PAPER NUMBER
212	5

DATE MAILED: 11 MAR 1982

This is a communication from the examiner in charge of your application.

COMMISSIONER OF PATENTS AND TRADEMARKS

☐ This application has been examined. ☑ Responsive to communication filed on 11/4/82 ☐ This action is made final.

A shortened statutory period for response to this action is set to expire 2 month(s), — days from the date of this letter.
Failure to respond within the period for response will cause the application to become abandoned. 35 U.S.C. 133

Part I THE FOLLOWING ATTACHMENT(S) ARE PART OF THIS ACTION:

1. ☑ Notice of References Cited by Examiner, PTO-892
2. ☐ Notice of Informal Patent Drawing, PTO-948
3. ☐ Notice of References Cited by Applicant, PTO-1449
4. ☐ Notice of Informal Patent Application, Form PTO-152
5. ☐ _____

Part II SUMMARY OF ACTION

1. ☑ Claims 13, 2, 3, 5, 7, 9, 11 are pending in the application.
   Of the above, claims _____ are withdrawn from consideration.
2. ☐ Claims _____ have been cancelled.
3. ☑ Claims 13, 2, 3, 5, 7, 9, 11 are allowed.
4. ☐ Claims _____ are rejected.
5. ☑ Claims 13, 2, 3, 5, 7, 9, 11 are objected to.
6. ☐ Claims _____ are subject to restriction or election requirement.
7. ☐ The formal drawings filed on _____ are acceptable.
8. ☐ The drawing correction request filed on _____ has been ☐ approved. ☐ disapproved.
9. ☐ Acknowledgment is made of the claim for priority under 35 U.S.C. 119. The certified copy has
   ☐ been received. ☐ not been received. ☐ been filed in parent application, serial no. _____,
   filed on _____.
10. ☒ Since this application appears to be in condition for allowance except for formal matters, prosecution as to the merits is closed in accordance with the practice under Ex parte Quayle, 1935 C.D. 11; 453 O.G. 213.
11. ☐ Other

PTOL 326 (rev. 7-78)

EXAMINER'S ACTION

This application appears to be in condition for allowance except for the following formal matters, all references to "linear motors" in the specfification should be deleted inasmuch as such nomenclature connotes a different device having different operational characteristics.

The cited references are believed of interest.

Prosecution as to the merits is closed in accordance with the practice under ex parte Quayle, 1935 C.D. 11, 453 O.G. 213.

A SHORTENED STATUTORY PERIOD FOR RESPONSE TO THIS ACTION IS SET TO EXPIRE TWO MONTHS FROM THE DATE OF THIS LETTER.

Duggan:go

703/557/5050

2/10/82

DONOVAN F. DUGGAN
PRIMARY EXAMINER
ART UNIT 212

MAR 23 1982

MAR 30 1982

Applicant : Kurt Stoll

Serial No.: 153 999 Group 212

Filed : May 28, 1980 Examiner D. Duggan

For : MAGNETICALLY COUPLED ARRANGEMENT FOR A DRIVING AND A DRIVEN MEMBER

Honorable Commissioner of Patents and Trademarks

Washington, D. C. 20231

CERTIFICATE OF MAILING

Sir:

I hereby certify that this correspondence is being deposited with the United States Postal Service as first class mail in an envelope addressed to: Commissioner of Patents and Trademarks, Washington, D.C. 20231, on

March 22, 1982.

BLANCHARD, FLYNN, THIEL, BOUTELL & TANIS, P.C.

Raywood H. Blanchard, Reg. No. 16 383
L. Martin Flynn, Reg. No. 17 835
Dale H. Thiel, Reg. No. 24 323
David G. Boutell, Reg. No. 25 072
Ronald J. Tanis, Reg. No. 22 724

By: David G. Boutell
David G. Boutell, Reg. No. 25 072

Date: March 22, 1982

Correspondence: Response dated March 22, 1982.

Applicant : Kurt Stoll
Serial No.: 153 999
Filed : May 28, 1980
For : MAGNETICALLY COUPLED ARRANGEMENT FOR A DRIVING AND A DRIVEN MEMBER

March 22, 1982
Group: 212
Examiner: D. Duggan

Honorable Commissioner of Patents and Trademarks
Washington, D. C. 20231

Sir:

In response to the Office Action mailed March 11, 1982, Applicant amends as follows:

IN THE SPECIFICATION

Page 1, line 2; change "linear motor" to ---magnetically coupled arrangement---
line 5; change "Linear motors" to ---Magnetically coupled arrangements---
line 11; change "linear motor" to ---magnetically coupled arrangement---
Page 2, line 14; change "linear motor" to ---magnetically coupled arrangement---
Page 5, line 1; change "linear motor" to ---magnetically coupled arrangement---
line 4; change "linear motor" to ---magnetically coupled arrangement---
line 12; change "linear motor" to ---magnetically coupled arrangement---
line 16; change "linear motor" to ---magnetically coupled arrangement---
Page 7, line 6,7; change "linear motor" to ---magnetically coupled arrangement---
Page 8, line 21; change "linear motor" to ---magnetically coupled arrangement---
Page 9, line 15; change "linear motor" to ---magnetically coupled arrangement---

REMARKS

Applicant acknowledges with thanks the allowance of Claims 13, 2, 3, 5, 7, 9, and 11. The foregoing amendment to the specification deletes all references to "linear motors"

and replaces same with "magnetically coupled arrangements". Accordingly, it is respectfully submitted that the issues in this application have all been resolved.

Accordingly, issuance of the formal Notice of Allowance is respectfully solicited.

Respectfully submitted,

BLANCHARD, FLYNN, THIEL,
BOUTELL & TANIS, P.C.

David G. Boutell
Reg. No. 25 072
2026 Rambling Road
Kalamazoo, Michigan 49008

DGB/5

Encl. Postal Card

UNITED STATES DEPARTMENT OF COMMERCE
Patent and Trademark Office

Address: COMMISSIONER OF PATENTS AND TRADEMARKS
Washington, D.C. 20231

NOTICE OF ALLOWANCE AND BASE ISSUE FEE DUE

BLANCHARD, FLYNN, THIEL,
BOUTELL & TANTR
2026 RAMBLING RD,
KALAMAZOO, MI 49008

All communications regarding this application should give the serial number, date of filing, name of applicant, and batch number.

Please direct all communications to the Attention of "OFFICE OF PUBLICATIONS" unless advised to the contrary.

The application identified below has been examined and found allowable for issuance of Letters Patent. PROSECUTION ON THE MERITS IS CLOSED.

	SC/SERIAL NO.	FILING DATE	TOTAL CLAIMS	DATE MAILED	EXAMINER AND GROUP ART UNIT
	06/153,999	05/28/80	007	06/02/82	DUGGAN, D 212
First Named Applicant	STOLL, KURT				

TITLE OF INVENTION (This may have been amended by Exam): MAGNETICALLY COUPLED ARRANGEMENT FOR A DRIVING AND A DRIVEN MEMBER

BASE FEE COMPUTATION			BASE FEE DUE	ATTY'S DOCKET NO.	CLASS - SUBCLASS	BATCH NO
$100 +	2	(for dwg. @ $2 per sheet) + $10 =	112	M&R CASE 2A	310-103.000	KB5

The complete Issue Fee is one hundred dollars ($100) plus two dollars ($2) for each sheet of drawing, plus ten dollars ($10) for each printed page of specification (including claims) or portion thereof. Inasmuch as the final number of printed pages cannot be determined in advance of printing, an initial BASE ISSUE FEE (consisting of the fee for printing the first page of specification ($10) plus the fee of ($2) for each sheet of drawing, added to the fee of $100) MUST BE PAID WITHIN THREE MONTHS FROM THE DATE OF THIS NOTICE, or the application shall be regarded as ABANDONED. The Base Issue Fee will not be accepted from anyone other than the applicant; a registered attorney or agent; or the assignee or other party in interest as shown by the records of the Patent and Trademark Office.

In order to minimize delays in the issuance of a patent based on this application, this Notice may have been mailed prior to completion of final processing by the Examining Group. It is recognized that the nature and/or extent of the remaining revision or processing requirements may cause slight delays in the printing of the patent. In addition, if prosecution is to be reopened, this Notice of Allowance will be vacated and the appropriate Office action will follow in due course. If the base issue fee has already been paid and prosecution is reopened, the applicant may request a refund or request that the fee be credited to a Deposit Account. However, applicant may wait until the application is either found allowable or held abandoned. If allowed, upon receipt of a new Notice of Allowance, applicant may request that the previously submitted base issue fee be applied. If abandoned, applicant may request refund or credit to a Deposit Account.

In the case of each patent issuing without an assignment, the complete post office address of the inventor(s) will be printed in the patent heading and in the Official Gazette. If the inventor's address is now different from the address which appears in the application, please fill in the information in the spaces provided on PTOL-85c enclosed. If there are address changes for more than two inventors, enter the additional addresses on the reverse side of the PTOL-85c.

The appropriate spaces in the ASSIGNMENT DATA section of PTOL-85b must be completed in all cases. If it is desired to have the patent issue to an assignee, an assignment must have been previously submitted to the Patent and Trademark Office or must be submitted herewith as required by 37 C.F.R. 1.334. Where there is an assignment, the assignee's name and address must be provided on the PTOL-85b to insure its inclusion in the printed patent.

Advance orders for 10 or more printed copies of the prospective patent can be made by completing the information in Section 4 of PTOL-85b and submitting payment therewith. If use of a Deposit Account is being authorized for payment, PTOL-85c should also be forwarded. The order must be for at least 10 copies and must accompany the issue fee. The copies ordered will be sent only to the address specified in section 1 or 1A of PTOL-85b.

If an additional fee is due, a Notice of Balance of Issue Fee Due will be mailed together with the patentee's copy of the patent. Payment must be made within three months from the date shown on said Notice since FAILURE TO PAY THIS BALANCE WITHIN THE SPECIFIED PERIOD WILL RESULT IN LAPSE OF THE PATENT.

☐ Note attached communication from Examiner.

☐ This notice is issued in view of applicant's communication filed _____

IMPORTANT

ATTENTION IS DIRECTED TO 37 C.F.R. 1.334

THE PATENT WILL ISSUE TO APPLICANT UNLESS AN ASSIGNEE IS SHOWN IN ITEM 3 ON FORM PTOL-85b, ATTACHED

PATENT AND TRADEMARK OFFICE COPY

UNITED STATES DEPARTMENT OF COMMERCE
Patent and Trademark Office

Address: COMMISSIONER OF PATENTS AND TRADEMARKS
Washington, D.C. 20231

SERIAL NUMBER	FILING DATE	FIRST NAMED APPLICANT	ATTORNEY DOCKET NO.

EXAMINER	
ART UNIT	PAPER NUMBER

DATE MAILED:

This is a communication from the examiner in charge of your application.

COMMISSIONER OF PATENTS AND TRADEMARKS

1. [X] THIS IS AN ATTACHMENT TO THE NOTICE OF ALLOWANCE AND BASE ISSUE FEE DUE, PTOL 85.
2. [ ] All the claims being allowable, PROSECUTION ON THE MERITS IS CLOSED in this application. If not attached hereto, a Notice of Allowance or other appropriate communication will be sent in due course.

   A. [ ] Note the attached PTO-152, Notice of Informality, which indicates that the declaration (or oath) is deficient and that a substitute is required. The substitute declaration (or oath) MUST BE SUBMITTED WITHIN THE THREE MONTH STATUTORY PERIOD SET FOR PAYMENT OF THE BASE ISSUE FEE IN THE "NOTICE OF ALLOWANCE AND BASE ISSUE FEE DUE" (PTOL-85), preferably with and attached to the base issue fee. Note that the statute does not permit extension of the three month period set for payment of the base issue fee. Failure to timely file the substitute declaration (or oath) will result in ABANDONMENT of the application. The transmittal letter accompanying the declaration (or oath) should indicate the following in the upper right hand corner:
   Issue Batch Number; Date of the Notice of Allowance, and Serial Number.

   B. [ ] Formal drawings are now required and MUST BE SUBMITTED WITHIN THE THREE MONTH STATUTORY PERIOD SET FOR PAYMENT OF THE BASE ISSUE FEE IN THE "NOTICE OF ALLOWANCE AND BASE ISSUE FEE DUE" (PTOL-85). Note that the statute does not permit extension of the three month period set to pay the base issue fee. Failure to timely submit the drawings will result in ABANDONMENT of the application. The drawings should be submitted as a separate paper with a transmittal letter which is addressed to the Official Draftsman and which indicates the following in the upper right hand corner:
   Issue Batch Number; Date of the Notice of Allowance, and Serial Number.

   C. [X] The claims are allowed in view of:
      a. [X] Applicant's communication filed 3/23/82.
      b. [ ] The interview summarized on the attached EXAMINER INTERVIEW SUMMARY RECORD, PTOL-413.
      c. [ ] The attached Examiner's Amendment. Should the changes and/or additions be unacceptable to applicant, an appropriate amendment may be proposed as provided by 37 CFR 1.312. To ensure consideration of such an amendment, it MUST be submitted before, or with, payment of the Base Issue Fee.
      d. [ ] An Examiner's Amendment which will follow in due course.

   D. [ ] The allowed claims are _____

3. [ ] Note the attached Examiner's Statement of Reasons for Allowance. Any comments considered necessary by applicant regarding the reasons for allowance must be submitted no later than the payment of the Base Issue Fee, preferably with it, to avoid processing delays. Such submissions should be clearly labeled, "Comments on Statement of Reasons for Allowance".
4. [ ] Note attached NOTICE OF REFERENCES CITED, PTO-892, which is part of this communication. The listed references are considered to be pertinent to the claimed invention, but the claims are deemed to be patentable thereover.
5. [ ] Note attached LIST OF ART CITED BY APPLICANT, PTO-1449, which is part of this communication and serves as an acknowledgment of receipt of applicant's prior art statement. The references which were considered have been initialed on the form by the examiner, and the claims are deemed patentable thereover.
6. [ ] The drawings filed on _____ [ ] are acceptable as filed. [ ] are acceptable subject to correction as indicated on the attached Notice re Drawings, PTO-948. In order to avoid ABANDONMENT of this application, correction is required. Corrections can only be made in accordance with the instructions set forth in the attached letter "INFORMATION ON HOW TO EFFECT DRAWING CHANGES", PTO-1474.
7. [ ] The [ ] proposed drawing correction and/or the [ ] proposed additional or substitute sheet(s) of drawings filed on _____ has (have) been approved by the examiner. Applicant is reminded that in order to avoid abandonment of this applicant, execution of the proposed changes or submission of additional or substitute drawings MUST be made in accordance with the instructions set forth in the letter, "INFORMATION ON HOW TO EFFECT DRAWING CHANGES", PTO-1474, attached to Paper No. _____
8. [ ] The proposed drawing correction, filed _____, has been approved. However, the Patent and Trademark Office no longer makes drawing changes. It is now applicant's responsibility to ensure that the drawings are corrected. Corrections are required and MUST be effected in accordance with the instructions set forth on the attached letter "INFORMATION ON HOW TO EFFECT DRAWING CHANGES", PTO-1474.
9. [ ] In order to avoid ABANDONMENT, the drawing informalities noted on the Notice re Drawing, PTO-948, attached to Paper No. _____ must now be corrected. Applicant is reminded that the corrections can only be made in accordance with the instructions set forth in the letter "INFORMATION ON HOW TO EFFECT DRAWING CHANGES", PTO-1474, attached to the PTO-948.
10. [ ] Acknowledgment is made of the claim for priority under 35 U.S.C. 119. The certified copy has: [ ] been received. [ ] not been received.
    [ ] been filed in parent application, Serial No. _____ filed on _____

Donovan F. Duggan

DONOVAN F. DUGGAN
PRIMARY EXAMINER
ART UNIT 212

NOTICE OF ALLOWABILITY

PTOL-37 (REV. 3-82)

USCOMM-DC 82-P829

JUN 14 1982 PAT & TRADE

Applicant : Kurt Stoll

Serial No.: 153 999 Group 212

Filed : May 28, 1980 Examiner D. Duggan

For : MAGNETICALLY COUPLED ARRANGEMENT FOR A DRIVING AND A DRIVEN MEMBER
Batch K85

Honorable Commissioner of Patents and Trademarks

Washington, D. C. 20231

CERTIFICATE OF MAILING

Sir:

I hereby certify that this correspondence is being deposited with the United States Postal Service as first class mail in an envelope addressed to: Commissioner of Patents and Trademarks, Washington, D.C. 20231, on

June 11, 1982.

BLANCHARD, FLYNN, THIEL, BOUTELL & TANIS, P.C.

Raywood H. Blanchard, Reg. No. 16 383
L. Martin Flynn, Reg. No. 17 835
Dale H. Thiel, Reg. No. 24 323
David G. Boutell, Reg. No. 25 072
Ronald J. Tanis, Reg. No. 22 724

By: David G. Boutell - Reg. No. 25 072

Date: June 11, 1982

DGB/9
Correspondence: Amendment Under Rule 312 dated June 8, 1982
Claim of Priority

JUN 14 1982 PAT & TRADE

Applicant : Kurt Stoll June 8, 1982

Serial No.: 153 999 Group 212

Filed : May 28, 1980 Examiner D. Duggan

For : MAGNETICALLY COUPLED ARRANGEMENT FOR A DRIVING AND A DRIVEN MEMBER
Batch K85

Honorable Commissioner of Patents and Trademarks

Washington, D. C. 20231

AMENDMENT UNDER RULE 312

Sir:

Pursuant to the provisions of Rule 312, Applicant respectfully requests entry of the following amendment:

Please change the title from "MAGNETICALLY COUPLED ARRANGEMENT FOR A DRIVING AND A DRIVEN AND A" to ---MAGNETICALLY COUPLED ARRANGEMENT FOR A DRIVING AND A DRIVEN MEMBER---.

REMARKS

A routine review of this application prior to payment of the Issue Fee has revealed that the official Notice of Allowance as well as the Base Issue Fee Transmittal form for this application has an incorrect title printed thereon. The title was amended in an amendment dated November 2, 1981 and filed on or about November 4, 1981.

Applicant requests that a corrected Notice of Allowance and Base Issue Fee Transmittal form be issued in this particular matter. If the correction has not yet been made and notification issued prior to the current due date for payment of the Issue Fee, Applicant will utilize the Base Issue Fee Transmittal form and modify thereon in red ink the title so that it is in accord with the above set forth amendment.

Respectfully submitted,

By David G. Boutell
Reg. No. 25 072

BLANCHARD, FLYNN, THIEL,
BOUTELL & TANIS, P.C.
2026 Rambling Road
Kalamazoo, Michigan 49008

DGB/9
Encl. Postal Card

Telephone: (616) 381-1156

MAIL DEPT. JUN 14 1982 TRADE MARK

RECEIVED JUN 16 1982 GROUP 210

Applicant : Kuft Stoll

Serial No.: 153 999

Filed : May 28, 1980

For : MAGNETICALLY COUPLED ARRANGEMENT FOR A DRIVING AND A DRIVEN MEMBER

Group No. 212

Examiner D. Duggan

Date/Mailing Notice of Allowance: 6/2/82

Batch: K85

Honorable Commissioner of Patents and Trademarks

Washington, D. C. 20231

CLAIM OF PRIORITY

Sir:

Applicant(s) hereby claim(s) the right of priority based on German patent application Serial No. P 28 22 444.0 , filed June 1, 1979 . A certified copy of the application is enclosed in support of the claim of priority.

Respectfully submitted,

David G. Boutell, Reg. No. 25 072
BLANCHARD, FLYNN, THIEL,
BOUTELL & TANIS, P.C.
2026 Rambling Road
Kalamazoo, Michigan 49008

DGB/5

Encl: Certified Copy of German Patent Application Serial No. P 28 22 444.0
Postal Card

JUN 14 1982

BUNDESREPUBLIK DEUTSCHLAND

Bescheinigung

Die Festo-Maschinenfabrik Gottlieb Stoll in 7300 Eßlingen hat eine Patentanmeldung unter der Bezeichnung

"Druckmittelbetätigter Linearmotor"

am 1. Juni 1979 beim Deutschen Patentamt eingereicht.

Die angehefteten Stücke sind eine richtige und genaue Wiedergabe der ursprünglichen Unterlagen dieser Patentanmeldung.

Die Anmeldung hat im Deutschen Patentamt vorläufig das Symbol B65G 51-04 der Internationalen Patentklassifikation erhalten.

München, den 8. Mai 1980
Der Präsident des Deutschen Patentamts
Im Auftrag

Schaal

Aktenzeichen:
P 29 22 444.0

28. Mai 1979
D 8007 - ossp

Festo-Maschinenfabrik Gottlieb Stoll
7300 Eßlingen / N

Druckmittelbetätigter Linearmotor

Ansprüche

1. Druckmittelbetätigter Linearmotor für eine Transportvorrichtung, mit einem an eine Druckmittelquelle anschließbaren Rohr, mit einem im Rohr strömungsmitteldicht laufenden und eine hohlzylindrische innere Mitnehmer-Magnetanordnung tragenden Kolben und mit einem auf dem Rohr laufenden und eine hohlzylindrische äußere Mitnehmer-Magnetanordnung tragenden Abtriebsteil, bei dem die beiden Magnetanordnungen unter radialem Spiel zur benachbarten Rohroberfläche angeordnet sind, dadurch gekennzeichnet, daß die zum Rohr (10)

weisenden Oberflächen der inneren Magnetanordnung (20) und der äußeren Magnetanordnung (32) nur um eine kleine Strecke in radialer Richtung von den benachbarten Rohroberflächen entfernt sind und daß das Abtriebsteil (18) über an seinen Enden vorgesehene Abstreifringe (44) auf dem Rohr (10) läuit, während die an den Kolbenenden angeordneten Dichtringe (26) Abstreifringe für die innere Rohroberfläche darstellen.

2. Linearmotor nach Anspruch 1, dadurch gekennzeichnet, daß die Abstreifringe (44) des Abtriebsteils (18) in nach innen offenen Ringnuten (42) von radialen Stirnwänden (38) des Abtriebsteiles einsitzen.

3. Linearmotor nach Anspruch 1 oder 2, dadurch gekennzeichnet, daß die Abstreifringe (44) des Abtriebsteils (18) und die Dichtringe (26) des Kolbens (16) in einer gemeinsamen, zur Achse des Rohres (10) transversalen Ebene liegen.

4. Linearmotor nach einem der Ansprüche 1 bis 3, dadurch gekennzeichnet, daß der Kolben (16) in der Nachbarschaft der Dichtringe (26) Gleitführungsringe (24) trägt.

5. Linearmotor nach einem der Ansprüche 1 bis 5, dadurch gekennzeichnet, daß das Rohr (10) aus einem dünnen rostfreien Material wie nichtmagnetise-hem Edelstahl, Messing oder Kunststoff besteht und als Druckmittel Wasser oder eine Mischung aus Wasser und Öl verwendet wird.

6. Linearmotor nach einem der Ansprüche 1 bis 6, dadurch gekennzeichnet, daß das Rohr (10) aus einer Mehrzahl stumpf aneinander geschweißter Rohrsegmente (12a, 12b) besteht.

7. Linearmotor nach einem der Ansprüche 1 bis 7, dadurch gekennzeichnet, daß die Abstreifringe (44) und die Dichtringe (26) aus elastisch nachgiebigem Material bestehen.

8. Linearmotor nach einem der Ansprüche 1 bis 7, dadurch gekennzeichnet, daß das Abtriebsteil (18) eine die äußere hohlzylindrische Magnetanordnung (32) umgebende Hülse (30) aus magnetisierbarem Material aufweist.

9. Linearmotor nach einem der Ansprüche 1 bis 8, dadurch gekennzeichnet, daß der Kolben (16) einen aus nicht magnetisierbarem Material bestehenden Kolbenkörper aufweist.

10. Linearmotor nach einem der Ansprüche 1 bis 9, dadurch gekennzeichnet, daß die Magnetanordnungen (20, 32) jeweils durch axial aufeinanderfolgende, radial polarisierte Ringmagnete gebildet sind, welche durch dazwischenliegende, nicht magnetisierbare Distanzscheiben (22, 34) getrennt sind.

11. Linearmotor nach einem der Ansprüche 1 bis 10, dadurch gekennzeichnet, daß der Kolben an seinen Enden elastisch nachgiebige Puffer (28) trägt, deren Umfangsfläche ebenfalls unter radialem Abstand zur inneren Oberfläche des Rohres (10) verläuft.

12. Linearmotor nach Anspruch 11, dadurch gekennzeichnet, daß er eine Mehrzahl mit ihren Puffern (28) aneinander anstoßender Kolben (16) und eine entsprechende Mehrzahl, jeweils einem der Kolben zugeordneter Abtriebsteile (18) aufweist.

28. Mai 1979

D 8007 - ossp

Festo-Maschinenfabrik Gottlieb Stoll
7300 Eßlingen / N

Druckmittelbetätiger Linearmotor

Die Erfindung betrifft einen druckmittelbetätigten Linearmotor für eine Transportvorrichtung gemäß dem Oberbegriff des Anspruchs 1.

Derartige Linearmotoren werden insbesondere für Transportvorrichtungen verwendet, und ihr Abtriebsteil ist dann mit einem Transportwagen für die zu fördernden Güter verbunden. Auf diese Weise können auch große Abmessungen aufweisende Güter rohrpostähnlich gefördert werden. Eine entsprechende Transportvorrichtung ist in der DE-OS 27 37 924 beschrieben.

Bei dem bekannten Linearmotor ist zur Sicherstellung eines störungsfreien Betriebes ein größeres radiales Spiel zwischen den einander gegenüberliegenden Oberflächen der Magnetanordnungen und des Rohres notwendig. Bisher war man der Auffassung, daß man nur auf diese Weise die stets vorhandenen Oberflächenrauhigkeiten und Querschnittsungenauigkeiten des Rohres aufnehmen kann. Andererseits wäre es natürlich im Hinblick auf die magnetische Mitnehmkraft zwischen Kolben und Abtriebsteil vorteilhaft, wenn man die Größe des Gesamtluftspaltes zwischen den beiden Magnetanordnungen klein halten könnte. Man könnte dann zur Erzielung einer gewünschten Mitnehmkraft zwischen Kolben und Abtriebsteil des Linearmotors kleinere und damit weniger schwere und insbesondere erheblich billigere Magnetanordnungen verwenden als bisher.

Durch die vorliegende Erfindung soll daher ein druckmittelbetätigter Linearmotor gemäß dem Oberbegriff des Anspruchs 1 so weiter gebildet werden, daß eine große Mitnehmkraft zwischen Kolben und Abtriebsteil erzielt wird und trotzdem kein Hängenbleiben von Kolben und Abtriebsteil am Rohr zu befürchten ist.

Diese Aufgabe ist erfindungsgemäß gelöst durch einen Linearmotor gemäß Anspruch 1.

Es wurde erkannt, daß die heutzutage zur Verfügung stehenden nicht magnetischen Rohrmaterialien eine so gute Oberflächenqualität aufweisen, daß an und für sich der Luftspalt

zwischen den Magnetanordnungen und den Rohroberflächen gegenüber dem Stand der Technik erheblich vermindert werden könnte, obwohl sich hieraus in der Praxis bisher immer nicht hinnehmbare Betriebsstörungen ergeben haben. Es wurde nun aber erkannt, daß diese Betriebsstörung nicht auf Oberflächenrauhigkeiten und Querschnittsungenauigkeiten des Rohrmateriales zurückzuführen sind (sogar Stumpfverschweißungen von Rohrabschnitten können heute mit sehr guter Oberflächengüte durchgeführt werden), sondern darauf, daß sich auf den Rohroberflächen stets Schmutz und Verunreinigungen befinden, welche bei klein gewählten Spalten zwischen den Magnetanordnungen und den Rohroberflächen nicht mehr durch diese hindurchlaufen können sondern in diesen verkeilt werden. Dies ist bei dem erfindungsgemäßen Linearmotor nicht mehr möglich, da die Abstreifringe des Abtriebsteiles bzw. die Dichtringe des Kolbens den unter die Magnetanordnungen einlaufenden Teil der Rohroberflächen sauber halten.

Vorteilhafte Weiterbildungen der Erfindung sind in Unteransprüchen angegeben.

Mit der Weiterbildung der Erfindung gemäß Anspruch 3 wird erreicht, daß durch den Anpreßdruck der inneren und äußeren Abstreifringe kein Verformen des Drehmoments auf das Rohr ausgeübt wird, welches vorzugsweise geringe Wandstärke haben soll, damit der Gesamtluftspalt zwischen den Magnetanordnungen klein gehalten werden kann.

Die Weiterbildung der Erfindung gemäß Anspruch 4 ist deshalb vorteilhaft, weil der Dichtring des Kolbens dann verhältnismäßig weich gewählt werden kann und zum großen Teil von Führungsaufgaben befreit werden kann. Hierdurch können die Reibungsverluste im Motor klein gehalten werden.

Bei einem Linearmotor gemäß Anspruch 5 erhält man eine sofort mit der Druckbeaufschlagung einsetzende und sofort mit der Beendigung der Druckbeaufschlagung zum Stillstand kommende Bewegung von Kolben und Abtriebsteil, was ein sehr genaues Positionieren des Abtriebsteils durch Schalten der Druckmittelversorgung ermöglicht. Außerdem braucht das Druckmittel keinen großen Druck aufzuweisen, da das Bewegen des Kolbens eher durch Mitnahme in einem Flüssigkeitsstrom als durch Differenzdruckbeaufschlagung erfolgt.

Gemäß Anspruch 6 läßt sich ein Linearmotor großer Länge realisieren.

Die Weiterbildung der Erfindung nach Anspruch 8 ist im Hinblick auf das Kleinhalten magnetischer Streufelder in der Umgebung des Abtriebsteiles von Vorteil. Auf diese Weise können unerwünschte Bremskräfte verhindert werden, welche sonst beim Vorbeilaufen von Kolben und Abtriebsteil an magnetisierbaren Maschinenteilen entstehen.

Bei einem Kolben gemäß Anspruch 9 kann das Gewicht besonders klein gehalten werden. Außerdem wird durch die Wahl nicht magnetisierbaren Materiales für den Kolbenkörper im durch das Abtriebsteil begrenzten Innenraum ein stärker inhomogenes Magnetfeld erhalten, was im Hinblick auf eine hohe Mitnahmekraft vorteilhaft ist.

Auch der segmentierte Aufbau der Magnetanordnungen, wie er im Anspruch 10 angegeben ist, trägt dazu bei, daß das Magnetfeld in axialer Richtung inhomogen ist, was wiederum das Mitnehmen des Abtriebsteiles durch den Kolben begünstigt.

Bildet man den Kolben gemäß Anspruch 11 aus, so kann er sehr präzise durch Anlaufen an einem starren Hindernis zum Halten gebracht werden. Ein weiterer Vorteil ist der, daß man auf diese Weise gemäß Anspruch 12 einen insgesamt große axiale Abmessung aufweisenden Kolben herstellen kann, der durch gekrümmte Rdrabschnitte bewegt werden kann, obwohl der radiale Abstand zwischen der inneren Magnetanordnung und der Rohrinnenwand nur klein ist. Man hat also einen langen Linearmotor mit gelenkig verbundenen Kolbenteilen und diesen zugeordneten, magnetisch gekoppelten, gegeneinander verschwenkbaren Abtriebsteilen. Ein derartiger Linearmotor kann somit eine große Traglast auf eine große Länge des Rohres verteilen, hat eine gute Mitnehmkraft zwischen Kolben und Abtriebsteil und kann trotzdem durch gekrümmte Rohrabschnitte bewegt werden.

Nachstehend wird die Erfindung anhand eines Ausführungsbeispieles unter Bezugnahme auf die beiliegende Zeichnung näher erläutert. In dieser zeigt die einzige Figur eine perspektivische Ansicht eines Linearmotors mit kleinem Luftspalt zwischen den Magnetanordnungen, wobei ein Abschnitt des Abtriebsteiles und des Rohres weggebrochen ist, um Einzelheiten des Kolbens zeigen zu können.

Die Zeichnung zeigt einen druckmittelbetätigten Linearmotor mit einem verhältnismäßig dünnen und verhältnismäßig kleinen Durchmesser aufweisenden Rohr 10 aus rostfreiem und nicht magnetischem Material, z. B. nicht magnetischem Edelstahl, Messing oder einem gegebenenfalls faserverstärktem Kunststoff. Dieses Rohr besteht aus stumpf zusammengeschweißten oder zusammengeklebten Rohrsegmenten 12a, 12b mit dazwischenliegenden Schweißnähten 14, welche sowohl auf der Rohrinnenseite als auch auf der Rohraußenseite keine Oberflächennnstetigkeiten bilden. Im Rohr 10, das wahlweise von seinen beiden Enden her mit einer Druckmittelquelle bzw. einer Druckmittelsenke verbindbar ist, ist ein insgesamt mit 16 bezeichneter Kolben angeordnet. Auf dem Rohr 10 läuft ein insgesamt mit 18 bezeichnetes Abtriebsteil des Linearmotors. Am letzteren ist eine nicht gezeigte Trageinrichtung für zu transportierende Güter befestigbar.

Der Kolben 16 hat einen aus Aluminium oder einem anderen nicht magnetischen Material mit geringem Gewicht gefertigten

Kolbenkörper. Dieser trägt axial aufeinanderfolgend Permanent-Ringmagnete 20, welche radial polarisiert sind und zwischen denen Distanzscheiben 22 angeordnet sind. Zu beiden Seiten der insgesamt hohlzylindrischen Anordnung von Ringmagneten 20 trägt der Kolbenkörper teilweise in Nuten des letzteren einsitzende und über die Kolbenkörperoberfläche überstehende und im Gleitsitz auf der Rohrinnenwand laufende Gleitführungsringe 24. Axial außerhalb der Gleitführungsringe 24 ist jeweils ein elastomerer Dichtring 26 vorgesehen, der ebenfalls in einer Nut des Kolbenkörpers einsitzt. Die beiden Stirnflächen des Kolbens tragen jeweils einen Puffer 28, über den der Kolben 16 an einem nicht wiedergegebenen feststehenden Anschlag abgebremst werden kann. Die Puffer 28 dienen ferner zur gelenkigen mechanischen Kopplung mehrere Kolben 16, wie weiter genauer beschrieben wird.

Die äußeren Mantelflächen der Ringmagnete 20 haben geringen Abstand zur Innenwand des Rohres 10. Da aber die Anordnung der Ringmagnete 20 zu beiden Seiten durch die Gleitführungsringe 24 und die Dichtringe 26 abgeschlossen ist, ist es nicht möglich, daß von der Herstellung des Rohres 10 in diesem verbliebene Verunreinigungen oder vom Druckmittel (vorzugsweise Öl oder eine Mischung aus 95 % Wasser und 5 % Öl) mitgeschleppte Verunreinigungen in den kleinen Spalt zwischen der Außenseite der Ringmagnetanordnung des Kolbens und die Innenseite des Rohres gelangt. Diese könnten zu einem Verklemmen des Kolbens 16 im Rohr 10 führen.

Vielmehr werden derartige Verunreinigungen von den Dichtringen 26 - und falls sie doch einmal an diesen vorbeikommen sollten noch von den Gleitführungsringen 24 - vor dem Kolben 16 hergeschoben, so daß der Ringmagnet-anordnung stets ein sauberer Abschnitt der Rohrinnenwand gegenüberliegt.

Das Abtriebsteil 18 des Linearmotors ist im wesentlich spiegelbildlich zum Kolben 16 aufgebaut, wobei die Spiegelfläche eine mitten zwischen den Rohroberflächen liegende Zylinderfläche ist. Dem Kolbenkörper entspricht so ein Hülsenteil 30, welches aber im Hinblick auf die Verminderung des magnetischen Streufeldes aus magnetisierbarem Material hergestellt ist. Das Hülsenteil 30 umgibt axial aufeinanderfolgende Permanent-Ringmagnete 32, die wiederum in radialer Richtung, und zwar in gleicher Richtung wie die Ringmagnete 12, polarisiert sind und durch dazwischenliegende Distanzscheiben 34 getrennt sind. Über elastomere Druckringe 36 sind die Ringmagnete 32 zwischen zwei ebenfalls aus magnetisierbarem Material gefertigte und mit dem Hülsenteil 30 verschraubte Stirnwände 38 eingespannt.

Die Stirnwände 38 haben eine das Rohr 10 unter geringem Spiel umgreifende mittige Öffnung 40, und in deren mit einem Material mit niederer Reibung, z. B. Tetrafluoräthylen beschichteter innerer Umfangswand ist eine nach innen offene Nut 42 vorgesehen, in welcher ein Abstreifring 44 läuft. Die Abstreifringe 44 sorgen beim Abtriebsteil 18, bei dem die innere Mantelfläche der hohlzylindrischen Magnetanordnung der

Ringmagnete 32 nur geringen Abstand von der Oberfläche des Rohres 10 aufweist, dafür, daß keine Fremdkörper in den kleinen Spalt zwischen den Ringmagneten 32 und der Rohroberfläche eintreten können. Derartige Fremdkörper, welche auf der der Umgebungsatmosphäre ausgesetzten Rohroberfläche stets angetroffen werden, werden also von den Abstreifringen 44 weggeschoben, bevor sie die Ringmagnete 32 erreichen.

Dadurch, daß man den gesamten "Luft-"Spalt zwischen der durch die Ringmagnete 20 gebildeten inneren Magnetanordnung und der durch die Ringmagnete 32 gebildeten äußeren Magnetanordnung (diese besteht aus dem Abstand der Ringmagnete 20 von der Rohrinnenwand, der Wandstärke des Rohres 10 und dem Abstand der Ringmagnete 32 von der Rohraußenwand) nun sehr klein wählen kann (kleine Fremdkörper brauchen nicht mehr zwischen den Magnetanordnungen und den Rohroberflächen hindurchtreten zu können), erhält man eine sehr gute magnetische Kopplung zwischen den beiden Ringmagnetanordnungen und damit eine gute Übertragung der vom Druckmittel bereitgestellten Kraft auf das Abtriebsteil.

Wie aus der Zeichnung ersichtlich ist, fluchten die Abstreifringe 44 und die Dichtringe 26 in radialer Richtung, so daß durch die Anpreßkraft auf das Rohr insgesamt kein Drehmoment ausgeübt wird. Durch diese Anordnung ist auch ein leichtes Bewegen von Kolben und Abtriebsteil über gebogene Rohrabschnitte hinweg möglich.

Der oben beschriebene Linearmotor kann leicht für das Befördern schwerer Lasten modifiziert werden. Man braucht hierzu nur in einem Rohrabschnitt mit Hilfsentlüftung zwei Kolben 16 hintereinander so anzuordnen, daß sie mit ihren Puffern 28 aneinander anstoßen, und für jeden Kolben ein Abtriebsteil auf das Rohr aufzuschieben, welches dann durch Magnetkräfte automatisch auf den zugehörigen Kolben ausgerichtet wird. Die Trageinrichtung für die Güter wird dann gelenkig mit jedem der Abtriebsteile verbunden. Die beiden Kolben bilden so effektiv einen Kolben doppelter (dreifacher usw.) Länge mit gelenkig "verbundenen"(durch Druck in Anlage aneinander gehaltenen) Einzelkolben, und die beiden (drei usw.) Abtriebsteile werden genau synchron bewegt. Auf diese Weise kann man das Gewicht der zu fördernden Last auf eine große Strecke des Rohres verteilen und erhält trotzdem keine Passungsprobleme, wie sie bei der Verwendung entsprechend langer Kolben und Abtriebsteile bei den erfindungsgemäß verwendeten kleinen Luftspalten zwischen den Magnetanordnungen und den Rohroberflächen erhalten würden. Auch gebogene Rohrabschnitte können durchfahren werden, was wiederum bei Verwendung entsprechend langer einstückiger Kolben und Abtriebsteile nicht möglich wäre.

Man erkennt, daß diese durch effektive Verlängerung des treibenden Teiles und des die Last tragenden Teiles Linearmotors ohne irgendwelche Veränderung an den Standardteilen (Kolben 16, Abtriebsteil 18) möglich ist, also auch am Einsatzort und nach der Erstinstallation noch ohne weiteres

möglich ist. Die Verteilung der Last auf eine größere Länge des Rohres 10 ist von besonderer Bedeutung bei der Verwendung von dünnen Rohren, welche im Hinblick auf die magnetische Kopplung zwischen Kolben und Abtriebsteil besonders vorteilhaft sind. Auch dünne Kunststoffrohre, welche im Hinblick auf die Oberflächenbeschaffenheit an sich sehr vorteilhaft sind, haben in der Regel keine sehr große Tragkraft, und für sie eignen sich somit derartige, gelenkig verbundene Kolben und Abtriebsteile aufweisende Anordnungen besonders gut.

Zum Anhalten des Abtriebsteiles bei einer gewünschten Stelle, wird dort ein auf die Druckmittelversorgung zum Rohr 10 arbeitender Stellungsgeber installiert, welcher entweder ein mechanisch oder optisch auf das Ankommen des Abtriebsteiles ansprechender Geber oder ein induktiver Geber oder ein auf magnetische Streufelder ansprechender Geber, z. B. ein Reed-Schalter sein kann.

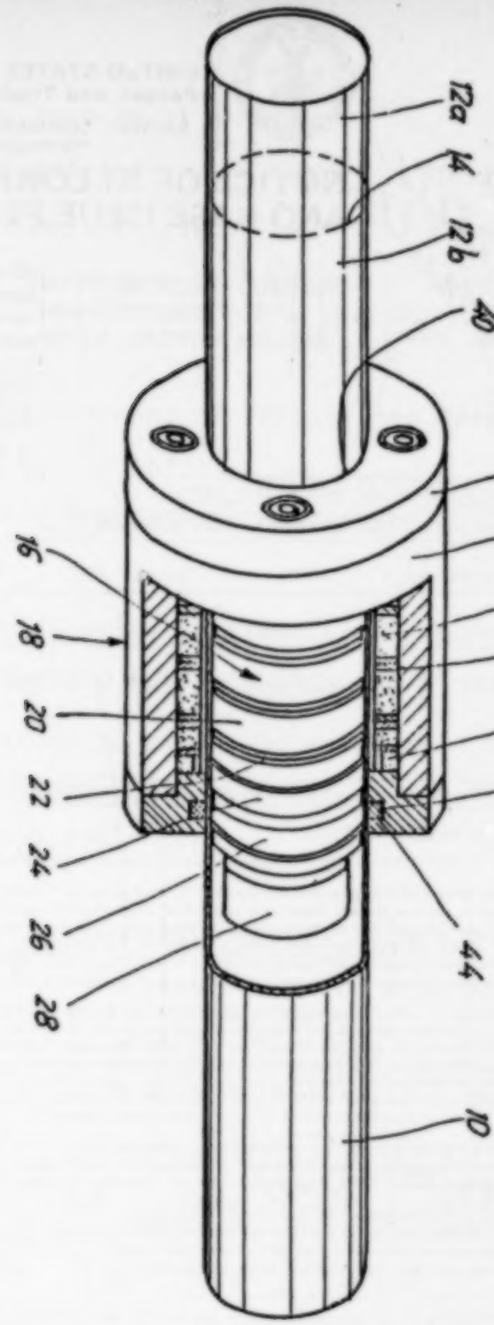

UNITED STATES DEPARTMENT OF COMMERCE
Patent and Trademark Office

Address: COMMISSIONER OF PATENTS AND TRADEMARKS
Washington, D.C. 20231

Duplicate notice mailed 7/28/82

NOTICE OF ALLOWANCE AND BASE ISSUE FEE DUE

BLANCHARD, FLYNN, THIEL
BOUTELL & TANIS
2020 RANDING RD.
KALAMAZOO, MI 49008

All communications regarding this application should give the serial number, date of filing, name of applicant, and batch number.

Please direct all communications to the Attention of "OFFICE OF PUBLICATIONS" unless advised to the contrary.

The application identified below has been examined and found allowable for issuance of Letters Patent. PROSECUTION ON THE MERITS IS CLOSED.

	SC/SERIAL NO.	FILING DATE	TOTAL CLAIMS	DATE MAILED	EXAMINER AND GROUP ART UNIT
	06/153,999	05/28/80	007	06/02/82	DUGGAN, D 212

First Named Applicant: STOLL, KURT

TITLE OF INVENTION (This may have been amended by Exam): MAGNETICALLY COUPLED ARRANGEMENT FOR A DRIVING AND A DRIVEN AND A

BASE FEE COMPUTATION			BASE FEE DUE	ATTY'S DOCKET NO.	CLASS - SUBCLASS	BATCH NO
$100 +	2	(for dwg. @ $2 per sheet) + $10 =	112	MRR CASE 28	310-103.000	KB5

The complete Issue Fee is one hundred dollars ($100) plus two dollars ($2) for each sheet of drawing, plus ten dollars ($10) for each printed page of specification (including claims) or portion thereof. Inasmuch as the final number of printed pages cannot be determined in advance of printing, an initial BASE ISSUE FEE (consisting of the fee for printing the first page of specification ($10) plus the fee of ($2) for each sheet of drawing, added to the fee of $100) MUST BE PAID WITHIN THREE MONTHS FROM THE DATE OF THIS NOTICE, or the application shall be regarded as ABANDONED. The Base Issue Fee will not be accepted from anyone other than the applicant; a registered attorney or agent; or the assignee or other party in interest as shown by the records of the Patent and Trademark Office.

In order to minimize delays in the issuance of a patent based on this application, this Notice may have been mailed prior to completion of final processing by the Examining Group. It is recognized that the nature and/or extent of the remaining revision or processing requirements may cause slight delays in the printing of the patent. In addition, if prosecution is to be reopened, this Notice of Allowance will be vacated and the appropriate Office action will follow in due course. If the base issue fee has already been paid and prosecution is reopened, the applicant may request a refund or request that the fee be credited to a Deposit Account. However, applicant may wait until the application is either found allowable or held abandoned. If allowed, upon receipt of a new Notice of Allowance, applicant may request that the previously submitted base issue fee be applied. If abandoned, applicant may request refund or credit to a Deposit Account.

In the case of each patent issuing without an assignment, the complete post office address of the inventor(s) will be printed in the patent heading and in the Official Gazette. If the inventor's address is now different from the address which appears in the application, please fill in the information in the spaces provided on PTOL-85c enclosed. If there are address changes for more than two inventors, enter the additional addresses on the reverse side of the PTOL-85c.

The appropriate spaces in the ASSIGNMENT DATA section of PTOL-85b must be completed in all cases. If it is desired to have the patent issue to an assignee, an assignment must have been previously submitted to the Patent and Trademark Office or must be submitted herewith as required by 37 C.F.R. 1.334. Where there is an assignment, the assignee's name and address must be provided on the PTOL-85b to insure its inclusion in the printed patent.

Advance orders for 10 or more printed copies of the prospective patent can be made by completing the information in Section 4 of PTOL-85b and submitting payment therewith. If use of a Deposit Account is being authorized for payment, PTOL-85c should also be forwarded. The order must be for at least 10 copies and must accompany the issue fee. The copies ordered will be sent only to the address specified in section 1 or 1A of PTOL-85b.

If an additional fee is due, a Notice of Balance of Issue Fee Due will be mailed together with the patentee's copy of the patent. Payment must be made within three months from the date shown on said Notice since FAILURE TO PAY THIS BALANCE WITHIN THE SPECIFIED PERIOD WILL RESULT IN LAPSE OF THE PATENT.

☐ Note attached communication from Examiner.

☐ This notice is issued in view of applicant's communication filed _____

IMPORTANT

ATTENTION IS DIRECTED TO 37 C.F.R. 1.334

THE PATENT WILL ISSUE TO APPLICANT UNLESS AN ASSIGNEE IS SHOWN IN ITEM 3 ON FORM PTOL-85b, ATTACHED

PATENT AND TRADEMARK OFFICE COPY

PATENT & TRADEMARK OFFICE

Applicant : Kurt Stoll

Serial No.: 153 999 — Group 212

Filed : May 28, 1980 — Examiner D. Duggan

For : MAGNETICALLY COUPLED ARRANGEMENT FOR A DRIVING AND A DRIVEN MEMBER — Date of Mailing of Notice of Allowance: 6/2/82 Batch K85

Honorable Commissioner of Patents and Trademarks

Washington, D. C. 20231

CERTIFICATE OF MAILING

Sir:

I hereby certify that this correspondence is being deposited with the United States Postal Service as first class mail in an envelope addressed to: Commissioner of Patents and Trademarks, Washington, D.C. 20231, on July 21, 1982.

BLANCHARD, FLYNN, THIEL, BOUTELL & TANIS, P.C.

Raywood H. Blanchard, Reg. No. 16 383
L. Martin Flynn, Reg. No. 17 835
Dale H. Thiel, Reg. No. 24 323
David G. Boutell, Reg. No. 25 072
Ronald J. Tanis, Reg. No. 22 724

By: David G. Boutell, Reg. No. 25 072

Date: July 21, 1982

Correspondence: Transmittal of base issue fee:
Form PTOL 85b
Form PTOL 85c
Postal Card

V

BASE ISSUE FEE TRANSMITTAL

U.S. Department of Commerce
Patent and Trademark Office

...is formal transmittal and should be used for transmitting the Base Issue Fee. The sections 1A through 4 below must be complete...

MAILING INSTRUCTIONS

...other correspondence including the Issue Fee Receipt, the Patent, the Notice of Balance of Issue Fee Due if appropriate, and advanced orders will b... to the addressee entered in section 1 at the left below, unless you direct otherwise by specifying the appropriate name and address in 1A below.

BLANCHARD, FLYNN, THIEL,
BOUTELL & TANIS
2024 RAMBLING RD.
KALAMAZOO, MI 49008

2A. The COMMISSIONER OF PATENTS AND TRADEMARKS is requested to apply the Base Issue Fee to the application identified below.

(Signature of party in interest of record) — (Date)
David G. Boutell — 7/21/82
Reg. No. 25 072

Note: The Base Issue Fee will not be accepted from anyone other than the applicant; a registered attorney or agent; or the assignee or other party in interest as shown by the records of the Patent and Trademark Office.

SC/SERIAL NO.	FILING DATE	TOTAL CLAIMS	DATE MAILED	EXAMINER AND GROUP ART UNIT
06/153,999	05/28/80	007	06/02/82	DUGGAN, D 212

First Named Applicant: STILL, KURT

TITLE OF INVENTION (this may have been changed by Exam): MAGNETICALLY COUPLED ARRANGEMENT FOR A DRIVING AND A DRIVEN MEMBER

BASE FEE COMPUTATION	BASE FEE DUE	ATTY'S DOCKET NO.	CLASS - SUBCLASS	BATCH NO.
$100 + 2 (for dwg. @ $2 per sheet) + $10 =	112	MAR CASE 28	310-103.000	KMS

1A. Further correspondence to be mailed to the following:

2B. For printing on the patent front page, list below the names of not more than 3 registered patent attorneys or agents OR, alternatively, the name of a firm having as a member a registered attorney or agent. If no name is listed below, no name will be printed.

1 BLANCHARD, FLYNN, THIEL, BOUTELL & TANIS, P.C.
2
3

DO NOT USE THIS SPACE

P5362 07/26/82 153999 02-2675 2 106 100.00CH
P5363 07/26/82 153999 02-2675 2 107 10.00CH
P5366 07/26/82 153999 02-2675 2 108 2.00CH

ASSIGNMENT DATA (print or type)

(1) [XX] This application is NOT assigned.
(2) [ ] Assignment previously submitted to the Patent and Trademark Office.
(3) [ ] Assignment submitted herewith.

For Printing On The Patent: (Unless an assignee is identified below, no assignee data will appear on the patent. Inclusion of assignee data below is only appropriate when an assignment has been previously submitted to the PTO or is submitted herewith. Completion of this form is NOT a substitute for filing of an assignment as required by 37 C.F.R. 1.334).

(1) NAME OF ASSIGNEE:

(2) ADDRESS: (City & State or Country)

(3) STATE OF INCORPORATION, IF ASSIGNEE IS A CORPORATION:

4. The following fees are enclosed:
[ ] Base fee [ ] Advanced order [ ] Assignment recording

The following fees should be charged to deposit acc. no. 02-2675
(PTOL-85c must be enclosed)

[X] Base fee
[ ] Advanced order
[ ] Assignment recording
[X] Balance of Issue fee due, if any

Number of advanced order copies requested. _____
(must be for 10 or more copies)

TRANSMIT THIS FORM WITH FEE

T. Hammond

Jan. 1, 1929. L. H. ROLLER 1,697,142

MATERIAL FOR MAGNETIC APPARATUS AND PROCESS OF MAKING SAME

Filed Nov. 21, 1925

Fig. 1.

Fig. 2.

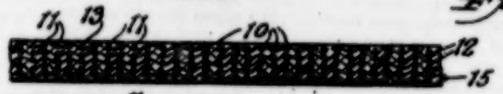

Fig. 3.

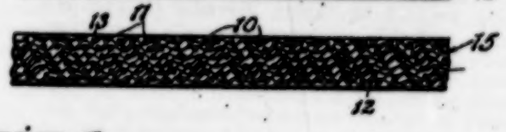

Fig. 4.

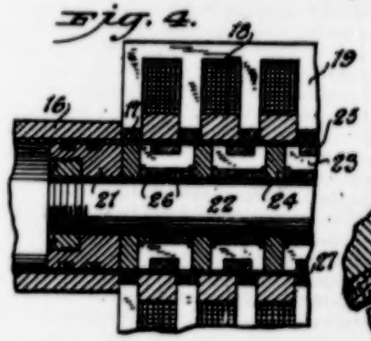

Fig. 6.

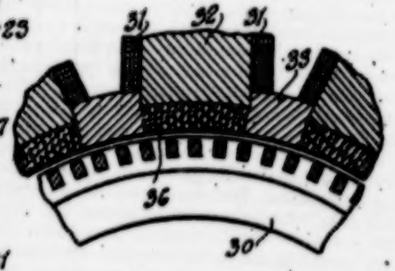

Fig. 5.

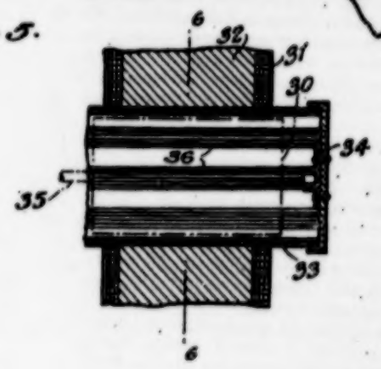

Fig. 7.

INVENTOR
L. H. Roller
BY
ATTORNEY

Patented Jan. 1, 1929.

1,697,142

UNITED STATES PATENT OFFICE.

LOUIS H. ROLLER, OF WHITE PLAINS, NEW YORK.

MATERIAL FOR MAGNETIC APPARATUS AND PROCESS OF MAKING SAME.

Application filed November 21, 1925. Serial No. 70,687.

My invention relates to an improved material adapted particularly for use in magnetic and electro-magnetic apparatus and to a process for making such material and it relates more particularly to a material which is mechanically strong, water proof, gas proof and in the main, a non-conductor of electricity and offering a high reluctance to the passage of magnetic lines of force, but having therein clearly defined paths of low magnetic reluctivity.

It is a well known practice to pass magnetic lines of force through the walls of a sealed container to perform work within the container instead of transmitting power by means of moving mechanical elements passing through the wall with the consequent danger of leakage around such elements. However, in order to avoid serious losses due to eddy currents, such walls must be made of electrically non-conducting material. On the other hand this has heretofore limited one to the use of materials that have a high magnetic reluctance; so that the walls have had to be very thin to avoid serious losses due to leakage of magnetic flux.

It is an object of the present invention to provide a material which overcomes these objections by providing a material which is not subject to appreciable eddy current losses, in which a low magnetic reluctance is provided where desired, and which, therefore, will provide a wall of considerable thickness without entailing material losses due to magnetic leakage.

A specific use of my improved material will be found in my co-pending application, Serial No. 710,680, filed May 2, 1924, which described an electro-magnetic pump in which magnetic lines of force were passed through a sealed cylinder into an armature to reciprocate the latter and in which the cylinder was made of non-metallic material containing zones of low reluctance formed by embedding soft iron particles in the material.

It will be obvious that there would be many other uses to which the material could be applied, in certain of which it would be desirable not to form the material in cylinders but to form it in other shapes. Furthermore, if formed in cylinders certain uses would require that the regions of low reluctance be arranged transversely to the axis of the cylinder while in other cases the regions of low reluctance should be arranged parallel to the axis of the cylinder.

In producing the material I employ a woven fabric of cloth in which fine threads of soft iron or other metal of high magnetic permeability are interwoven, the wire forming stripes in the cloth. The cloth is then impregnated with certain well known phenol condensation products and built up to any desired thickness by coiling it or piling it in layers with the stripes superposed. Thereafter the coil or pile is subjected to a heat and pressure to form a bakelite or condensite mass in which the wires are embedded.

I am aware that it is not new to embed metallic wires in bakelite or condensite, a patent on such material having been granted to John M. Taylor, December 12, 1922, No. 1,438,875. However, the material described in said patent was designed with an entirely different purpose in view, viz, that of strength so that the material could be used for gears and similar mechanical elements. Such material would be entirely unsuitable for my purpose, because the metallic strands are uniformly distributed throughout the material and must necessarily be so distributed for the purpose of giving uniform strength. But it will be evident that while such material would reduce the magnetic reluctivity such magnetic qualities would be uniformly distributed through the material and would defeat the purpose for which I intend to use my material. For the purpose I have in view it is essential that defined regions of low magnetic reluctance should be provided and that these regions be separated by regions of high reluctance otherwise there would be little advantage in using the material disclosed by Taylor cited, over that of using a continuous sheet or tube of iron. It is therefore, an object of my invention to provide a material in which the regions of low reluctance are separated by regions of high reluctance with no physical joint between such regions.

I also believe that I am the first to produce a fabric with separate stripes of iron wire woven therein. Heretofore, metallic wires have been interwoven with threads of textile material but the material contained wires running lengthwise as well as transversely to the material and was not confined to material in which the wires formed stripes running in one direction only.

A further object of my invention, therefore, is to provide a closely woven fabric having stripes of wire running in one direction only and to provide an efficient process for making such a fabric.

These and other objects I attain as hereinafter set forth, reference being had to the accompanying drawings in which

Figure 1 is a diagrammatic perspective view of a piece of fabric provided with threads of soft metal interwoven with non-metallic threads;

Fig. 2 is an edge view of a sheet of my improved material showing the iron wires arranged in layers vertically alined;

Fig. 3 is a view similar to Fig. 2 representing a modified form of my material in which the layers of iron wires are arranged in staggered relation to form inclined paths of low reluctance through the material;

Fig. 4 illustrates one application of my material showing in longitudinal cross section a fragmentary view of a magnetically operated pump having a cylinder of my improved material, the pump being similar in form to that disclosed in the aforesaid co-pending application;

Fig. 5 represents another application of my material illustrating a rotary motor of induction type in which the armature of the motor is enclosed in a casing formed of my improved material, the view representing a longitudinal section through a fragment of the casing with the armature of the motor indicated by broken lines;

Fig. 6 is a cross sectional view taken on the line 6—6 of Fig. 5: and

Fig. 7 is a diagrammatic plan view of another modification of my material illustrating how a plurality of spots of high magnetic permeability may be formed with angularly disposed layers of fabric.

Referring to Fig. 1, it will be observed that the fabric of which my material is composed has a warp of textile threads 10 displaced at intervals by metallic threads 11, while the weft threads 12 are all of textile material. As the object of this fabric is not to attain physical strength but magnetic permeability in defined regions the wires are preferably as fine as the textile threads. In practice it has been found inadvisable to use a large number of wire strands in the warp without interposing occasionally one or more textile threads between the wires. Because of the smoothness and hardness of the metallic strands the matting action which is desirable in weaving is absent, and there is a tendency for the filling threads to slide out between the warp threads while shedding. In other words, after the weft threads have been beaten into the shed by the reed, there is a tendency for the filling to slide out during the shedding operation, that is, during the raising and lowering of alternate warp strands. This is prevented, however, by introducing a thread of textile material between the wire warp threads. In practice it is found that desirable matting can be obtained if one or more threads of textile material be introduced between every four or five metallic threads. I therefore, form the warp with stripes of metallic wires interspersed with textile threads as shown at 13 in Fig. 1. It will be understood of course, that the stripe of iron wire need not be confined to the number shown in the drawing but may extend over any desired width of the fabric provided warp threads of textile material are introduced at sufficiently frequent intervals to produce the desired matting of the fabric. Having produced the fabric shown in Fig. 1 the next step of my process is to impregnate the fabric with a phenolic condensation product, after which layers of fabric are arranged in a pile as shown in Fig. 2 with the stripes of metallic wire in superposed alined relation. The fabric may be arranged in a flat pile or may be wound in a coil to form a solid rod or it may be wound around a form, if it be desired, to produce a cylindrical, rectangular or other form. The pile of fabric is then subjected to pressure and heat and the condensation product fills the spaces between the textile threads and between the wires inseparably binding all parts together in a uniform hard substance in which wire is thoroughly embedded. The material is very strong and shows no tendency to cleavage between regions of high reluctance and low reluctance. The material is also water proof and gas proof and a good electrical insulator except where the wire provides a path for electric current and, because the wire strands are separated by the textile threads and the impregnating condensite product, a high resistance to electric current is offered, which tends in use to prevent the formation of eddy currents. At the same time the magnetic reluctance of the material is markedly lowered in the zones or regions traversed by the wires.

As explained above one of the principal uses for which this material is adapted is to be found in the art of refrigeration in which it is desirable to have a closed system sealed against gas leakage and in which mechanical work may be performed by means of energy transmitted from without the system, avoiding any moving member passing into the system. Such an application was described in the aforesaid co-pending application and is illustrated in Fig. 4. It comprises a pump employing a cylinder 16 formed of my improved material, having therein zones 17 of low magnetic reluctance running circumferentially about the cylinder. The cylinder is surrounded by field coils 18 located in comb-shaped yokes 19, the teeth of which engage the zones 17. Within the cylinder 16 is a pump plunger 21 carried by a

rod 22 on which are mounted a plurality of armature sections 23 separated by collars 24, each armature section consisting of soft iron segments held in place by retaining rings 25 and tightly secured by means of wedges 26. Although condensite and bakelite are generally considered to be insoluble, I have found that they are not insoluble in anhydrous ammonia and hence, it is desirable to line the cylinder with some material, such for instance, as tin, which is not affected by ammonia when my pump is to be used for pumping ammonia gas. Such a liner is indicated at 27 and as it is not required to have any great strength, because the cylinder itself is strong enough to resist any pressures developed by the pump, it may be made merely thick enough to prevent actual contact of any liquid ammonia with the bakelite or condensite surface. The liner may be applied to the cylinder electrolytically or in any other suitable manner and as its purpose is merely to provide a coating non-soluble in the fluids handled by the pump it need not necessarily be of metal. But if a metal liner be used it should be non-magnetic so as not to divert the lines of magnetic flux passing between the yoke 19 and the armatures 23 through the zones 17. Because the material of which the cylinder is composed offers considerable reluctance to the passage of magnetic lines of force, an easier path for the flux is found through the zones 17 into and out of the armatures 23, and because of the thinness of the liner 27 there is no appreciable loss due to leakage of flux. It will be understood of course, that when the pump is to be used for pumping other gases or liquids which do not affect my improved material the liner 27 may be dispensed with.

While I have illustrated my improved material as employed with a reciprocating pump, it will be evident that it can also be used with any solenoid or any straight line motor. Fig. 5 illustrates another application in which the material is employed in connection with a rotary motor. The figure shows a cross sectional view of an induction motor with the armature removed but indicated by broken lines at 30. The field windings 31 and core 32 are separated from the armature by a casing 33 of my improved material in which bearings (one being indicated at 34) are provided for the armature shaft 35. A construction such as this can be used in refrigerating apparatus to provide rotary motion within a sealed casing transferring energy through the walls of the casing without any mechanical transmission of motion through the casing. In this application of my material, however, the regions of low magnetic reluctance must not run circumferentially about the casing but must run parallel to the axis of the armature, otherwise there would be a magnetic short circuit between the field poles and little or no magnetic flux would reach the armature. Instead the lines of low magnetic reluctance run lengthwise of the cylindrical casing 33 as indicated at 36. In building up a casing of this sort, it will be evident that care must be exercised to arrange the layers of fabric so that the wire stripes of the outer layers will be wider than those of the inner layers, thus forming the sector shaped regions illustrated in the cross sectional view of Fig. 6. In forming the fabric it will be necessary to compute the number of wires required to effect this result. In other words, the stripes of metal must be progressively wider across the width of the fabric and must be separated by successively wider stripes of non-metallic fabric as we proceed from the inner to the outer layers. It is possible to arrange the warp of the fabric with considerable accuracy so that the successive layers will fall one above the other as the fabric is wound widthwise about a form. However, while it is desirable that the zones of low magnetic reluctance be defined transversely by radial lines, this result is not essential to the successful use of my material. For instance, there could be and in commercial practice doubtless would be, considerable irregularity along the margins of the zones, provided the principal object is maintained of producing a path of much lower reluctance through the material into the armature than exists between successive fields of poles, so that by far a greater part of the magnetic energy will pass into the armature instead of leaking across from one pole to another. It will be noted that the thickness of the casing is much greater between poles of the armature in Fig. 6 as well as between the legs of the yokes 19 of Fig. 4. My object is to provide sufficient strength by using a casing of fairly heavy thickness but this material is machined down or otherwise reduced along the zones or regions where the wire is embedded so as to reduce the thickness at these points as much as possible and thereby reduce the magnetic reluctance. At these points not only is the material reinforced by the wire therein, but it is also reinforced by the pole pieces which bear against the wire zones, so that the cylinder is not materially weakened by such reduction of thickness.

I have described the fabric of which my material is composed as having wire stripes running lengthwise or in the warp of the material. In commercial practice it is simpler to weave a frabric with wire strands in the warp rather than in the wefts, but it would be possible and in certain cases preferable to use wire in the weft rather than in the warp and hence I do not limit myself to a fabric with wire warp strands.

I have referred to the fact that it is not essential that the wire stripes of one layer be accurately superposed upon the wire stripes

of the next adjacent layer in building up my material. Indeed in some cases I find it desirable to offset the successive layers somewhat, so as to obtain the result shown in Fig. 3 wherein the paths of low reluctance through the material, are inclined instead of being normal to the plane of the material.

Another modification is illustrated diagrammatically in Fig. 7 which shows the wire stripes of a plurality of layers of fabric, the body of the fabric being omitted. Three layers of stripes $11'$, 11^2 and 11^3 are indicated, each layer forming an angle of 60 degrees with the other two. When the material is made up of layers so disposed there will be intersecting spots where the magnetic reluctance is but one third of that through other parts of the material traversed by the stripes. The material may be built up of any number of layers thus angularly disposed and smaller angular displacements may be used to further reduce the relative reluctivity at isolated spots. In fact the layers may each be provided with a single stripe or even a single wire and the successive layers be assembled with a minute angular displacement about a common intersecting point, when the transverse path of low reluctivity at such point will have a relative reluctance value inversely proportional to the number of the angles of displacement.

I claim:

1. A material for use in magnetic apparatus consisting of a solidified plastic substance having layers of textile fabric embedded therein, the fabric being formed with interwoven stripes of soft iron wire.

2. A material for use in magnetic apparatus consisting of a series of fabric layers bound together by a solidified phenolic condensation product, each layer including a stripe of magnetizable strands woven into the fabric.

3. A material for use in magnetic apparatus consisting of a series of fabric layers bound together by a solidified phenolic condensation product, each layer including a stripe of highly para-magnetic metal woven into the fabric.

4. A material for use in magnetic apparatus consisting of a series of fabric layers bound together by a solidified phenolic condensation product, each layer including a stripe of soft iron wire woven into the fabric.

5. A material for use in magnetic apparatus consisting of a series of fabric layers bound together by a solidified phenolic condensation product, each layer including a stripe of low reluctance wire woven into the fabric, the stripes being superposed and alined.

6. A material for use in magnetic apparatus consisting of a series of fabric layers bound together with a solidified phenolic condensation product, and each layer including a stripe of low reluctance wire woven into the fabric, the stripe of each layer being disposed in a pre-determined geometric relation to the stripes of adjacent layers.

7. A material for use in magnetic apparatus consisting of a series of fabric layers bound together by a solidified phenolic condensation product and each layer including a stripe of iron wire woven into the fabric, said stripes being disposed in superposed relation, and a protective coating on the surface of the material.

8. A material for use in magnetic apparatus consisting of a series of fabric layers bound together by a solidified phenolic condensation product and each layer including a stripe of iron wire woven into the fabric, said stripes being disposed in superposed relation, and a non-magnetic metallic coating on the surface of the material.

9. A cylinder for use in a magnetic apparatus consisting of a length of fabric having a stripe of iron wire woven therein, the fabric being spirally wound to form a coil and the whole being bound together by a solidified phenolic condensation product.

10. A cylinder for use in magnetic apparatus consisting of a hollow cylindrical coil of fabric bound by a solidified phenolic condensation product, the fabric including a circumferentially disposed stripe of iron woven into the fabric.

11. A cylinder for use in a magnetic apparatus consisting of a length of fabric having a stripe of iron wire woven therein, the fabric being spirally wound to form a hollow cylindrical coil and the whole being bound together by a solidified phenolic condensation product, and a protective coating on the inner surface of the cylinder.

12. The process of making material for magnetic apparatus which consists in weaving a fabric of textile material with stripes of metal threads interwoven therein, impregnating the fabric with a phenolic condensation product, arranging the fabric in layers with the stripes in superposed and alined relation, and subjecting the whole to heat and pressure.

13. The process of making material for magnetic apparatus which consists in impregnating textile fabric with a phenolic condensation product, the fabric having stripes of metal interwoven therein, arranging the fabric in layers with the stripes of each layer disposed in a pre-determined geometric relation to the stripes of adjacent layers, and subjecting the whole to heat and pressure to solidify the phenolic condensation product.

14. The process of making material for magnetic apparatus which consists in impregnating textile fabric having stripes of metal interwoven therein, with a phenolic condensation product, arranging the fabric in layers with the stripes of the several layers disposed to superposed and alined rela-

tion, and subjecting the whole to heat and pressure.

15. The process of making material for magnetic apparatus which consists in impregnating with a phenolic condensation product a textile fabric having stripes of metal interwoven therein, winding the fabric about a form with the stripes of metal in the several coils of the winding disposed in superposed and alined relation, and subjecting the whole to heat and pressure.

16. A material for use in magnetic apparatus consisting of a solidified plastic substance having layers of textile fabric embedded therein, the fabric being formed with interwoven stripes of magnetizable material.

LOUIS H. ROLLER.

Aug. 4, 1959 A. RICHTER ET AL 2,898,485

MAGNETIC CLUTCH

Filed Sept. 17, 1957

Fig. 1.

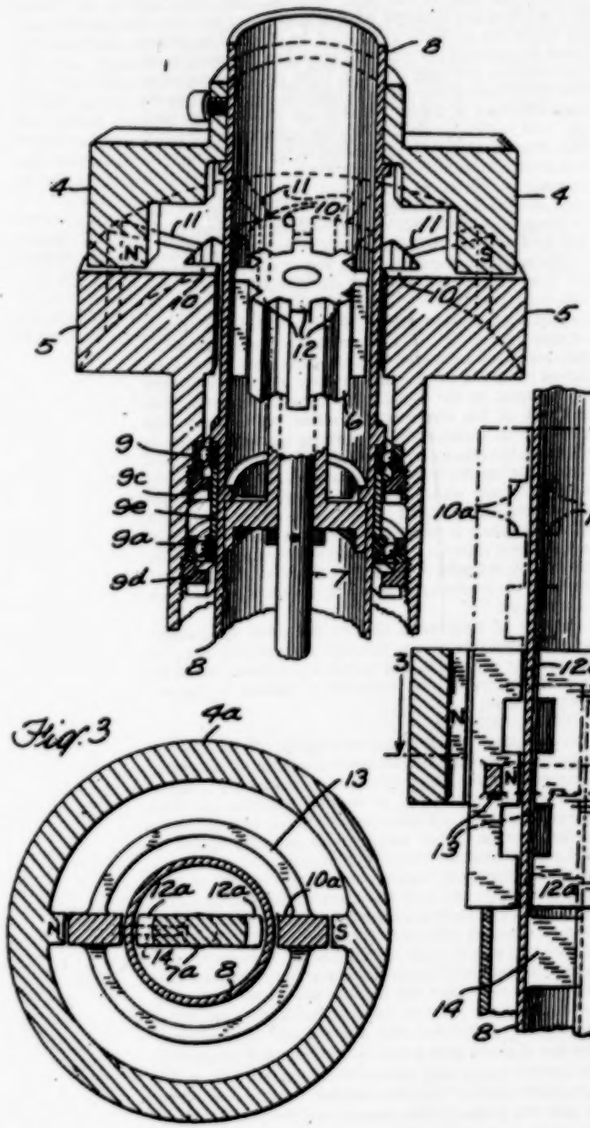

Fig. 2.

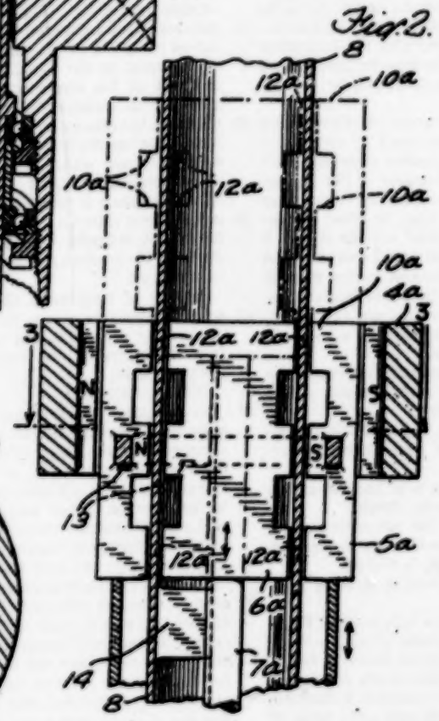

Fig. 3

United States Patent Office

2,898,485

Patented Aug. 4, 1959

2,898,485

MAGNETIC CLUTCH

Albert Richter, Lynbrook, and Vincent Ordorica, Brooklyn, N.Y., and Donald Gertz, Oak Ridge, Tenn., assignors to Sperry Rand Corporation, Ford Instrument Company Division, Long Island City, N.Y., a corporation of Delaware

Application September 17, 1957, Serial No. 684,490

9 Claims. (Cl. 310—104)

This invention relates to a magnetic clutch and particularly to a system for transmitting motion from one member to another member in a magnetic flux field.

Heretofore motion transmitting systems have depended on the employment of linear or rotating synchronous motors wherein the motion is transmitted from a stator to the controlled rotor element by the magnetic field as a function of supply frequency. In most control applications, the required speeds of motion are too slow to permit control with motors of conventional design operating from normally available supply frequencies. Various expedients have been adopted to overcome the limitations of the synchronous motor control such as the provision of speed reducing gear trains and low frequency power suppliers.

According to this invention, a motor of conventional design may be employed to impart linear or rotary motion to a member fabricated of magnetic material which transmits the motion to a second member of like character by means of magnetic field produced by a stationary magnetic member. Brushes, slip rings or other components subject to wear are not required and the system is adapted to be driven by conventional power sources. The system is particularly adapted to transmit motion through a metallic non-magnetic wall interposed as between the two members although other applications are anticipated.

One object of the invention is to provide a magnetic clutch of single and durable design.

Another object is to provide a magnetic clutch operative in a field produced by a stationary magnet which is thus independent of the supply frequency.

Another object of the invention is to provide an improved magnetic clutch capable of transmitting and responding to rotary motion.

A further object of the invention is to provide an improved linear motion type of magnetic clutch.

Other objects and advantages of the invention may be appreciated from the following specification in conjunction with the accompanying drawings, in which

Fig. 1 is a perspective in partial section showing a rotary type magnetic clutch.

Fig. 2 is a vertical section taken on line 2—2 of Fig. 3 showing linear motion type of magnetic clutch; and

Fig. 3 is a section in plan of the clutch shown in Fig. 2.

As shown in Fig. 1, the magnetic clutch includes a stationary magnet 4, an outer rotary member 5 rotatable in flux linking adjacency to the north and south poles of the stationary magnet and an inner rotary member 6 mounted on a shaft 7 and concentrically disposed within the outer member. A non-magnetic wall 8 is interposed between the members. The stationary magnet is bolted to the wall 8 and may be of the permanent (as shown) or electro-magnetic type. Bearings 9 and 9*a* are supported between the member 5 and the wall 8 by means of rings 9*c* and 9*d* threadably secured to the member 5 and a brace 9*e* fitted about the wall between the bearings.

The rotary members are made of a magnetic material of minimal magnetic retention such as soft iron. The

outer rotary member 5 has circumferentially mounted on its inner face a series of inwardly projecting elements 10 which are established by the field as salient poles. The poles are magnetically insulated by non-magnetic sections 11 which are interposed between the poles so as to preclude a flux path in the outer member. The inner rotary member 6 is provided with corresponding pole pieces 12 which are similarly established by the field as salient poles of opposing polarity with respect to the corresponding poles on the outer member. The polarized members thereby present a flux path of minimum reluctance to the magnetic lines of force. Because the lines of force seek the least reluctance path across the poles of the magnet, they tend to align the salient poles of the inner and outer members. It is apparent, therefore, that if the outer member is rotated at the desired speed as by a motor (not shown) an alignment torque, which is proportional to the square of the flux density, will be produced which will tend to rotate the inner member in synchronism.

The magnetic clutch shown in Figs. 2 and 3 is arranged for linear motion transmission and response. The outer and inner members 5*a* and 6*a*, respectively, are concentrically disposed between the poles of an uninsulated, stationary magnet 4*a*. The salient poles 10*a* of the outer member 5 are supported by connecting rings 13 and the salient poles 12*a* of the inner member are axially aligned with respect to the direction of imparted motion. The tendency of the corresponding salient poles of the two members to maintain their opposing positions so as to minimize the reluctance presented to the magnetic lines of force between the poles of the magnet is present in this form of clutch whose structure is slightly modified for linear motion operation. The outer member may be caused to move in linear translation as by a lead screw or rack (not shown). An inwardly projecting key 14 on the wall 8 engaging a keyway in the shaft of the inner member 6*a* precludes rotation of the inner member on its actuation.

It must be understood that various other applications and embodiments of the principle of invention may be effected by persons skilled in the art without departing from the scope of the invention as defined in the appended claims.

What is claimed is:

1. A motion transmitting mechanism comprising an elongated non-magnetic tubular wall defining a container, a control element mounted in said container for longitudinal movement therein, a magnet mounted in fixed spaced relation to said container concentric with the outer surface thereof, a first magnetizable element secured to said control element within said container for movement in unison therewith, means preventing rotation of said control element and said first magnetizable element during longitudinal movement thereof, a second magnetizable element disposed between said magnet and the outer surface of said tubular wall for longitudinal movement with respect thereto, said magnet being provided with diametrically opposed positive and negative pole pieces projecting radially inwardly from an annulus, said first magnetizable element being provided with diametrically opposed positive and negative pole pieces, and said second magnetizable element comprising diametrically opposed pole pieces connected together by a ring member, the said pole pieces of said first magnetizable element and the pole pieces of said second magnetizable element being adapted to be magnetized by said magnet and when magnetized to radially align whereby longitudinal movement of one of said magnetizable elements will be imparted to the other of said magnetizable elements.

2. A motion transmitting mechanism as defined in claim 1 in which said magnet comprises a permanent

magnet having a single pair of diametrically opposed positive and negative pole pieces.

3. A motion transmitting mechanism comprising an elongated non-magnetic tubular wall defining a container, a control element mounted in said container for longitudinal movement therein, a magnet mounted in fixed position with respect to said container, a first magnetizable element secured to said control element within said container for movement in unison therewith, a second magnetizable element disposed outwardly of said container for longitudinal movement with respect thereto; said magnet, said first magnetizable element and said second magnetizable element being each provided with positive and negative pole pieces; the said pole pieces of said first magnetizable element and the said pole pieces of said second magnetizable element being adapted to be magnetized by said magnet and when magnetized to radially align whereby longitudinal movement of one of said magnetizable elements will be imparted to the other of said magnetizable elements.

4. A motion transmitting mechanism as defined by claim 3 in which said magnet comprises a permanent magnet having a single pair of diametrically opposed positive and negative pole pieces.

5. A motion transmitting mechanism as defined by claim 4 in which said first magnetizable element comprises a single pair of diametrically opposed positive and negative pole pieces.

6. A motion transmitting mechanism as defined by claim 5 in which said second magnetizable element comprises a single pair of diametrically opposed positive and negative pole pieces.

7. A motion transmitting mechanism as defined by claim 3 in which said first magnetizable element comprises a single pair of diametrically opposed positive and negative pole pieces.

8. A motion transmitting mechanism as defined by claim 7 in which said second magnetizable element comprises a single pair of diametrically opposed positive and negative pole pieces.

9. A motion transmitting mechanism as defined by claim 3 in which said second magnetizable element comprises a single pair of diametrically opposed positive and negative pole pieces.

References Cited in the file of this patent

UNITED STATES PATENTS

700,839	Sessions	May 27, 1902
1,298,966	Knowlson	Apr. 1, 1919
1,568,305	Williams	Jan. 5, 1926
1,724,272	Ford	Aug. 13, 1929
2,636,139	Winget	Apr. 21, 1953

FOREIGN PATENTS

65,594	Switzerland	May 26, 1913
1,008,834	France	Feb. 27, 1952

United States Patent [19]

Isbell

[11] **3,847,502**

[45] **Nov. 12, 1974**

[54] **CONVEYING AND FORCE PRODUCING MEANS**

[76] Inventor: **Joe A. Isbell**, 5299 Mesquite Rd., Memphis, Tenn. 38117

[22] Filed: **Dec. 2, 1972**

[21] Appl. No.: **317,078**

Related U.S. Application Data

[63] Continuation-in-part of Ser. No. 185,533, Oct. 1, 1971, abandoned.

[52] **U.S. Cl.** **415/92**, 415/202, 417/410, 310/104

[51] **Int. Cl.** **F01d 1/00**

[58] **Field of Search** 104/156; 418/158; 415/92, 415/202, 152; 310/104

[56] **References Cited**

UNITED STATES PATENTS

2,669,668	2/1954	Okulitch et al.	310/104
719,305	1/1903	Collins	415/92
3,074,687	1/1963	Garrison et al.	415/152
3,378,710	4/1968	Martin, Jr.	310/104
3,496,871	2/1970	Stengel	417/410

Primary Examiner—C. J. Husar
Attorney, Agent, or Firm—John R. Walker, III

[57] **ABSTRACT**

A means for conveying an object or producing a force. The conveying and force producing means includes a movable metal slug slidably mounted in a tube. There is provided a fluid system to cause movement of the slug in the tube. A magnet on the outside of the tube is coupled by electromagnetic force to the slug and follows the movements of the slug to produce a force and perform work, such as moving an object. An alternate embodiment is provided in which the magnet is on the inside of the tube and the metal slug is on the exterior of the tube. A third embodiment is provided in which the tube is endless, i.e., having the shape of a ring, and a plurality of spaced apart slugs are forced to travel within the endless tube, i.e., by the fluid system. A plurality of outer members is included, i.e., one for each slug which are interconnected to a concentric common shaft. The outer members or the slugs are magnetized to cause the outer member to follow the spinning slugs, thus rotational force is imparted to the shaft.

17 Claims, 16 Drawing Figures

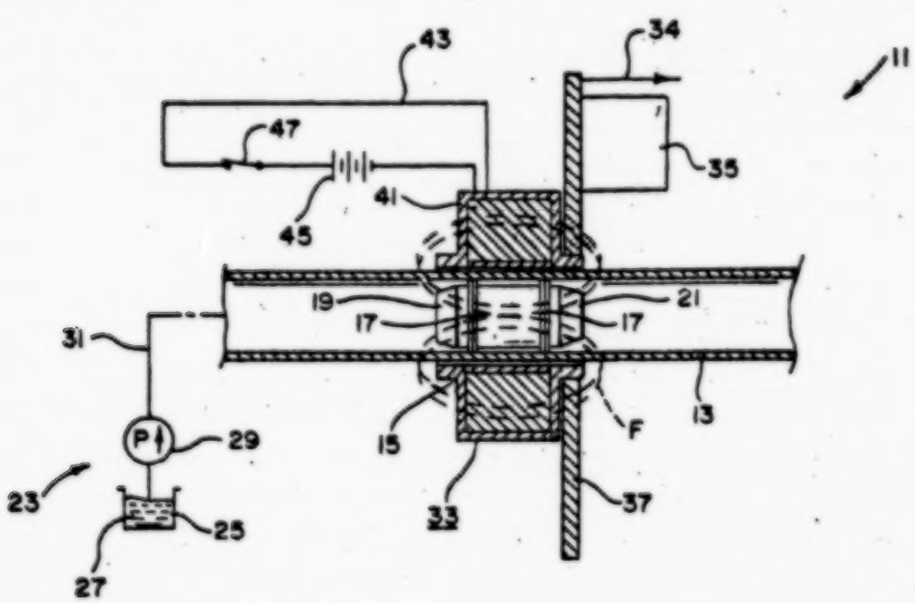

FIG. 1

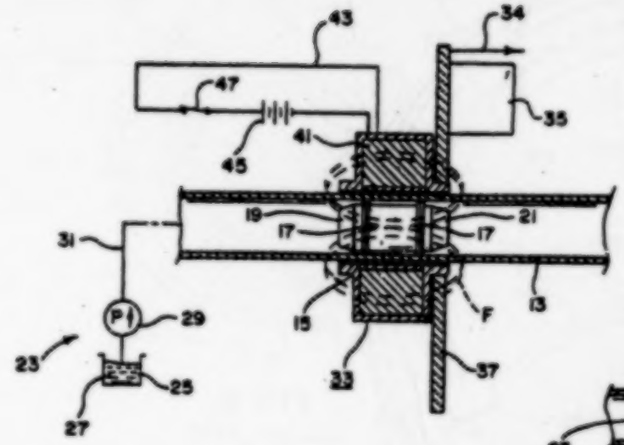

FIG. 3

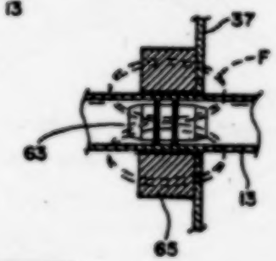

FIG. 2

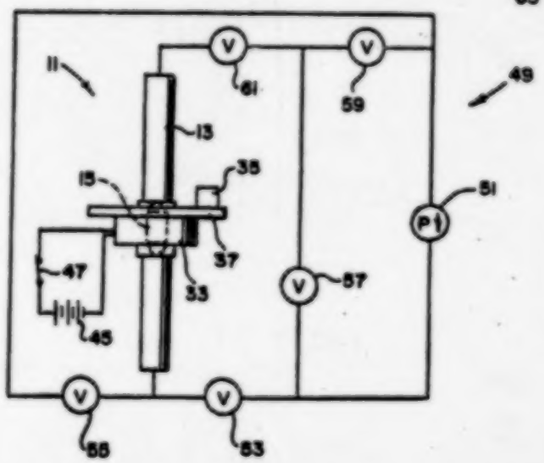

FIG. 4

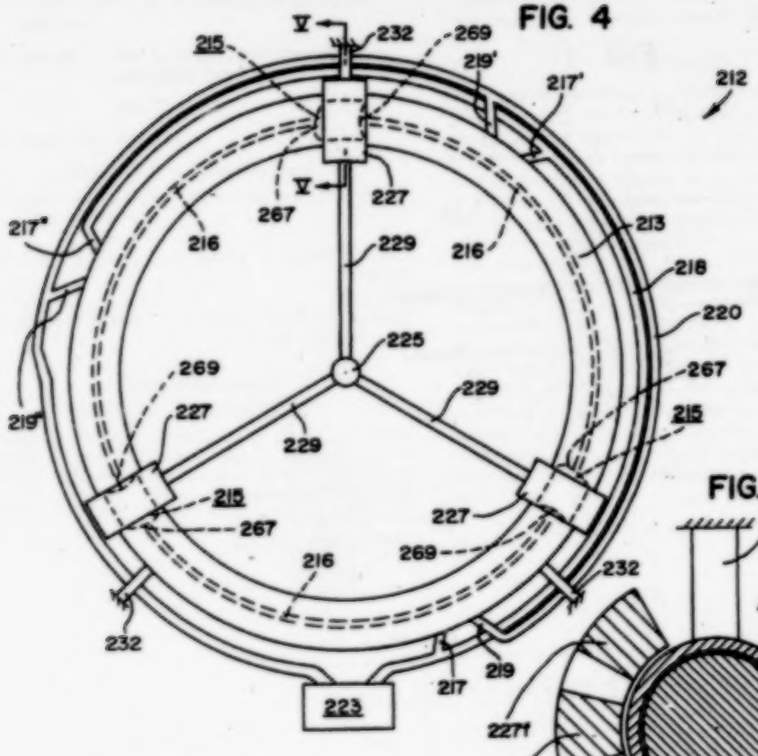

FIG. 5

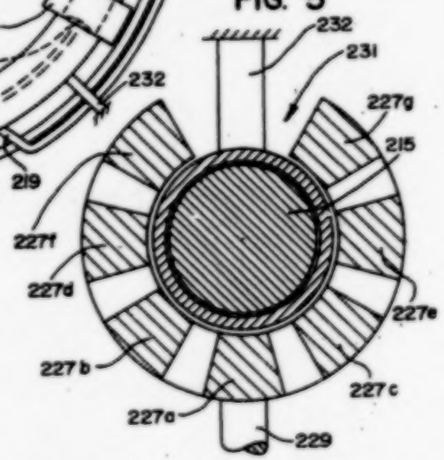

FIG. 6

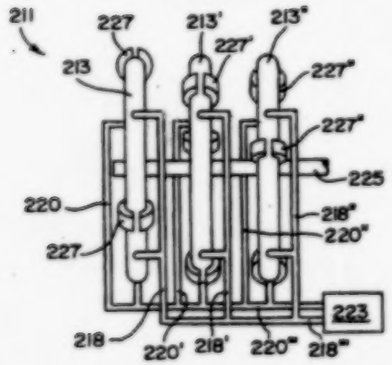

FIG. 7

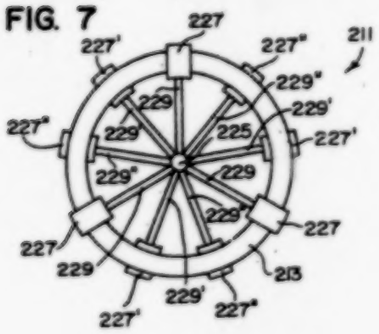

FIG. 8

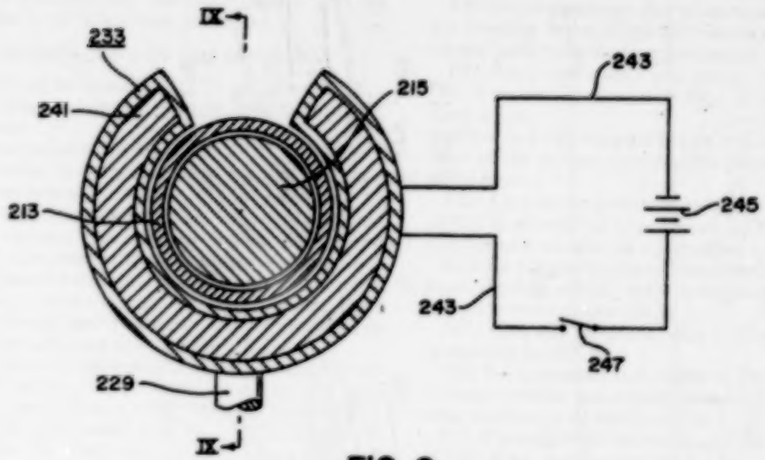

FIG. 9

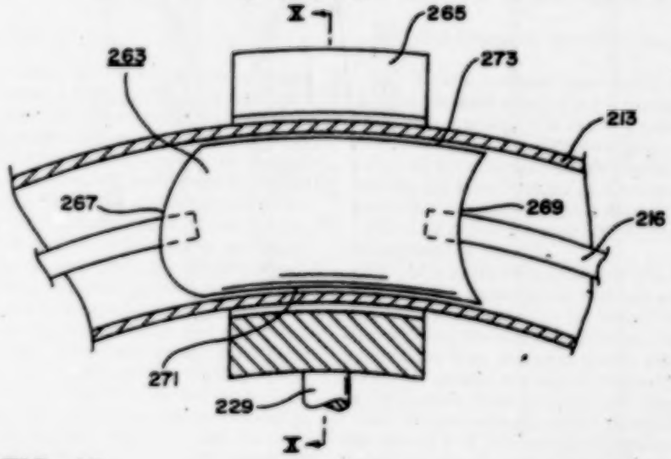

FIG. 10

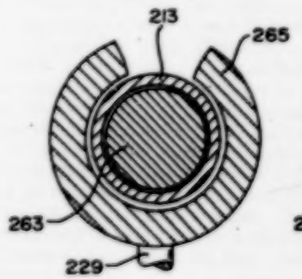

FIG. 11

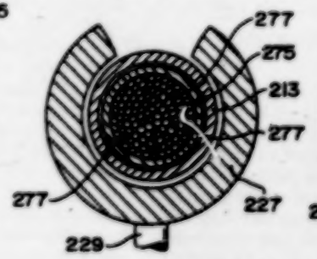

FIG. 12

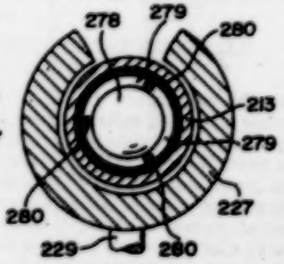

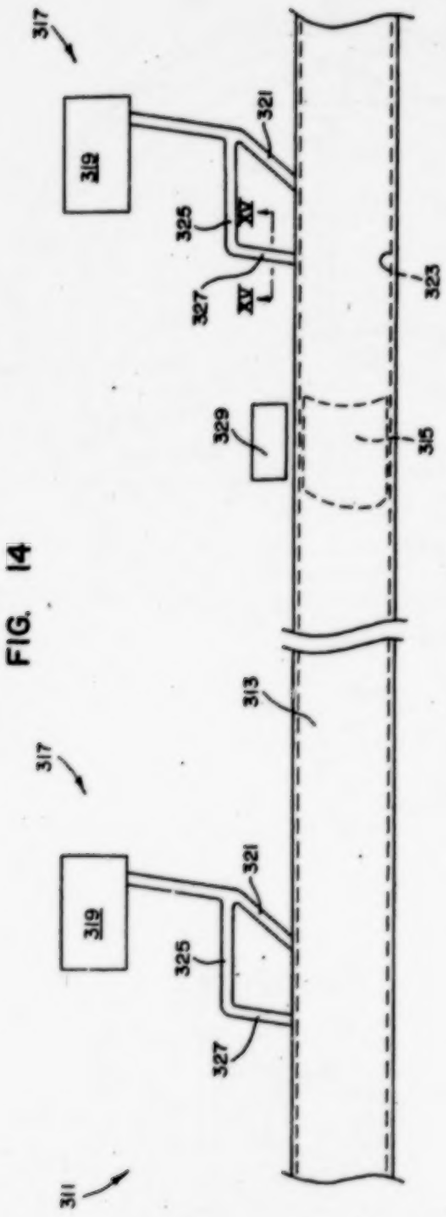

FIG. 14

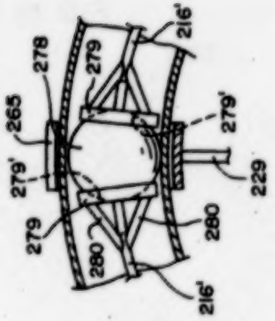

FIG. 13

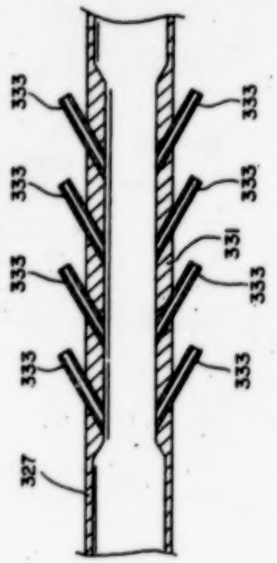

FIG. 16

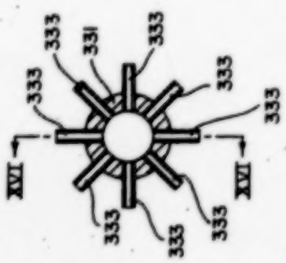

FIG. 15

1

CONVEYING AND FORCE PRODUCING MEANS

CROSS-REFERENCE TO RELATED APPLICATION

This application is a continuation-in-part of my copending application entitled *CONVEYING AND FORCE PRODUCING MEANS*, Ser. No. 185,533. filed Oct. 1, 1971, and now abandoned.

BACKGROUND OF THE INVENTION

1. Field of the Invention

This invention relates to conveying and force producing means.

2. Description of the Prior Art

Heretofore, in fields such as the elevator field, there have been hydraulic elevators in which either air or hydraulic fluid drives a piston which is directly connected to the elevator cab to cause raising and lowering thereof. Also, another type of commonly known elevator has been the electric motor driven elevator in which the electric motor, through pulleys and cables, which support the cab and are attached thereto, moves the elevator upwardly and downwardly.

A preliminary patentability search revealed the following U.S. Pat. Nos.: 573,820, issued Dec. 22, 1896; 613,627, issued Nov. 1, 1898; 827,282, issued July 31, 1906; 1,231,075 issued June 26, 1917; 2,222,685, issued Nov. 26, 1940; and 2,927,661, issued Mar. 8, 1960. None of the above patents show or suggest applicant's device.

SUMMARY OF THE INVENTION

The present invention is directed towards providing a means for producing a force and perform work such as conveying an object. It is an object of the present invention to provide such a conveying or force producing means in which a driving member or slug is not coupled directly to the driven structure, but instead is coupled electro-magnetically. Thus, one of the concepts of the present invention is to provide a tube, a metallic slug slidably mounted in the tube, a fluid system for supplying fluid to the tube to move the slug, a movable object, and a magnet slidably mounted on the exterior of the tube adjacent the slug for magnetically coupling the object to the slug for moving the object to follow the movements of the slug. Also, it is a concept of the present invention that the magnet and the slug may be reversed, that is, the magnet may be disposed on the interior of the tube and the slug on the outside. To clarify, the magnet and the slug coact together to create a magnetic means for magnetically coupling the magnet to the slug to cause the magnet to move along with the slug. It should be apparent that the slug includes a magnetic substance capable of being magnetized or attracted by a magnet. Further, the tube may be endless, i.e., being in the form of a ring, with a plurality of spaced apart slugs which are forced to travel or spin within the tubular ring by the fluid system. This latter concept also includes a plurality of outer members, i.e., one for each slug, which are interconnected to a shaft that is concentrically disposed within the tubular ring. Either the outer members or the slugs are magnets to magnetically couple them together. This causes the outer members to follow the spinning slugs, thus rotational force is imparted to the shaft. Other objects of the present invention will be more apparent from the following description and claims.

2

BRIEF DESCRIPTION OF THE DRAWINGS

FIG. 1 is a vertical cross sectional view of the means of the present invention shown as arranged for horizontal conveying or for producing a horizontal force, and with certain parts being shown schematically.

FIG. 2 is an elevational view of the means of the present invention shown as applied to an elevator and with certain parts being shown schematically.

FIG. 3 is a view similar to a portion of the view of FIG. 1 showing an alternative form of the present invention. i.e.,

FIG. 4 is a side elevational view of a third embodiment of the present invention for producing a rotational force.

FIG. 5 is a sectional view taken as on the line V—V of FIG. 4, showing the inner member as a metallic slug and the outer member as a permanent magnet.

FIG. 6 is a front elevational view of the third embodiment showing several units as depicted in FIG. 4 ganged to one common shaft.

FIG. 7 is a side elevational view of the ganged units as depicted in FIG. 6.

FIG. 8 is a sectional view similar to FIG. 5, showing the inner member as a metallic elongated slug and the outer member as an electromagnet.

FIG. 9 is a sectional view taken as on the line IX—IX of FIG. 8 but showing the inner member as a permanent magnet and the outer member as a metallic ring.

FIG. 10 is a sectional view taken as on the line X—X of FIG. 9.

FIG. 11 is a sectional view similar to FIG. 10 but showing the inner member as a non-magnetic cannister filled with granules of a metallic substance and the outer member as a permanent magnet.

FIG. 12 is a sectional view also similar to FIG. 10 but showing the inner member as a metal sphere and the outer member as a permanent magnet.

FIG. 13 is a view similar to FIG. 9 except showing the embodiment of FIG. 12.

FIG. 14 is a side elevational view of a fourth embodiment which is similar to the principal embodiment but showing a steam generator for initially causing the slug to move along the tube and additional steam generators downstream from the initial one to provide a booster means for causing the slug to continue to move along as the pressure from the initial one diminishes.

FIG. 15 is an enlarged sectional view taken as on the line XV—XV of FIG. 14 showing structure for cooling and drying the steam to cause a turbulent tornado action within the tube.

FIG. 16 is a sectional view taken as on the line XVI—XVI of FIG. 15.

DESCRIPTION OF THE PREFERRED EMBODIMENT

Referring first to FIG. 1 wherein the conveying means 11 of the present invention is shown to move an object or cause a force to act horizontally, the conveying means 11 includes a tube 13, which is shown as a cylindrical tube, although it may be other shapes, such as being square in cross section, without departing from the spirit and scope of the present invention. An inner member or slug 15 is slidably mounted in tube 13 with O rings 17 or the like being mounted in grooves, not shown, in slug 15 to form a seal between slug 15 and

the interior of tube 13 to prevent fluid from passing between slug 15 and the tube 13. Slug 15 is preferably formed from a metal which is not permanently magnetized, e.g., a non-magnetized piece of steel or ferromagnetic substance, but may be permanently magnetized, if desired, e.g., having an opposite polarity with respect to the magnet 33 for increasing the coupling force therebetween. Slug 15 is preferably, though not necessarily, tapered as at 19 and 21 adjacent the opposite ends thereof. In the example shown in FIG. 1, the slug 15 is circular in cross section, although it will be understood that the cross sectional shape of the slug should preferably correspond to the cross sectional shape of the tube 13.

A fluid system 23 is provided for supplying fluid to tube 13 to move slug 15. Thus, in the example shown in FIG. 1, fluid system 23 includes a reservoir 25 containing hydraulic fluid 27 and a pump 29 interposed in a suitable conduit 31 leading from the reservoir 25 to one end of tube 13 for supplying hydraulic fluid under pressure to one end (the end to the left in FIG. 1) of slug 15 so that the slug 15 moves to the right, as viewed in FIG. 1, along the tube 13. It will be understood, of course, that if desired, a more elaborate fluid system 23 may be provided without departing from the spirit and scope of the present invention, for example, to reverse or stop the slug 15 additional conduits, valves, etc., not shown, well known to those skilled in the art, may be provided.

An outer member, preferably in the form of a magnet 33 is slidably mounted on the exterior of tube 13 adjacent slug 15 to provide a magnetic field F in which slug 15 is disposed so that as slug 15 moves along tube 13, magnet 33 will move along with the slug 15 and provide a horizontal force 34. This force 34 can be utilized to move an object 35 either directly or through a plate 37 attached to and supported by magnet 33, and which plate 37 is also itself an object. It will be understood that with the plate 37 disposed as shown in FIG. 1, object 35 should be fixed thereto by suitable means, not shown. Also, any other desired work may be done by force 34, as by the force acting to pull or push any desired object.

Magnet 33 is preferably an electro-magnet having the usual coils 41 energized through conductors such as conductors 43 by a source of electricity connected thereto, as battery 45. It will be understood that to disconnect magnet 33 from slug 15, it is only necessary to open switch 47 which is interposed in conductors 43. Also, it will be understood that, if desired, magnet 33 may be a permanent magnet, without departing from the spirit and scope of the present invention. In addition, it should be pointed out that tube 13 is formed of a non-magnetic substance, e.g., aluminum, for allowing free passage of lines of force therethrough to couple the slug 15 with the magnet 33.

Referring now to FIG. 2, there is shown the conveying means 11 of the present invention in another application, that is, being used as an elevator, in which case the tube 13 is disposed in a vertical position to raise and lower the object 35. The fluid system 49 is more elaborately shown for causing upward and downward movement of the slug 15. Thus, fluid system 49 includes a pump 51 for pumping the fluid, as hydraulic fluid, compressed air or the like, and suitable conduits shown, with valves 53, 55, 57, 59 and 61 interposed therein, for directing the fluid to the upper or lower end of the slug 15 to move the slug upwardly or downwardly. Thus, it will be understood that with pump 51 pumping in the direction shown, and with the valves 55 and 57 being closed and with valves 53, 59 and 61 being open, the slug 15 will move upwardly to carry magnet 33, plate 37 and object 35 upwardly. Then, it will be understood that if it is desired to stop the movement of slug 15, plate 37 and object 35, the valves 53, 55 and 61 are closed and valves 57 and 59 are disposed in an open position to bypass the fluid back to the pump 51. Also, when it is desired to lower slug 15, plate 37 and object 35, valves 53 and 59 are closed and valves 55, 57 and 61 are opened. In addition, it will be understood that magnet 33 may be released from following the movements of slug 15 by opening switch 47.

Referring now to FIG. 3, which shows a modification of the present invention in which the inner member is in the form of a magnet 63 in the interior of tube 13 and the outer member is in the form of metallic slug 65 on the exterior of the tube 13, magnet 63 is in the form of a permanent magnet although it may be in the form of an electro-magnet without departing from the spirit and scope of the present invention. Slug 65 is preferably formed from a metal which is not permanently magnetized, e.g., a non-magnetized piece of steel or ferromagnetic substance, but may be permanently magnetized, if desired, i.e., having an opposite polarity with respect to the magnet 63 for increasing the coupling force therebetween. Slug 65 is preferably annular in shape and slidably mounted on the exterior of tube 13. If it is desired to reduce friction, slug 65 may be provided with non-magnetic rollers, not shown, engaging the outer surface of tube 13. The remaining portions of the system, not shown, in FIG. 3 may be as previously disclosed for the embodiments of FIGS. 1 and 2, and may be utilized for conveying, elevating, or force producing purposes in the same manner as that described for the embodiments of FIGS. 1 and 2.

FIGS. 6 and 7 of the drawings depict a third embodiment of the present invention character referenced therein by the numeral 211 and herein described as a conveying and rotary force producing assembly. The assembly 211 includes at least one unit 212, as depicted in FIGS. 4 and 5 of the drawings, comprising an endless tube 213 similar to the tube 13 but having the shape of a ring, as clearly shown in the drawings. Additionally, a plurality of spaced apart inner members or a first set of members 215 are provided and are received within the endless tube 213. The inner members 215 are fixedly attached one to the other by a plurality of arcuate shafts 216 to establish a predetermined spaced interval therebetween for reasons yet to be disclosed.

The endless tube 213 preferably is provided with a plurality of inlet conduits 217, 217', 217'' and a plurality of outlet conduits 219, 219', 219''. An intake manifold 218 is included and communicates the inlet conduits 217, 217', 217' one with the other. An exhaust manifold 220 is included which communicates the outlet conduits 219, 219', 219'' one with the other. A fluid system 223 is provided for supplying fluid to the intake manifold 218, thence to the endless tube 213 to move the first set of members or inner members 215. The fluid system 223 may be somewhat similar to the previously described fluid system 23 or it may be in the form of a steam generator or the like. In other words, the endless tube 213 may be suitably adapted for receiving steam to drive the inner members 215 or it may be

adapted to receive other fluids, e.g., hydraulic fluid or the like. Accordingly, the fluid system 223 will be constructed in accordance with procedures well known to those skilled in the art pertaining to the particular fluids selected. However, it should be pointed out that the endless inner and adjacent structure, e.g., manifolds 218, 220, should be constructed from a non-magnetic substance which will readily allow uninterrupted passage of magnetic lines of force. Additionally, the inlet conduits 217', 217'' or the outlet conduits 219', 219'' may optionally be deleted from the unit 212 without departing from the spirit and scope of the present invention. In this event, it would be obvious to delete the appropriate manifold 218 or 220 also.

The unit 212 also includes a suitably journaled shaft 225 which is received within the ring formed by the endless tube 213 and with the endless tube 213 being concentric to the shaft 225. A plurality of spaced apart outer members or a second set of members 227 are provided and are fixedly attached to the shaft 225. More specifically, a plurality of spokes 229 are included which radiate outwardly from the shaft 225 with the inner ends thereof being fixedly attached to the shaft 225, as by welding or the like. The respective outer member 227 are fixedly attached to the outer ends of the spokes 229, as by welding or the like. The second set of members 227 are disposed adjacent the exterior of the endless tube 213 at locations along the circumference thereof which respectively are in proximity to the first set of members 215. In other words, the predetermined spaced interval of the inner members 215 alluded to above corresponds to the spaced apart distance of the second set of members 227. Either the first set of members 215 or the second set of members 227 constitute magnets for respectively magnetically coupling the other set of members therewith to cause the second set of members 227 to move along with the first set of members 215, thus a rotary force is imparted to the shaft 225.

From FIGS. 4 and 5 of the drawings, it may be seen that the first set of inner members 215 have an elongated cylindrical shape thereto. members 215 are preferably formed from a metal which is not permanently magnetized, e.g., a non-magnetized piece of steel or ferro-magnetic substance, but may be permanently magnetized, if desired, i.e., having an opposite with respect to the outer member 227. Additionally, the second set or outer members 227 preferably are individually formed from a plurality of permanently magnetized ferromagnetic substances 227*a* – 227*g* which may be suitably arranged to have the magnetic forces thereof additive and establishing an opening 231. The opening accommodates the inlet and outlet conduits 217, 219 as well as suitable support structure, e.g., brace members 232 preferably formed from a non-magnetic substance. In other words, the brace members 232 may pass through the openings 231 to support the endless tube 213 in a fixed disposition with respect to suitable frame structure (not shown).

From FIGS. 6 and 7 of the drawings, it may be seen that the assembly 211 includes at least a plurality of endless tubes 213, 213', and 213''. The plurality of endless tubes 213, 213', 213'' are arranged one behind another and have the respective spokes 229, 229', 229'' fixedly attached to the common shaft 225 which increases the force being produced therewith. It should be pointed out that the endless tubes 213, 213', 213'' respectively have intake manifolds 218, 218', 218'' and exhaust manifolds 220, 220', 220'' communicated therewith, i.e., substantially as above disclosed for the manifolds 218, 220. From FIG. 6 of the drawings, it may be seen that the intake manifolds 218, 218', 218'' communicate with a common intake manifold 218'' and the exhaust manifolds 220, 220', 220'' communicate with a common exhaust manifold 220'''. Further, the preferred arrangement of the outer members 227, 227', 227'' is depicted in FIG. 7. The tubes 213', 213'' each have inner members (not shown) substantially identical to the structure above described for the inner members 215.

An optional arrangement of the above-disclosed structure is depicted in FIG. 8 of the drawings. In other words, the outer members may comprise electromagnets 233 similar to the electro-magnet 33 previously described in the principal embodiment. In other words, the electro-magnet 233 has the usual coils 241 energized through conductors such as conductors 243 by a source of electricity connected thereto, as battery 245. It will be understood that to disconnect magnet 233 from the inner member 215, it is only necessary to open switch 247 which is interposed in conductors 243.

In this regard, it should be understood that the inner members 215 may optionally be spherical shaped without departing from the spirit and scope of the present invention.

Another optional arrangement of the above-disclosed structure is depicted in FIGS. 9 and 10 of the drawings wherein the inner members 263 are formed from a metal which is permanently magnetized, e.g., a permanently magnetized piece of steel or ferromagnetic substance, and outer members 265 are formed from a non-magnetized piece of steel or ferromagnetic substance. Alternatively, outer members 265 may be formed from a permanently magnetized metal, i.e., having an opposite polarity with respect to inner members 263 for increasing the coupling force therebetween. Therefore, the outer members 265 are magnetically coupled to the inner members 263 and move along therewith in the same manner as the previously described inner and outer members 63, 65.

In this regard, it should be pointed out that the inner members 215 and/or 263 constitute elongated slugs having leading and trailing ends as depicted in FIG. 9 of the drawings by the respective numerals 267, 269, i.e., the direction of rotation of the unit 212 being counterclockwise, as when viewed in FIG. 4 of the drawings. More specifically, the inner members 215 and/or 263 have inner and outer sides 271, 273 thereto. The inner side 271 is directed toward the journaled shaft 225 and the outer side is remote therefrom. Additionally, the leading ends 267 are convex-shaped, having a non-regular radius curvature thereto, i.e., the radius gradually increases from a point adjacent the longitudinal centerline of the slugs 215, 263 toward the outer side 273 thereof and the radius curvature gradually decreases from the longitudinal centerline toward the inner side 271. In other words, the convex leading ends 267 have a somewhat teardrop cross sectional shape thereto substantially as depicted in FIG. 9 of the drawings. Additionally, the trailing ends 269 have a concave shape or a regular radius curvature thereto substantially as depicted in FIG. 9 of the drawings.

Another optional arrangement of the above disclosed structure is depicted in FIG. 11 of the drawings wherein the first set of members or inner members may constitute non-magnetic cannisters 275, e.g., the cannisters 275 may be formed from aluminum or the like. The cannisters 275 are filled with granules of a magnetic substance 277, e.g., soft iron or the like. In other words, the cannister 275 would be less susceptible to wear than the soft iron 277. Additionally, it should be understood that the inner members may be formed from a magnetic substance, e.g., soft iron or the like, having a cladding of extremely wear resistant material thereabout, e.g., steel or the like.

In this regard, it should be pointed out that centrifugal force causes the inner members to tend to be thrown outwardly from the shaft 225, i.e., creating additional wear on the outer sides 273 thereof. Therefore, it may be desirable, in order to compensate for a given centrifugal force, to concentrate the magnetic force of the outer members 227 adjacent the spokes 229. More specifically, I anticipate that certain of the magnets depicted in FIG. 5 of the drawings may be omitted without departing from the spirit and scope of the present invention, e.g., the magnets 227*d*, 227*e*, 227*f*, 227*g*. It should be understood that the magnetic force of the remaining magnets, e.g., 227*a*, 227*b*, 227*c* would be calculated to counteract the centrifugal force of the inner member 215 at a specified rpm of the shaft 225 in a manner obvious to those skilled in the art. In other words, the outer members 227 are magnetized so that the poles are spaced radially, e.g., the south pole adjacent the inner side of the magnet and the north pole adjacent the outer side. Also, the same principle is preferably applied to the electro-magnet 233. In other words, the magnet 233 may be wound in a manner known to those skilled in the art so that the magnetic force will counteract the centrifugal force.

I anticipate that under certain conditions it may be desirable that the inner members be spherical in shape, i. e., like the member 278 depicted in FIGS. 12 and 13 of the drawings. Like inner members 215, which are attached one to the other by a plurality of arcuate shafts 216, the spherical members 278 are intercoupled by a plurality of arcuate shafts 216′ to maintain the spacing between spherical members 278. However, the coupling between shafts 216′ and spheres 278 is such that the spheres are adapted to rotate so that they can roll on the interior of tube 213. Thus, at the ends of shafts 216′ are respectively provided rings 279 fixedly attached to shafts 216′ by supports 280, and which rings 279 have sockets 279′ shaped to conform to the curvature of spheres 278 so that the spheres can easily rotate therein. It will be noted that rings 279 are smaller in diameter than spheres 278 and fit on the opposite sides of the spheres with the rings being spaced from the interior surface of tube 213. It will be understood that, if desired, shafts 216′, supports 280, and rings 279 may be omitted without departing from the spirit and scope of the present invention. Additionally, it should be pointed out that the outer members 227 depicted in FIGS. 11, 12 and 13 of the drawings are preferably formed from a permanently magnetized metal, e.g., steel or a ferro-magnetic substance having lines of force coupling the appropriate inner member thereto, i.e., granules of soft iron 227 or spherical shaped member 279. However, it should be pointed out that either the inner member or the outer member or both may be magnets without departing from the spirit and scope of the present invention.

A fourth embodiment of the present invention is depicted in FIGS. 14 – 16 of the drawings and is character referenced therein by the numeral 311. The fourth embodiment 311 is somewhat similar to the principal embodiment 11 in that the tubular member 313 is substantially straight and has an indefinite length thereto. In fact, it is anticipated that the tubular member 313 may extend from one distant point to another, as for example, from one city to another for reasons yet to be disclosed. An inner member 315 is slidably received in the tubular member 313. Inner member 315 preferably is formed from a metal which is not permanently magnetized, e.g., a non-magnetized piece of steel or ferro-magnetic substance, but may be permanently magnetized, if desired, as heretofore explained relative to the other embodiments. The inner member 315 has a shape thereto substantially like that previously disclosed for the inner member 263 except the inner member 315 would have a cylindrical shape, i.e., straight sides rather than curved. Therefore, it would be redundant to describe in detail the shape of the inner member 315. Also, it will be understood that inner member 315 may be other shapes, e.g., like sphere 278, without departing from the spirit and scope of the present invention. Also, it will be understood that more than one inner member 315 (or sphere 278) may be provided with or without shafts 216 (or 216′), without departing from the spirit and scope of the present invention.

In order to have a complete understanding of the forces acting upon the inner member 315 (or 278), a complete understanding of tornadoes would be beneficial. A complete dissertation on tornadoes will not be attempted herein; however, a few important aspects thereof will be cited. First, tornadoes are formed under specific unstable atmospheric conditions involving layers of air with contrasting temperatures, moisture contents, densities, and wind flows. Secondly, complicated energy exchanges within these unstable air systems produce the vortex, which is the whirling funnel of rotating winds. Third, researchers seem to agree that tornadoes are caused by the combined effects of two kinds of forces, e.g., thermal or those involving the transfer of heat and mechanical or those involving rotating winds. Fourth, the exact process of tornado formation is still in doubt, but the following is generally accepted as factual:

A warm, moist surface air, having a natural tendency to rise, is prevented from rising by a mass of cold air pushing down on it. This sets up a condition of imbalance that is violently adjusted by a sudden breakthrough of the warm air at a particular location in the cold air mass. After this breakthrough, the warm lower air forces its way upward and the heavier cool air drops down, thus a rotary flow of air is created that may form into a tornado vortex. Wind currents spinning inward and upward create the vacuum at the eye or center. The violent whirling action of the wind's inward and upward movement is the main characteristic of a tornado.

Referring again to FIGS. 14 and 16 of the drawings, it may be seen that the fourth embodiment 311 includes a means 317 for introducing a non-stable turbulent mass of fluid into the tubular member 313 at least at one location along the length thereof to slidably move the inner member 315 (or 278) along the tubular

member 313. The means 317 includes a steam generator 319 which delivers steam under pressure through a conduit 321 to the interior of the inner member 315. From FIG. 14 of the drawings, it may be seen that the conduit 321 joins the tubular member 313 at an angle which causes the steam to be concentrated at a downstream point 323 within the tubular member 313. A conduit 325 also communicates the steam generator 319 with the tubular member 313. However, the steam from the steam generator 319 passes through a cooling section 327 which is clearly illustrated in FIGS. 15 and 16 of the drawings. Accordingly, the steam emanating from the steam generator 319 is drastically cooled and preferably has some of the moisture removed therefrom in a manner yet to be described. It should be noted that the cooling section 327 is connected to the tubular member 313 at a location substantially directly above the point 323, therefore setting up the two kinds of forces above-described. In other words, the hot steam adjacent the point 323 having a normal tendency to rise is prevented from doing so by the lid formed by the cooler drier fluid emanating from the cooling section 327. Therefore, a condition of imbalance is established or a non-stable turbulent mass of fluid is introduced into the tubular member 313 which creates a force for driving the inner member 315 (or 278) along.

From FIG. 14 of the drawings, it may be seen that at a predetermined distance downstream along the length of the tubular member 313 a second means 317 for introducing a non-stable turbulent mass of fluid is included, in other words, confining a tornado type situation within tube 313. Additional means 317 (not shown) may be included, depending upon the length of the tubular member 313. An object 329 may be placed adjacent the tubular member 313 and magnetically coupled to the inner member 315 and caused to move along adjacent the tubular member 313 in a manner similar to the previous embodiments. Thus, either the inner member of the outer member may be in the form of a magnet or both may be. It is anticipated that the object 329 might be a passenger conveying device, e.g., monorail structure or a vehicle similar to an automobile. Therefore, the object 329 may be moved from one city to another without conventional prime movers or the like.

The cooling section 327 includes a reduced diameter portion or venturi 331 which has a plurality of stublike tubular members 333 communicated therewith as clearly shown in the drawings. Accordingly, the reduction in pressure through the cooling section 327 will cause the steam to lose moisture and the tubular members 333 will admit cooler dry air which is carried on into the tubular member 313. If desired, cooling sections 327 may be omitted without departing from the spirit and scope of the present invention.

It should be understood that the inner member 315 (or 278) may optionally be an electro-magnet without departing from the spirit and scope of the invention. In other words, electrical structure well known to those skilled in the art could be installed within the tubular member 313 for keeping the inner members 315 (or 278) energized as it travels along the length of the tubular member 313. It should be understood that the inner member 315 travels from right to left, as viewed in FIG. 14 of the drawings.

Although the invention has been described and illustrated with respect to preferred embodiments thereof, it is to be understood that it is not to be so limited since changes and modifications may be made therein which are within the full intended scope of the invention.

I claim:

1. A conveying and force-producing means comprising tube means, at least one inner member movably mounted in said tube means, fluid means for causing fluid to be supplied to said tube means on one end of said inner member to move said inner member, at least one outer member disposed adjacent the exterior of said tube means at a location along the length thereof which is in the proximity of said inner member, magnetic means for magnetically coupling said outer member to said inner member to cause said outer member to move along with said inner member.

2. A conveying and force-producing means comprising tube means, an inner member slidably mounted in said tube means, fluid means for causing fluid to be supplied to said tube means on one end of said inner member to move said inner member, an outer member slidably mounted on the exterior of said tube means adjacent said inner member, magnetic means magnetically coupling said outer member to said inner member for moving said outer member.

3. The conveying and force-producing means of claim 1 in which said outer member includes magnet means, in which said inner member includes a magnetic substance, and in which said magnet means and said magnetic substance comprise said magnetic means.

4. The conveying and force-producing means of claim 1 in which said inner member includes magnet means, in which said outer member includes a magnetic substance, and in which said magnet means and said magnetic substance comprise said magnetic means.

5. The conveying and force-producing means of claim 2 in which said magnetic means includes an energized electro-magnetic means and in which is included means for de-energizing said electro-magnetic means.

6. The conveying and force-producing means of claim 1 in which said tube consists of a non-magnetic substance.

7. The conveying and force-producing means of claim 1 in which is included means for introducing a non-stable turbulent mass of fluid into said tube means at least at one location along the length thereof to move said inner member.

8. A rotary force-producing assembly comprising at least one endless tube, at least one inner member movably mounted in said tube means, fluid means for causing fluid to be supplied to said tube means to move said inner member around said endless tube, at least one outer member disposed adjacent the exterior of said tube in proximity to said inner member, magnetic means for magnetically coupling said outer member to said inner member to cause said outer member to move along with said inner member.

9. A rotary force-producing assembly including at least one unit comprising an endless tube, a plurality of spaced apart inner members constituting a first set of members and being received within said endless tube, at least one inlet conduit and at least one outlet conduit respectively communicated with said tube, means for forcing a fluid into said inlet conduit, said fluid travel-

ing through a portion of said endless tube and being exited through said outlet conduit to cause said first set of members to move along said endless tube, a journaled shaft, said endless tube being disposed circumjacent said shaft with the longitudinal axis of said endless tube being concentric to said shaft, a plurality of spaced apart outer members constituting a second set of members, said second set of members being fixedly attached to said shaft and being disposed adjacent the exterior of said tube at locations along the circumference thereof which respectively are in proximity to said first set of members, magnetic means for magnetically coupling said first and second sets of members together to cause said second set of members to move along with said first set of members which impart a rotary force to said shaft.

10. The assembly of claim 9 in which is included means for interconnecting said first set of members one to the other to establish a fixed interval therebetween, said interval corresponding to the spaced apart distance of said second set of members.

11. The assembly of claim 9 in which said inner members are each spherically shaped, and in which interconnecting means is included for interconnecting said first set of members one to the other to establish a fixed interval therebetween, said interconnecting means including ring means respectively movably coupled to said inner members to permit rolling movement of said inner members.

12. The assembly of claim 9 which includes means for coupling at least a plurality of said units one to the other, said plurality of units being arranged one behind another and being ganged to said journaled shaft to increase the force produced therewith.

13. The assembly of claim 9 in which said first set of members includes magnet means, in which said second set of members includes a magnetic substance, and in which said magnet means and said magnetic substance comprise said magnetic means respectively.

14. The assembly of claim 9 in which said second set of members includes magnet means, in which said first set of members includes a magnetic substance, and in which said magnet means and said magnetic substance comprise said magnetic means respectively.

15. The assembly of claim 14 in which said first set of members respectively comprises non-magnetic canisters for receiving granules of a magnetic substance.

16. The conveying and rotary force producing assembly of claim 9 in which said magnetic means includes of an energized electro-magnetic means and in which is included means for de-energizing said electromagnetic means.

17. The conveying and rotary force-producing assembly of claim 9 in which said inner members constitute elongated slugs having leading and trailing ends thereto, said leading ends being convex-shaped and said trailing ends being concave shaped, said elongated slugs having inner and outer sides thereto with said inner side being directed towards said journaled shaft and said outer side being remote therefrom, said convex end of said slugs having a non-regular radius curvature thereto with the radius gradually increasing from a point adjacent the longitudinal centerline thereof towards said outer side and the radius curvature gradually decreasing from said point adjacent the longitudinal centerline towards said inner side.

* * * * *

Newtype COMMUNICATIONS

445 Fifth Avenue
New York, New York 10016
Phone 212/686-5555
Fax 212/686-5414

STATE OF NEW YORK)
CITY OF NEW YORK :
COUNTY OF NEW YORK)

CERTIFICATION

This is to certify that the following is, to the best of our knowledge and belief, a true and accurate translation into ENGLISH of the attached document(s) relating to:

Transport device of a pneumatic dispatch type

written in German.

NEWTYPE COMMUNICATIONS, INC.

Sworn to and subscribed before me
this 2nd day of July, 1997.

NOTARY PUBLIC

MICHAEL A. PRESTIA
Notary Public, State of New York
No. 41-3157725
Qualified in Queens County
Commission Expires May 31, 1999

SA22081

[handwritten:] G 77 26 087.8

August 10, 1977
D 5578 - fual

DE-OS 27 37 924

Festo-Maschinenfabrik Gottlieb Stoll, 7300 Esslingen

Transport Device of a Pneumatic Dispatch Type

Claims

1. Transport device of a pneumatic dispatch type with a tube, in which a piston-like part can be moved back and forth between an initial position and specific intermediate and/or end positions, by means of a preferably pneumatic pressure medium, where the load to be transported is moved along with the part, characterized in that a carriage (21) is guided to move back and forth on the outside

circumference of the tube (12) made of non-magnetic material, and that the piston-like part (13) and the carriage (21) have an inside and an outside magnet (17, 27), respectively, which magnets cause a movement coupling of the two movable parts.

2. Device according to Claim 1, characterized in that the magnets (17, 27) are guided to be contact-free with regard to the tube wall.

3. Device according to Claim 1 or 2, characterized in that the inside or outside magnet (17, 27) is or they are structured as a closed magnet ring or a magnet ring (17, 27) slit on one side, where the magnet rings are coaxial to one another.

4. Device according to one of the preceding claims, characterized in that the carriage (21) is structured as a ring which is slit on one side, and possesses preferably three pairs of rollers (22, 23) uniformly distributed over the circumference.

5. Device according to Claim 4, characterized in that the carriage (21) is provided, on the top or the bottom, with a holder (21) [sic] for the load (28) to be transported.

6. Device according to Claim 4 or 5, characterized in that the carriage (21) is slit in a circumference region in which supports (14) engage with the tube (12).

7. Device according to one of the preceding claims, characterized in that the piston-like part (13) is provided on both ends with ring seals (18) which rest against the inner tube wall and have a radial action.

8. Device according to one of the preceding claims, characterized in that the magnets (17, 27) are structured as permanent magnets and/or adjustable electromagnets.

[handwritten:] G 77.26 087.8

August 10, 1977

D 5578 - fual

Festo-Maschinenfabrik Gottlieb Stoll, 7300 Esslingen

Transport Device of a Pneumatic Dispatch Type

The invention relates to a transport device of a pneumatic dispatch type with a tube, in which a piston-like part can be moved back and forth between an initial position and specific intermediate and/or end positions, by means of a preferably pneumatic pressure medium, where the load to be transported is moved along with the part.

In the known so-called pneumatic dispatch devices, sleeves which can be closed are provided, into which the object to be transported is inserted, and which are then transported to a different end

position by means of a pneumatic pressure medium. These devices have the disadvantage that the objects to be transported are very limited in terms of volume. Furthermore, opening and closing of the transport aid is relatively time-consuming and complicated. Such pneumatic dispatch devices are therefore only used for transport of papers, etc., over relatively long distances within a building. For short distances and for transport of heavier and larger loads, for example for in-house transport from one job site to another, devices are known which are driven, for example, by means of a pneumatic cylinder or by means of a chain, via a drive motor. However, pneumatic cylinders have the disadvantage that they can be efficiently used only to a lifting height of about 2 meters. Chain drives and similar devices have the disadvantage that they are very noisy in operation.

It is a task of the present invention to create a transport device of a pneumatic dispatch type, of the type indicated initially, with which relatively large objects can be transported back and forth without any problems, for example for purposes of in-house work sequences.

To accomplish this task, it is provided, according to the invention, that a carriage is guided to move back and forth on the outside circumference of the tube made of non-magnetic material, and that the piston-like part and the carriage have an inside and an outside magnet, respectively, which magnets cause a movement coupling of the two movable parts.

The device according to the invention can therefore possess a similarly uncomplicated structure as that of a pneumatic dispatch device, but is practically unlimited with regard to the objects and loads to be transported. The device according to the invention can be used, for example, for in-house transport from one job site to another, for example in the form of a slanted elevator or in another manner. Furthermore, it produces little noise and presents itself as a closed system, in contrast to the known pneumatic dispatch system, in terms of the pneumatic drive medium, so that it can have a very simple structure and there are no sealing problems.

Further details and forms of the invention are contained in the following description, in which the invention is described and explained in greater detail on the basis of the exemplary embodiment shown in the drawing. This shows:

Fig. 1 a crosswise cross-section through the transport device according to an exemplary embodiment of the present invention, and

Fig. 2 a lengthwise cross-section through the transport device according to Fig. 1.

[Translator's Note: The above description of the figures does not match the figures themselves; Fig. 1 shows a lengthwise cross-section, Fig. 2 a crosswise cross-section.]

The transport device 11 of a pneumatic dispatch type according to the invention possesses a tube 12 made of a non-magnetic material, within which a piston-like part 13 can be moved back and forth in the direction of the arrow A, under the effect of a hydraulic or pneumatic pressure medium, preferably compressed air. The guide tube 12, which can possess a relatively small inside diameter of about 25 mm, can have almost any desired type of path. For example, it can be guided and structured along a straight stretch, along a loop, level, inclined, or in any other manner. In the case of longer distances, it is practical to support the guide tube 12 at a constant distance with a support 14, as is evident from Fig. 2.

The piston-like part 13 possesses a core 16 made of non-magnetic material, around which a magnet ring 17 is arranged. On both face ends of the magnet ring 17, the core 16 is surrounded by ring seals 18 which have a radial effect, and which rest against the inside wall of the tube 12, forming a seal, and at the same time serve to guide the part 13. In this connection, the arrangement of the individual elements of the part 13 is determined in such a way that the magnet ring 17 possesses a slight ring gap relative to the inside wall of the tube 12, in other words is held inside the guide tube 12 in contact-free manner. The core 16 forms the engagement surface for the preferably pneumatic pressure medium on its two faces 19.

On the outside circumference side, the guide tube 12 is surrounded by a carriage 21, which has the shape of a slit ring and is also made from non-magnetic material. The carriage 21 possesses a front and rear roller 22, 23, which act as transport and guide rollers, with which the carriage 21 can easily be moved along the length of the tube 12. The rollers 22, 23 are directed radially, with their axes of rotation 24 being arranged crosswise to the direction of movement. In the circumference region of the supports 14 which engage with the tube 12, the carriage 21 is provided with a slit 26, which preferably runs at a slant downward, preferably at an acute angle to the perpendicular. On the inside circumference side, an outside magnet ring 27 is held on the carriage 21, which ring is arranged coaxial to the inside magnet ring 17 and represents a counter-magnet to the latter. The outside magnet ring 27 is also held in such a way that its inside circumference forms a gap with the outside circumference of the tube 12, so that it is held in contact-free manner with regard to the tube 12. In the exemplary embodiment shown, the load 28 is held, i.e. attached by means of a suitable holder device 29, hanging down from the carriage 21. It is understood that a corresponding holder device can also be provided on the top, the side, or any other part of the circumference of the carriage 21. It is also possible to affix one or two holder devices on the face(s) of the carriage.

The two magnet rings 17 and 27 are attuned to one another in such a way that practically rigid coupling of the carriage 21 with the pneumatically driven part 23 [sic] is obtained, so that the carriage 21 is moved back and forth synchronous with the drive of the inside part 13, for example by means of compressed air. The inside and/or outside magnets 17, 27 can be structured as permanent magnets or also as electromagnets with an adjustable force. It is also possible to combine permanent magnets and electromagnets with one another in such a way that the basic load is taken over by the permanent magnet, while electromagnets can be added or removed as desired for other cases.

It is understood that it is also possible to give the magnets 17 and 27 a different shape. For example, it is possible to provide several magnets arranged to be distributed over the circumference, instead of a ring. It is furthermore also possible to give the carriage 21 a different shape, for example to suspend it from the tube in the manner of a gallows.

It is furthermore understood that the guide tube 12 is structured as a closed system, which is provided with inlet and outlet openings for the pressure medium at both ends. It is also possible, depending on the length of the guide tube, to provide inlets and outlets for the pressure medium, which can be opened and shut, at intermediate stations.

[1 page of drawings, Fig. 1 and 2]

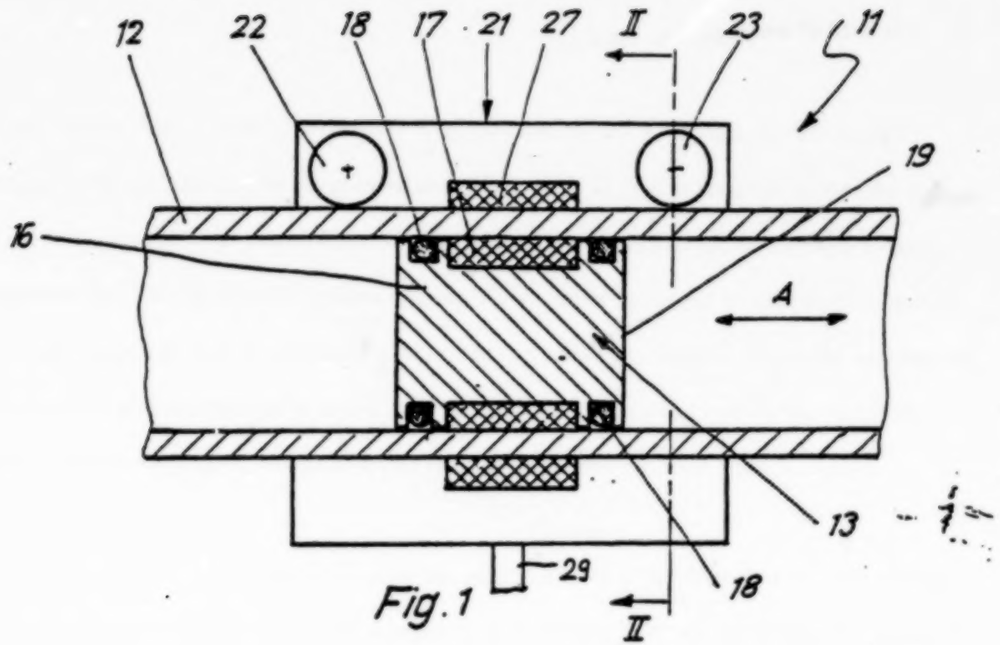

Fig. 1

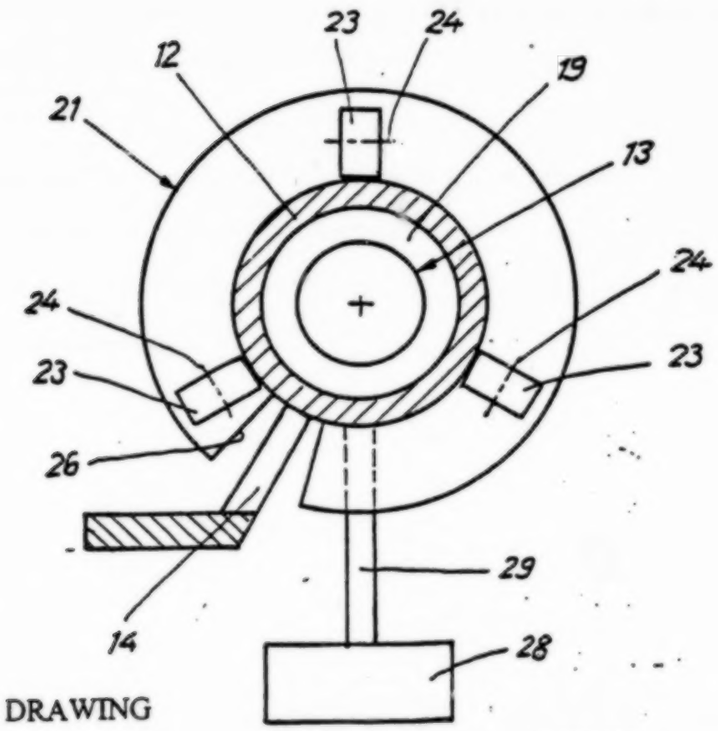

ORIGINAL SIZE DRAWING

SA22102

Fig. 2

PLAINTIFF'S EXHIBIT 17
ALLSTATE LEGAL SUPPLY CO.

U. S DEPARTMENT OF COMMERCE
United States Patent and Trademark Office

January 31, 1992
(Date)

THIS IS TO CERTIFY that the annexed is a true copy from the records of this office

of U.S. Patent 3,779,401.

By authority of the
COMMISSIONER OF PATENTS AND TRADEMARKS

Certifying Officer.

United States Patent [19]

Carroll

[11] **3,779,401**

[45] **Dec. 18, 1973**

[54] **PNEUMATIC DEVICE FOR MOVING ARTICLES**

[76] Inventor: **George Carroll**, 12 Palmerston, Stockport, England

[22] Filed: **Feb. 17, 1972**

[21] Appl. No.: **227,570**

[30] **Foreign Application Priority Data**

Feb. 18, 1971 Great Britain 4,890/71

[52] U.S. Cl. ..... 214/1 BB, 91/DIG. 4, 92/169

[51] Int. Cl. F01b 11/00

[58] Field of Search ..... 214/1 BB, 1 BT; 294/65.5; 91/DIG. 4; 92/169, 170

[56] **References Cited**

UNITED STATES PATENTS

3,390,580	7/1968	Taylor	92/5 R X
2,446,657	8/1948	McLeod	91/DIG. 4
2,996,330	8/1961	Hutto	214/1 CM
3,168,203	2/1965	Gallistel	214/1 CM

Primary Examiner—Gerald M. Forlenza
Assistant Examiner—George F. Abraham
Attorney—Francis C. Browne et al.

[57] **ABSTRACT**

A device for moving articles comprising a cylinder of non-ferrous material, a piston including a magnet movable within said cylinder, means for controlling the admission of pressure fluid to the cylinder for moving said piston and a body disposed outside and adjacent to said cylinder, said body including a magnet, the arrangement being such that movement of said piston causes a corresponding movement of said body.

8 Claims, 6 Drawing Figures

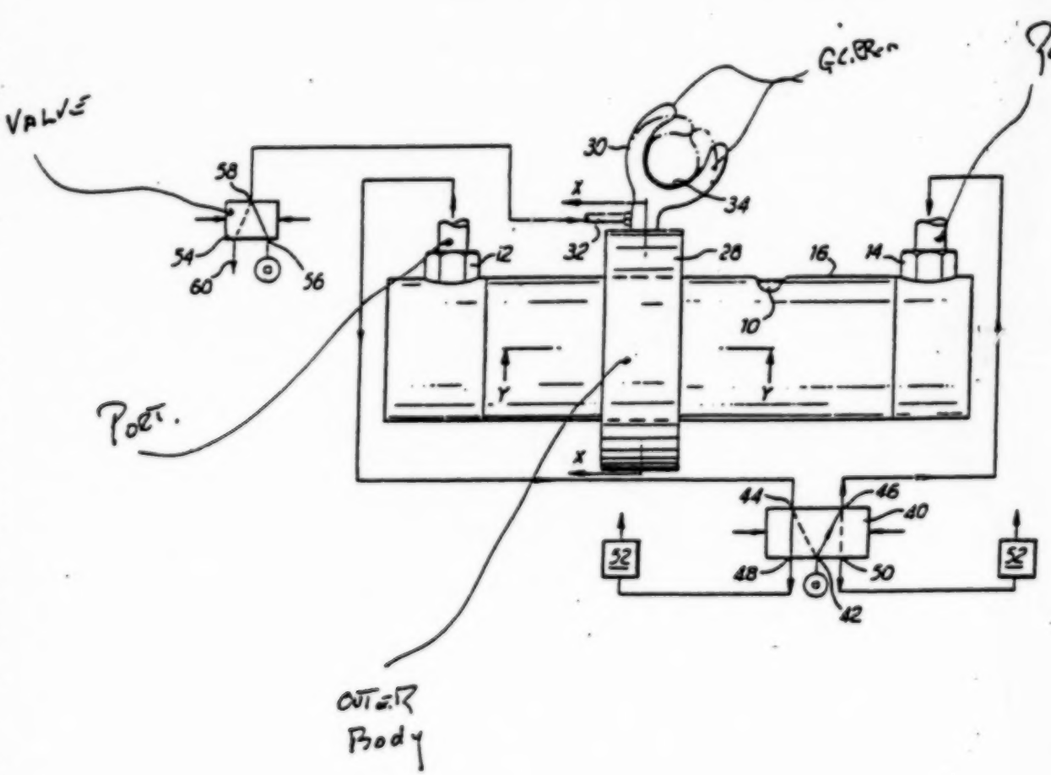

FIG. 1

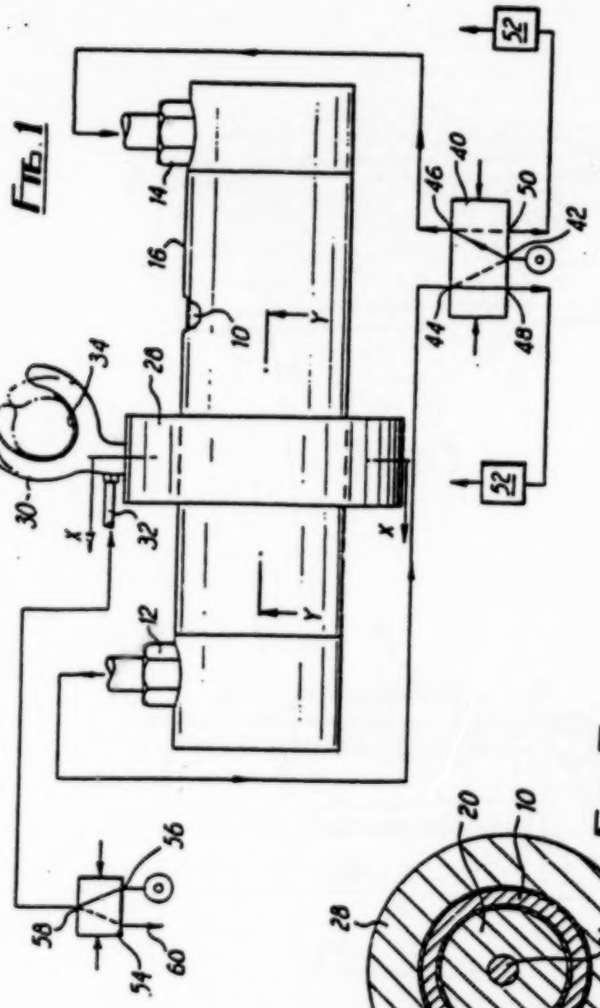

FIG. 2

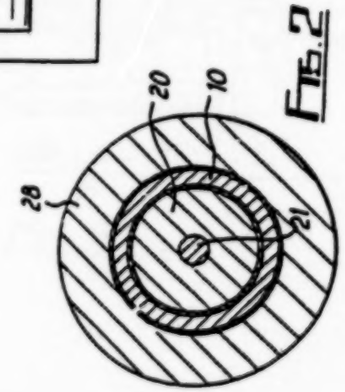

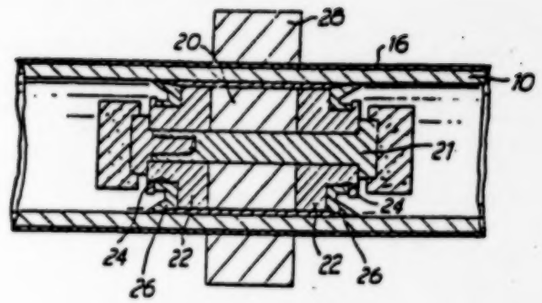

FIG. 3

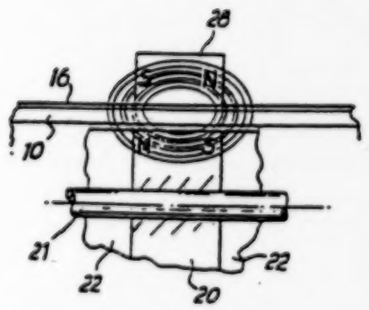

FIG. 4

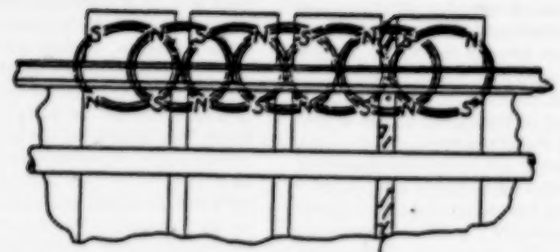

FIG. 5

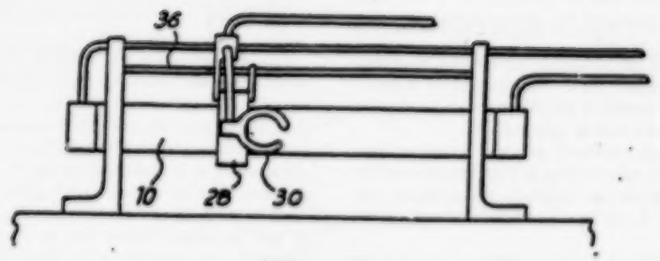

FIG. 6

PNEUMATIC DEVICE FOR MOVING ARTICLES

This invention relates to a magnetic device for moving articles and in particular for moving articles of clothing.

It has previously been proposed to provide pneumatic devices which include a cylinder and a piston mounted on a piston rod working in said cylinder. Such devices suffer from the disadvantage that considerable space is required to accommodate the piston rod. Such a distance being up to twice the distance through which an article may be moved by the device.

Further, in the clothing industry in particular, very light loads are required to be moved preferably at high speeds or at both high speeds and slower speeds during transfer of an article from one site to . nother. Devices as previously proposed cannot operate in accordance with these requirements.

The present invention has been made from a consideration of the aforesaid disadvantages.

According to the invention there is provided a device for moving articles comprising a cylinder of non-ferrous material, a piston including a magnet movable within said cylinder, means for controlling the admission of pressure fluid to the cylinder for moving said piston and a body disposed outside and adjacent to said cylinder, said body including a magnet, the arrangement being such that movement of said piston causes a corresponding movement of said body.

In a preferred embodiment of the invention the body comprises an annular magnet surrounding the cylinder having means mounted thereon for holding or supporting an article. Inlets for pressure fluid are preferably provided at each end of the cylinder and the input and/or exhaust of pressure fluid to the cylinder is preferably controlled by a valve. Means may also be provided for adjusting the conditions of pressure fluid within the cylinder so that the piston movement can be halted during travel from one end of the cylinder to the other and/or so that the speed of the piston during travel of the cylinder can be varied.

The pressure fluid employed in the present invention is preferably compressed air so that the device is pneumatic. It is however possible for the pressure fluid to be a liquid so that the device is hydraulic.

The invention is particularly adapted to move light loads such as articles of clothing at high speeds and for this purpose the means for holding or supporting the article is preferably a resilient pneumatically operable gripping device.

A specific embodiment of the invention will now be described by way of example with reference to the accompanying drawings in which:

FIG. 1 shows the device and associated control means schematically;

FIG. 2 is a section on the line X—X of FIG. 1;

FIG. 3 is a section on the line Y—Y of FIG. 2.

FIG. 4 shows the magnetic field using a single magnet;

FIG. 5 shows the magnetic field where a plurality of magnets are employed; and

FIG. 6 shows the device in plan view.

Referring to the drawings the device comprises a cylinder 10 of non-ferrous material having parts 12 and 14 adjacent each end. A coating 16 of material having a low coefficient of friction, such as polytetrafluoroethylene, is formed on both outer and inner surfaces of said cylinder. A piston 18 is located in the cylinder, the piston comprising a cylindrical permanent magnet 20, having a diameter less than the internal diameter of the cylinder 10, clamped between two non-ferrous piston end members 22, of substantially cylindrical shape but of overall diameter less than the internal diameter of the cylinder. The magnet 20 and piston end members are held together by means of a bolt 21 passing through a bore in the magnet and end members.

Each end member has an annular groove 24 thereround which accommodates a resilient sealing ring 26 adapted to engage the inner wall of the cylinder and form a fluid tight seal. Cushions of resilient material are fixed to each end member, or as shown in FIG. 2 to the head of the bolt 21 to prevent damage to the device when the piston reaches the ends of the cylinder.

A permanent magnet 28 of annular shape surrounds the cylinder with minimum clearance, the polarisation of magnets 20 and 28 being such that movement of the piston, and hence magnet 20 within the cylinder causes corresponding movement of magnet 28 outside the cylinder (see FIG.4). piston, and hence magnet 20 within the cylinder causes corresponding movement of magnet 28 outside the cylinder (see FIG.4).

A pneumatically operable article gripping device 30 is mounted on magnet 28. The gripper device 30 comprises a hollow substantially U-shaped body of resilient material, such as rubber, having an inlet 32 for pressure fluid. The U-shaped body is held in shape by means of light porous reinforcing material therewithin. A strip of material 34 is bonded to the body between the arms thereof, said material being material of less elasticity than that of the body so that when pressure fluid is admitted through inlet 32 the arms of the U-shaped body will bend inwards towards each other (as shown in dotted lines in FIG.1) and will grip any article therebetween. In order to prevent the magnet 28 rotating relative to the cylinder a guide rod 36 (FIG.6) is mounted outside the cylinder and axially parallel thereto, a tie bar 38 being fixed to the magnet and having a hole bore therein which runs freely on the guide rod.

The device is controllable by means of a five part spool valve 40 which has a port 42 connected to a supply of compressed air (not shown), port 44 connected to cylinder port 12, port 46 connected to cylinder port 14 and exhaust ports 48 and 50. As shown in FIG. 1 the spool valve is in position to supply compressed air to cylinder port 14 and cylinder port 12 is connected to exhaust port 48 so that the piston, and with it magnet 28 and gripping device 30, is moved to the left (as viewed in the drawing). On reversing the spool valve compressed air will be supplied to cylinder port 12 and cylinder port 14 will be connected to exhaust port 50 so that the piston moves towards the right. The exhaust ports of valve 40 are preferably connected to variable restrictor mechanisms 52 which are automatically operable to control the exhaust from the valve 40 and hence the speed of the piston in the cylinder.

The supply and exhaust of pressure air to the gripping device 30 is controlled by a spool valve 54 having a port 56 connected to a compressed air supply (not shown), a port 58 connected to inlet 32 and an exhaust port 60. The movement of the magnet 28 along the cylinder can be used to generate signals for operating the valve 54 and if desired the restrictor mechanisms 52 and valve 40.

As illustrated in FIG. 5 more than one magnet may be provided on the piston and/or around the cylinder.

It is, however, preferred to arrange that the magnetic force between the magnets should not be greatly in excess of that required to move the articles required to be transported. Thus should magnet 28 be obstructed by a person or by some object the piston can still move to the end of the cylinder without any damage to the device and without injury to the person or object.

The device according to the invention is capable of high speed operation, the speed of travel of the piston in the cylinder being a function of the volume of air admitted through the inlet port and exhausted through the exhaust port, this itself being a function of the size of the ports. By appropriate dimensioning of the ports it has been possible without difficulty to move a piston from one end of a 20 foot cylinder to the other end thereof in about 7 seconds.

The device may be used not only for the transfer of articles of clothing, but may be used to carry any article from one site to another along a predetermined path. Thus while the specific embodiment describes an arrangement suitable for transferring an article along a linear path, it is possible to shape the guide rod for example in the form of a helix so that the body will follow a helical path.

In the embodiment described with reference to the drawings a polytetra fluoroethylene coating is applied to the outer surface of the cylinder to provide a low friction surface upon which the body may run. As an alternative it is possible to provide an air bearing between the body and the cylinder. Further it is possible to use the repulsive force of magnets located in longitudinal grooves in the surface of the cylinder and further magnets disposed in the body which maintain the body spaced - apart from said cylinder.

If the device is designed for operation at high speeds, it may be found that the piston is decelerated too abruptly on reaching the end of the cylinder. Better control over deceleration of the piston may be accomplished by coupling the port which is exhausting to a chamber or cylinder containing a non-compressible fluid such as water.

The operation of the device may be triggered by any suitable means such as a timing device and/or a device sensitive to the presence, at one end of the device, of an article to be transferred thereby.

What is claimed is:

1. A device for moving articles comprising a cylinder of non-ferrous material, a piston including a permanent magnet having a pole-piece on each axial side thereof, a body disposed outside and adjacent to said cylinder, said body including a permanent magnet which substantially surrounds the cylinder, there being a pole piece on each axial side of the permanent magnet included in said body, and means for controlling the admission of pressure fluid into the cylinder and exhaust of fluid from the cylinder for moving the piston in the cylinder, the attractive forces between the permanent magnets being such that movement of the piston causes corresponding movement of the body below a predetermined load on the body and such that above said predetermined load movement of the piston does not cause corresponding movement of the body.

2. A device as claimed in claim 1, wherein the body comprises an annular magnet surrounding the cylinder and means for holding or supporting an article.

3. A device as claimed in claim 2, wherein the means in said body for holding an article comprises a pneumatically operable gripping means.

4. A device as claimed in claim 3, wherein at least a part of the gripping means is adapted to grip an article and is made of resilient material.

5. A device as claimed in claim 1 wherein a port is provided at each end of the cylinder for the input of pressure fluid to, and exhaust of pressure fluid, from the cylinder.

6. A device as claimed in claim 5, wherein a valve is provided for controlling the input of pressure fluid and the exhaust of pressure fluid from the cylinder to thereby control the movement of the piston in the cylinder.

7. A device as claimed in claim 1 in which said body including the permanent magnet surrounds the cylinder.

8. A device as claimed in claim 1 in which the piston includes a plurality of permanent magnets.

* * * * *

01-435
02/3,779,401.PS

(12-80)

U. S DEPARTMENT OF COMMERCE
United States Patent and Trademark Office

PLAINTIFF'S EXHIBIT 19
ALL-STATE LEGAL SUPPLY CO.

January 31, 1992
(Date)

THIS IS TO CERTIFY that the annexed is a true copy from the records of this office

of the Reexamination Certificate Number B1 3,779,401.

By authority of the
COMMISSIONER OF PATENTS AND TRADEMARKS

Certifying Officer.

REEXAMINATION CERTIFICATE (935th)

United States Patent [19]

Carroll

[11] **B1 3,779,401**

[45] Certificate Issued **Oct. 25, 1988**

[54] **PNEUMATIC DEVICE FOR MOVING ARTICLES**

[75] Inventor: **George Carroll**, Stockport, England

[73] Assignee: **Festo KG**, Esslingen-Berkheim, Fed. Rep. of Germany

Reexamination Request:
No. 90/001,477, Mar. 18, 1988

Reexamination Certificate for:

Patent No.:	3,779,401
Issued:	Dec. 18, 1973
Appl. No.:	227,570
Filed:	Feb. 17, 1972

[30] **Foreign Application Priority Data**

Feb. 18, 1971 [GB] United Kingdom 4890/71

[51] Int. Cl.[4] **F01B 11/00**

[52] U.S. Cl. 414/751; 91/DIG. 4; 92/169; 198/619

[58] Field of Search ..... 414/3, 749, 751; 91/DIG. 4; 92/85 R, 169, 170; 198/619; 104/154, 156

[56] **References Cited**

U.S. PATENT DOCUMENTS

1,162,562	11/1915	Brown	92/85 R
2,446,657	8/1948	MacLeod et al.	91/DIG. 4
2,996,330	8/1961	Hutto	414/751 X
3,168,203	2/1965	Gallistel	414/3
3,390,580	7/1968	Taylor	92/5 R X
4,488,477	12/1984	Miyamoto	91/DIG. 4

FOREIGN PATENT DOCUMENTS

1982379 3/1968 Fed. Rep. of Germany .

Primary Examiner—L. J. Paperner

[57] **ABSTRACT**

A device for moving articles comprising a cylinder of non-ferrous material, a piston including a magnet movable within said cylinder, means for controlling the admission of pressure fluid to the cylinder for moving said piston and a body disposed outside and adjacent to said cylinder, said body including a magnet, the arrangement being such that movement of said piston causes a corresponding movement of said body.

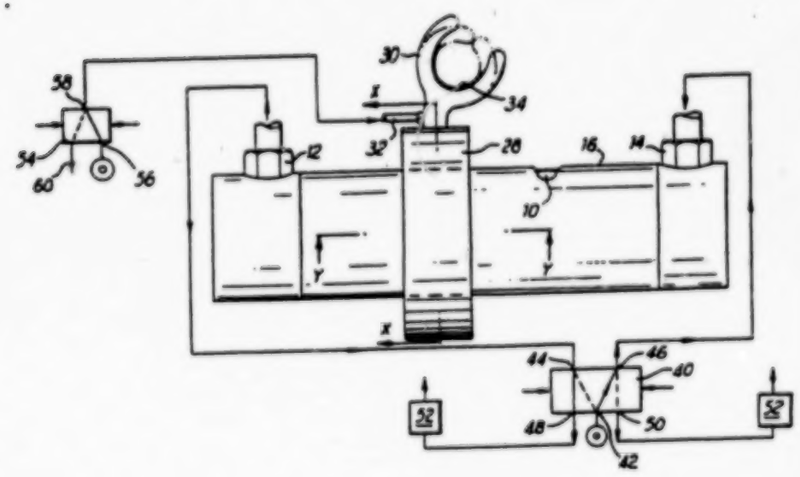

REEXAMINATION CERTIFICATE ISSUED UNDER 35 U.S.C. 307

THE PATENT IS HEREBY AMENDED AS INDICATED BELOW.

Matter enclosed in heavy brackets [ ] appeared in the patent, but has been deleted and is no longer a part of the patent; matter printed in italics indicates additions made to the patent.

AS A RESULT OF REEXAMINATION, IT HAS BEEN DETERMINED THAT:

Claims 1, 2, 7 and 8 are cancelled.

Claims 3 and 5 are determined to be patentable as amended.

Claims 4 and 6, dependent on an amended claim, are determined to be patentable.

New claim 9 is added and determined to be patentable.

3. A device as claimed in claim [2] *9* wherein the means [in] *on* said body for holding an article comprises a pneumatically operable gripping means.

5. A device as claimed in claim [1] *9* wherein a port is provided at each end of the cylinder for the input of pressure fluid to, and exhaust of pressure fluid, from the cylinder.

9. A device for moving articles, which comprises:

a hollow cylinder formed of non-ferrous material and having opposite axial ends;

a piston mounted in the interior of the hollow cylinder and reciprocatingly slidable therein, the piston including a central mounting member disposed axially in the cylinder, a plurality of cylindrically-shaped permanent magnets mounted on the central mounting member and spaced apart axially from each other, each magnet having a bore formed axially therethrough for receiving the central mounting member, at least one pair of end members mounted on the central mounting member and disposed on opposite axial sides of the plurality of magnets, a pair of cushion members formed of resilient material, the cushion members being situated near opposite axial ends of the central mounting member to help prevent damage to the piston when the piston contacts an axial end of the cylinder, and a pair of resilient sealing rings situated near opposite axial ends of the central mounting member and engaging the cylinder to effect a fluid-tight seal therewith;

a body mounted on the exterior of the hollow cylinder and reciprocatingly slidable thereon, the body including a plurality of annularly shaped permanent magnets surrounding the cylinder and spaced apart from each other, the permanent magnets of the piston and body being polarized so as to magnetically couple the body to the piston whereby movement of the piston inside the cylinder causes a corresponding movement of the body outside the cylinder, the body further including means provided thereon for holding on the body an article to be moved; and

means for controlling the admission of pressure fluid into the cylinder and exhaust fluid from the cylinder for moving the piston in the cylinder, the attractive forces between the permanent magnets of the piston and the body being such that movement of the piston causes corresponding movement of the body below a predetermined load on the body and such that above said predetermined load movement of the piston does not cause corresponding movement of the body.

* * * * *

PLAINTIFF'S EXHIBIT 18

[redacted] 1508 (8-83)

RE[redacted]MINATION

3779401

CONT[redacted] NUMBER	CERTIFICATE DATE	CERTIFICATE NUMBER
9[redacted]01477	OCT 25 1988	B1-3,779,401

SERIA[redacted]R	FILING DATE	CLASS	SUBCLASS	GROUP ART UNIT	EXAMINER
90[redacted]477	03/13/88	414	751	317	[illegible]

APPLICANTS

OW[redacted]F PAT NO 3779401,,, FESTO K.G., ESSLINGEN, FED REP GERMANY.

[redacted]UING DATA********
V[redacted]D THIS APPLN IS A REX OF 05/227,570 02/17/72 PAT 3,779,401

F[redacted]/PCT APPLICATIONS********
VE[redacted] UNITED KINGDOM 4890 02/13/71

FORE[redacted]ING LICENSE GRANTED 03/10/88

Foreign prio[redacted] 35 USC 119 [redacted] Verified and [redacted]	☒yes ☐no ☒yes ☐no Examiner's Initials	AS FILED	STATE OR COUNTRY	SHEETS DRWGS.	TOTAL CLAIMS	INDEP. CLAIMS	FILING FEE RECEIVED	ATTORNEY'S DOCKET NO.
				0	10	1	$1,770.00	

ADDRESS
GER[redacted]HODNER
HOF[redacted]HARON
350[redacted] TURNPIKE
JER[redacted] 11755

TITLE
PNE[redacted]EVICE FOR MOVING ARTICLES

This is to certify that annexed hereto is a true copy from the records of the United States Patent and Trademark Office of the File Wrapper and Contents of the file identified above.

By authority of the
COMMISSIONER OF PATENTS AND TRADEMARKS

M. Lee
Certifying Officer

Da[redacted]N 31 1992

01-438
B1-3,779,401 PS

608 (8-83)

AMINATION

3779401

NUMBER	CERTIFICATE DATE	CERTIFICATE NUMBER
90001477	OCT 25 1988	B1-3,779,401

SERIAL NUMBER	FILING DATE	CLASS	SUBCLASS	GROUP ART UNIT	EXAMINER
90/001,477	03/13/88	414	751	317	[illegible]

APPLICANTS

OWNER OF PAT NO 3779401,,, FESTO K.G., ESSLINGEN, FED REP GERMANY.

CONTINUING DATA********

VERIFIED THIS APPLN IS A REX OF 05/227,570 02/17/72 PAT 3,779,401

OK W

FOREIGN/PCT APPLICATIONS********

VERIFIED UNITED KINGDOM 4890 02/18/71

OK W

FOREIGN FILING LICENSE GRANTED 03/10/88

Foreign priority claimed 35 USC 119 conditions met / Verified and Acknowledged	AS FILED	STATE OR COUNTRY	SHEETS DRWGS.	TOTAL CLAIMS	INDEP. CLAIMS	FILING FEE RECEIVED	ATTORNEY'S DOCKET NO.
☒ yes ☐ no / ☒ yes ☐ no / Examiner's Initials			0	10	1	$1,770.00	

ADDRESS

GERALD T. HODNER
HOFFMAN & BARON
350 JERICHO TURNPIKE
JERICHO, NY 11753

TITLE

PNEUMATIC DEVICE FOR MOVING ARTICLES

U.S. DEPT. of COMM.-Pat. & TM Office — PTO-436L (rev. 10-78)

REQUESTER CORRESPONDENCE ADDRESS: PATENT OWNER ☒ THIRD PARTY ☐

SAME AS ABOVE

COPENDING OFFICE PROCEEDINGS		PREPARED FOR CERTIFICATE
TYPE OF PROCEEDING	NUMBER	A. Tabai 8/25/88 (Docket Clerk)
1		REEXAMINED AND PASSED FOR CERTIFICATE
2		L. J. Paperner [illegible] 317 (Primary Examiner) (Group)
3		

477

CONTENTS

Entered		REQUEST PAPERS FILED
4-15-88	2	Title Report
4-13-88	3	Notice of Reexam Filing Date
4-14-88	4	Notice of Assigned Group
	5	REXO (2 nos) May 25, 1988
8/8	6	[illegible] 1988
	7	NIRC Aug. 25 1988
	8	Title Report 11/12/88
	9	
	10	
	11	
	12	
	13	
	14	
	15	
	16	
	17	
	18	
	19	
	20	
	21	
	22	
	23	
	24	
	25	
	26	
	27	
	28	
	29	
	30	
	31	
	32	
	33	64

SEARCH NOTES

	Date	Ex'r
Class 92 (Looker) Class 198 (Valenza)	8/20/88	

...ATION
...NUMBER
...001477
SERIAL NUMBER
90/001,477
APPLICANTS
OWNER

CLAIM NO.
FOR O.G. 9

DRAWING FIG.
FOR CERTIFICATE AND
FOR O.G. 1

LITIGATION REVIEW JB (exmr. init.) 5/17/88 (date)

CASE NAME	DIRECTOR INITIALS

REEXAMINATION FIELD OF SEARCH

Class	Sub	Date	Ex'r
414	3		
	749		
	751	8/22/88	JB
91	Dig 4		
92	85R		
	169		
	170		
198	619		
104	154		
	156		

INDEX OF CLAIMS

Claim Final	Claim Original	Date	Claim Final	Claim Original	Date
	1			26	
	2			27	
3	3	=		28	
4	4	=		29	
5	5	=		30	
6	6	=		31	
	7			32	
	8			33	
9	9	=		34	
	10			35	
	11			36	
	12			37	
	13			38	
	14			39	
	15			40	
	16			41	
	17			42	
	18			43	
	19			44	
	20			45	
	21			46	
	22			47	
	23			48	
	24			49	
	25			50	

SYMBOLS — STATUS
✓ ..... Rejected
— ..... Patentable
— ..... (Through numeral) Canceled
A ..... Appeal
O ..... Objected
D ..... Disclaimed/Dedicated
63

RECEIVE

MAR 18 1988

APPLICATION BRANCH

IN THE UNITED STATES PATENT AND TRADEMARK OFFICE

90001477

Patent: U.S. Pat. No. 3,779,401

Date of Issue: Dec. 18, 1973

Name of Patentee: George Carroll

Title of Invention: Pneumatic Device For Moving Articles

Commissioner of Patents and Trademarks

Box REEXAM

Washington, D.C. 20231

REEXAMINATION REQUEST

Reexamination is requested pursuant to 37 CFR 1.510 in respect of the above-identified patent.

PRIOR PATENTS AND PUBLICATIONS

The prior patents and publications which are cited on the attached Form PTO-1449 are attached:

[x] An English translation of the necessary portions and pertinent parts of the non-English prior patents and publications is attached.

IDENTIFICATION OF CLAIMS FOR WHICH REEXAMINATION IS REQUESTED

The claims of the above identified patent for which reexamination is requested are claims 1-8

STATEMENT OF NEW QUESTION OF PATENTABILITY

The substantial new question of patentability raised by the above prior art is set forth in the attached STATEMENT OF NEW QUESTIONS OF PATENTABILITY (37 CFR 1.510(b)(1)).

DETAILED EXPLANATION OF PERTINENCY OF PRIOR ART

[x] The pertinency of the cited prior art to the claims for which reexamination is requested is set forth in the attached DETAILED EXPLANATION OF PERTINENCY OF PRIOR ART (37 CFR 1.510(b)(2)).

[ ] The person requesting reexamination is the patent owner and submits that the patent claims distinguish over the cited prior art as set forth in the attached DETAILED EXPLANATION OF PERTINENCY OF PRIOR ART.

[ ] The person requesting examination is the patent owner and submits herewith a PROPOSED AMENDMENT in the form of a full copy of the text of:

[ ] (1) each claim, and

[ ] (2) each paragraph

which is amended in which the matter proposed to be deleted is placed between brackets and matter proposed to be added is underlined.

NOTE: This can only be done where the patent owner is the requester. 37 CFR 1.510 (e).

050 03/30/88 001477 1 147 1,770.00 CK

(Reexamination Request [18-1]—page 1 of 3)

CUT-UP COPY OF PATENT

Submitted herewith is a cut-up copy of the original patent showing single columns of the patent mounted or reproduced on one side of a separate paper (37 CFR 1.510(b)(4)).

CONCURRENT OR PRIOR PROCEEDINGS

Also included is a copy of

- ☐ a disclaimer for this patent
- ☐ certificate of correction for this patent
- ☐ reexamination certificate previously issued for this patent

and/or

- ☐ concurrently there is pending for this patent proceedings as set forth on the attached STATEMENT OF CONCURRENT PROCEEDINGS.

REQUEST BEING FILED TO DISSOLVE PENDING INTERFERENCE

- ☐ This reexamination request is being filed as part of a motion under 37 CFR 1.231(a)(1)

CERTIFICATION OF SERVICE

The signature below certifies that:

- ☐ A copy of this request and all accompanying papers has been served on the patent owner at the address provided for in 37 CFR 1.33(c) by depositing the documents in an envelope bearing first class postage in an official U.S. Postal Service repository at the date set forth below addressed as follows:

  Name _____

  Address _____

  _____

- ☐ Service was not possible and a duplicate copy of all papers is hereby submitted to the Office.

FEE

- ☒ A check in the amount of $1,770.00 is attached.
- ☐ Please charge my Deposit Account No. _____ in the amount of $1,770.00. A duplicate of this request is attached.

Any refund should be made by

- ☒ check
- ☐ credit to Deposit Account No. _____

IDENTIFICATION OF PERSON MAKING THIS REQUEST

The name and address of the person making this request is

Name HOFFMANN & BARON

Address 350 Jericho Turnpike

Jericho, New York 11753

Tel. No. (516) 822-3550

ADDRESS OF CORRESPONDENCE

Please address all correspondence as follows

Name Gerald T. Bodner, c/o HOFFMANN & BARON

Address 350 Jericho Turnpike

Jericho, NY 11753

Gerald T. Bodner

Signature

Gerald T. Bodner

(Type or print name of party signing and title, if applicable)

(when attorney signs add)

Reg. No. 30,449

Tel. No. (516) 822-3550

- ☐ Patent Owner
- ☐ Third Party Requester
- ☒ Attorney for Patent Owner
- ☐ Attorney for Requester

NOTE: The attorney must have a power of attorney or be acting in a representative capacity pursuant to 37 CFR 1.34(a). 37 CFR 1.510(f).

MAR 18 1988

APPLICATION BRANCH

90001477

IN THE UNITED STATES PATENT AND TRADEMARK OFFICE

Patent: U.S. Patent No. 3,779,401 Docket No.: 163-5

Date of Issue: December 18, 1973 Dated: March 18, 1988

Name of Patentee: George Carroll

Title of Invention: PNEUMATIC DEVICE FOR MOVING ARTICLES

Commissioner of Patents
and Trademarks
Box REEXAM
Washington, D.C. 20231

STATEMENT ACCOMPANYING REQUEST FOR REEXAMINATION

Sir:

Reexamination under 35 U.S.C. 302-307 and 37 C.F.R. 1.510 is respectfully requested by the patent owner of United States Patent No. 3,779,401, which issued on December 18, 1973 to George Carroll. This patent is still enforceable.

CLAIMS FOR WHICH REEXAMINATION IS REQUESTED

Reexamination is requested of Claims 1 through 8 of the Carroll patent in view of German Gebrauchsmuster No. 19 82 379. The German Gebrauchsmuster is also owned by the same patent owner. The patent owner acquired, by assignment, the Carroll patent for which reexamination is requested after the Carroll patent issued. The German Gebrauchsmuster is listed on attached form PTO-1449, and a copy of the German patent, as well as an English translation of the same, are enclosed.

EXPRESS MAIL CERTIFICATE

Date 3/18/88 Label No B91562722

I hereby certify that, on the date indicated above, I deposited this paper or fee with the U.S. Postal Service & that it was addressed for delivery to the Commissioner of Patents & Trademarks Washington D.C. 20231 by "EXPRESS MAIL Post Office to Addressee" service

Marguerite Franco Marguerite Franco

Name (Print) Signature

EXPLANATION OF PERTINENCY AND MANNER OF APPLYING CITED PRIOR ART TO CLAIMS 1 THROUGH 8, FOR WHICH REEXAMINATION IS REQUESTED

It is believed that the Patent and Trademark Office may consider the German Gebrauchsmuster to raise substantial new questions regarding the patentability of Claim 1 of the Carroll patent, when combined with the other references of record, such as U.S. Patent No. 3,390,580 (Taylor).

Claim 1 of the Carroll patent, the only independent claim, is repeated below:

> 1. A device for moving articles comprising a cylinder of non-ferrous material, a piston including a permanent magnet having a pole-piece on each axial side thereof, a body disposed outside and adjacent to said cylinder, said body including a permanent magnet which substantially surrounds the cylinder, there being a pole piece on each axial side of the permanent magnet included in said body, and means for controlling the admission of pressure fluid into the cylinder and exhaust of fluid from the cylinder for moving the piston in the cylinder, the attractive forces between the permanent magnets being such that movement of the piston causes corresponding movement of the body below a predetermined load on the body and such that above said predetermined load movement of the piston does not cause corresponding movement of the body.

The German patent discloses a device for transporting goods. The device includes a guide cylinder made from a non-magnetic material, a piston which supports an inner magnet and which reciprocatingly slides within the cylinder, and an outer magnet mounted on the outside of the cylinder.

The guide cylinder includes inlets and outlets for receiving and exhausting air or other pressure medium to effect reciprocal movement of the piston within the cylinder. The magnetic attraction between the inner and outer magnets causes the outer magnet to follow the piston in its movement along the cylinder.

STATEMENT POINTING OUT SUBSTANTIAL NEW QUESTION OF PATENTABILITY

The German patent referred to above is not of record in the prosecution file of the Carroll patent. The Carroll patent was assigned to the present patent owner (which also owns the German patent) after the Carroll patent had issued. It is believed that the Patent and Trademark Office (may) find the German patent, in combination with the other references which were cited during the prosecution of the Carroll patent (a copy of each reference is also enclosed and noted on PTO form 1449), to disclose several of the primary structural features of the device defined by Claim 1. Accordingly, a substantial new question of patentability with respect to Claim 1 may be raised by the additional disclosure of the German patent.

Claims 2 through 8 of the Carroll patent depend directly or indirectly from Claim 1. Because of the materiality of the German patent to the examination of main Claim 1 of the Carroll patent, and because of the dependency of the remaining claims of the Carroll patent on Claim 1, it is urged that a substantial new question of patentability may also exist with respect to depending Claims 2 through 8, and it is respectfully requested that these claims be reexamined along with Claim 1 of the Carroll patent.

Respectfully submitted,

Gerald T. Bodner

Gerald T. Bodner
Reg. No. 30,449
Attorney for Patent Owner

Hoffmann & Baron
350 Jericho Turnpike
Jericho, NY 11753
(516) 822-3550

GTB:mff

United States Patent [19]
Carroll

[54] PNEUMATIC DEVICE FOR MOVING ARTICLES

[76] Inventor: George Carroll, 12 Palmerston, Stockport, England

[22] Filed: Feb. 17, 1972
[21] Appl. No.: 227,570

[30] Foreign Application Priority Data
Feb. 18, 1971 Great Britain 4,890/71

[52] U.S. Cl. ..... 214/1 BB, 91/DIG. 4, 92/169
[51] Int. Cl. F01b 11/00
[58] Field of Search ..... 214/1 BB, 1 BT; 294/65.5; 91/DIG. 4; 92/169, 170

[56] References Cited
UNITED STATES PATENTS
3,390,580 7/1968 Taylor ..... 92/5 R X

[11] 3,779,401

[45] Dec. 18, 1973

2,346,857	8/1948	McLeod	91/DIG. 4
2,996,330	8/1961	Hutto	214/1 CM
3,168,203	2/1965	Gallistel	214/1 CM

Primary Examiner—Gerald M. Forlenza
Assistant Examiner—George F. Abraham
Attorney—Francis C. Browne et al.

[57] ABSTRACT

A device for moving articles comprising a cylinder of non-ferrous material, a piston including a magnet movable within said cylinder, means for controlling the admission of pressure fluid to the cylinder for moving said piston and a body disposed outside and adjacent to said cylinder, said body including a magnet, the arrangement being such that movement of said piston causes a corresponding movement of said body.

8 Claims, 6 Drawing Figures

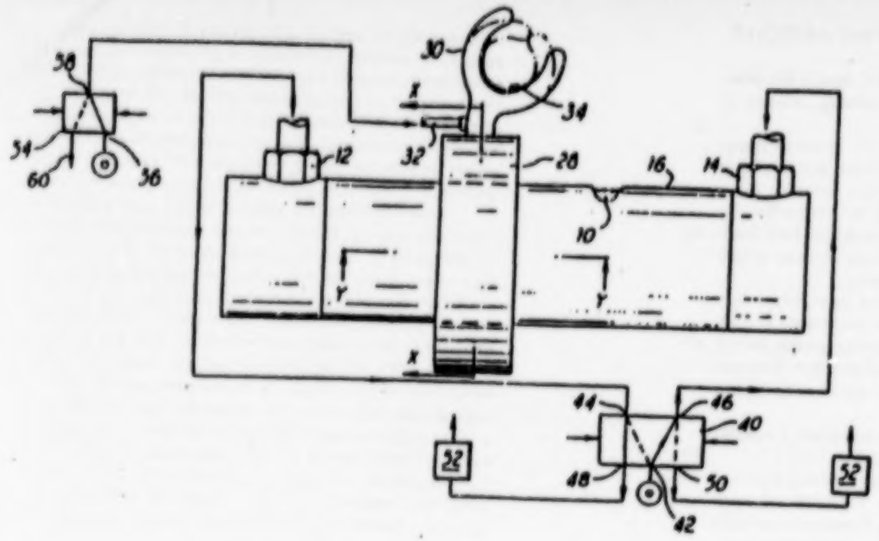

...UMATIC DEVICE FOR MOVING ARTICLES

This invention relates to a magnetic device for moving articles and in particular for moving articles of clothing.

It has previously been proposed to provide pneumatic devices which include a cylinder and a piston mounted on a piston rod working in said cylinder. Such devices suffer from the disadvantage that considerable space is required to accommodate the piston rod. Such a distance being up to twice the distance through which an article may be moved by the device.

Further, in the clothing industry in particular, very light loads are required to be moved preferably at high speeds or at both high speeds and slower speeds during transfer of an article from one site to another. Devices as previously proposed cannot operate in accordance with these requirements.

The present invention has been made from a consideration of the aforesaid disadvantages.

According to the invention there is provided a device for moving articles comprising a cylinder of non-ferrous material, a piston including a magnet movable within said cylinder, means for controlling the admission of pressure fluid to the cylinder for moving said piston and a body disposed outside and adjacent to said cylinder, said body including a magnet, the arrangement being such that movement of said piston causes a corresponding movement of said body.

In a preferred embodiment of the invention the body comprises an annular magnet surrounding the cylinder having means mounted thereon for holding or supporting an article. Inlets for pressure fluid are preferably provided at each end of the cylinder and the input and/or exhaust of pressure fluid to the cylinder is preferably controlled by a valve. Means may also be provided for adjusting the conditions of pressure fluid within the cylinder so that the piston movement can be halted during travel from one end of the cylinder to the other and/or so that the speed of the piston during travel of the cylinder can be varied.

The pressure fluid employed in the present invention is preferably compressed air so that the device is pneumatic. It is however possible for the pressure fluid to be a liquid so that the device is hydraulic.

The invention is particularly adapted to move light loads such as articles of clothing at high speeds and for this purpose the means for holding or supporting the article is preferably a resilient pneumatically operable gripping device.

A specific embodiment of the invention will now be described by way of example with reference to the accompanying drawings in which:

FIG. 1 shows the device and associated control means schematically;

FIG. 2 is a section on the line X—X of FIG. 1;

FIG. 3 is a section on the line Y—Y of FIG. 2.

FIG. 4 shows the magnetic field using a single magnet;

FIG. 5 shows the magnetic field where a plurality of magnets are employed; and

FIG. 6 shows the device in plan view.

Referring to the drawings the device comprises a cylinder 10 of non-ferrous material having parts 12 and 14 adjacent each end. A coating 16 of material having a low coefficient of friction, such as polytetrafluoromethylene, is formed on both outer and inner surfaces

...id cylinder. A piston 18 is located in the cylinder, the piston comprising a cylindrical permanent magnet 20, having a diameter less than the internal diameter of the cylinder 10, clamped between two non-ferrous piston end members 22, of substantially cylindrical shape but of overall diameter less than the internal diameter of the cylinder. The magnet 20 and piston end members are held together by means of a bolt 21 passing through a bore in the magnet and end members.

Each end member has an annular groove 24 thereround which accommodates a resilient sealing ring 26 adapted to engage the inner wall of the cylinder and form a fluid tight seal. Cushions of resilient material are fixed to each end member, or as shown in FIG. 2 to the head of the bolt 21 to prevent damage to the device when the piston reaches the ends of the cylinder.

A permanent magnet 28 of annular shape surrounds the cylinder with minimum clearance, the polarisation of magnets 20 and 28 being such that movement of the piston, and hence magnet 20 within the cylinder causes corresponding movement of magnet 28 outside the cylinder (see FIG.4). piston, and hence magnet 20 within the cylinder causes corresponding movement of magnet 28 outside the cylinder (see FIG.4).

A pneumatically operable article gripping device 30 is mounted on magnet 28. The gripper device 30 comprises a hollow substantially U-shaped body of resilient material, such as rubber, having an inlet 32 for pressure fluid. The U-shaped body is held in shape by means of light porous reinforcing material therewithin. A strip of material 34 is bonded to the body between the arms thereof, said material being material of less elasticity than that of the body so that when pressure fluid is admitted through inlet 32 the arms of the U-shaped body will bend inwards towards each other (as shown in dotted lines in FIG.1) and will grip any article therebetween. In order to prevent the magnet 28 rotating relative to the cylinder a guide rod 36 (FIG.6) is mounted outside the cylinder and axially parallel thereto, a tie bar 38 being fixed to the magnet and having a hole bore therein which runs freely on the guide rod.

The device is controllable by means of a five part spool valve 40 which has a port 42 connected to a supply of compressed air (not shown), port 44 connected to cylinder port 12, port 46 connected to cylinder port 14 and exhaust ports 48 and 50. As shown in FIG. 1 the spool valve is in position to supply compressed air to cylinder port 14 and cylinder port 12 is connected to exhaust port 48 so that the piston, and with it magnet 28 and gripping device 30, is moved to the left (as viewed in the drawing). On reversing the spool valve compressed air will be supplied to cylinder port 12 and cylinder port 14 will be connected to exhaust port 50 so that the piston moves towards the right. The exhaust ports of valve 40 are preferably connected to variable restrictor mechanisms 52 which are automatically operable to control the exhaust from the valve 40 and hence the speed of the piston in the cylinder.

The supply and exhaust of pressure air to the gripping device 30 is controlled by a spool valve 54 having a port 56 connected to a compressed air supply (not shown), a port 58 connected to inlet 32 and an exhaust port 60. The movement of the magnet 28 along the cylinder can be used to generate signals for operating the valve 54 and if desired the restrictor mechanisms 52 and valve 40.

As illustrated in FIG. 5 more than one magnet may

...vided on the piston and/or around the cylinder. ...t, however, preferred to arrange that the magnetic ...ce between the magnets should not be greatly in excess of that required to move the articles required to be transported. Thus should magnet 28 be obstructed by a person or by some object the piston can still move to the end of the cylinder without any damage to the device and without injury to the person or object.

The device according to the invention is capable of high speed operation, the speed of travel of the piston in the cylinder being a function of the volume of air admitted through the inlet port and exhausted through the exhaust port, this itself being a function of the size of the ports. By appropriate dimensioning of the ports it has been possible without difficulty to move a piston from one end of a 20 foot cylinder to the other end thereof in about 7 seconds.

The device may be used not only for the transfer of articles of clothing, but may be used to carry any article from one site to another along a predetermined path. Thus while the specific embodiment describes an arrangement suitable for transferring an article along a linear path, it is possible to shape the guide rod for example in the form of a helix so that the body will follow a helical path.

In the embodiment described with reference to the drawings a polytetra fluoroethylene coating is applied to the outer surface of the cylinder to provide a low friction surface upon which the body may run. As an alternative it is possible to provide an air bearing between the body and the cylinder. Further it is possible to use the repulsive force of magnets located in longitudinal grooves in the surface of the cylinder and further magnets disposed in the body which maintain the body spaced - apart from said cylinder.

If the device is designed for operation at high speeds, it may be found that the piston is decelerated too abruptly on reaching the end of the cylinder. Better control over deceleration of the piston may be accomplished by coupling the port which is exhausting to a chamber or cylinder containing a non-compressible fluid such as water.

The operation of the device may be triggered by any suitable means such as a timing device and/or a device

...nsitive to the presence, at one end of the device, of an article to be transferred thereby.

What is claimed is:

1. A device for moving articles comprising a cylinder of non-ferrous material, a piston including a permanent magnet having a pole-piece on each axial side thereof, a body disposed outside and adjacent to said cylinder, said body including a permanent magnet which substantially surrounds the cylinder, there being a pole piece on each axial side of the permanent magnet included in said body, and means for controlling the admission of pressure fluid into the cylinder and exhaust of fluid from the cylinder for moving the piston in the cylinder, the attractive forces between the permanent magnets being such that movement of the piston causes corresponding movement of the body below a predetermined load on the body and such that above said predetermined load movement of the piston does not cause corresponding movement of the body.

2. A device as claimed in claim 1, wherein the body comprises an annular magnet surrounding the cylinder ~~and means for holding or supporting an article.~~

3. A device as claimed in claim 2, wherein the means in said body for holding an article comprises a pneumatically operable gripping means.

4. A device as claimed in claim 3, wherein at least a part of the gripping means is adapted to grip an article and is made of resilient material.

5. A device as claimed in claim 1, wherein a port is provided at each end of the cylinder for the input of pressure fluid to, and exhaust of pressure fluid, from the cylinder.

6. A device as claimed in claim 5, wherein a valve is provided for controlling the input of pressure fluid and the exhaust of pressure fluid from the cylinder to thereby control the movement of the piston in the cylinder.

7. A device as claimed in claim 1 in which said body including the permanent magnet surrounds the cylinder.

8. A device as claimed in claim 1 in which the piston includes a plurality of permanent magnets.

Oct 1917

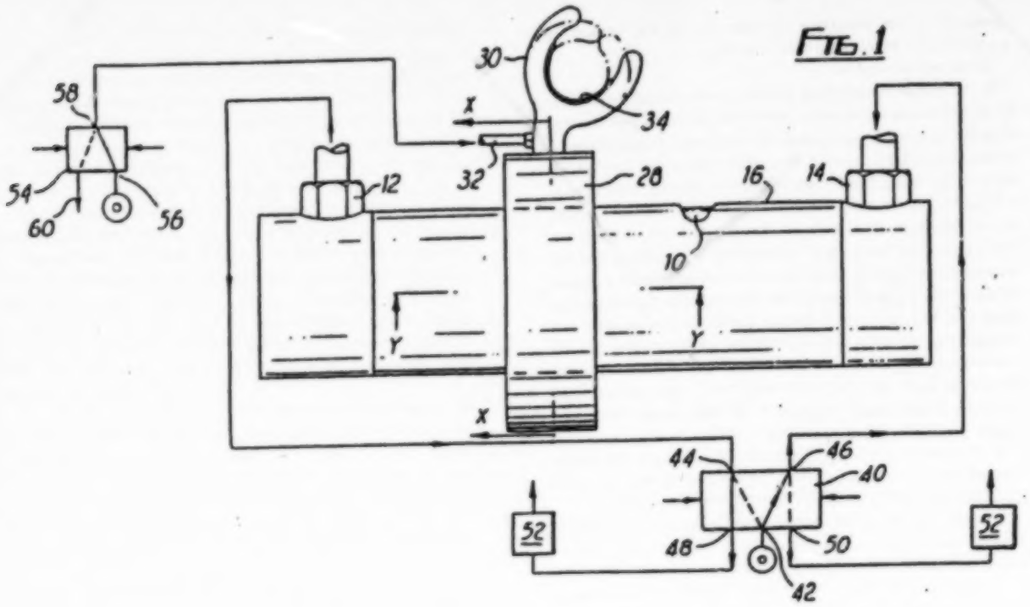
58
54
60
56
30
34
X
32
12
28
16
14
10
Y
Y
X
44
46
40
48
50
42
52
52

Фиг.1

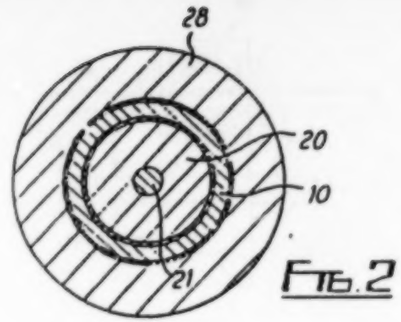
28
20
10
21

Фиг.2

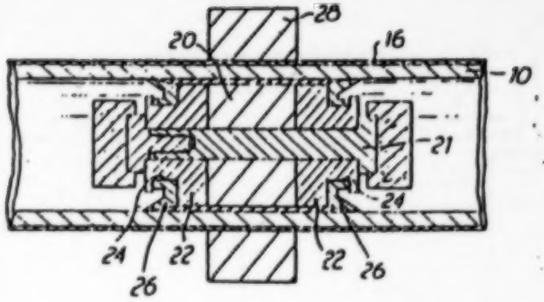

Фиг.3

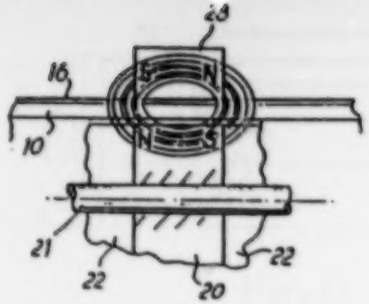

Фиг.4

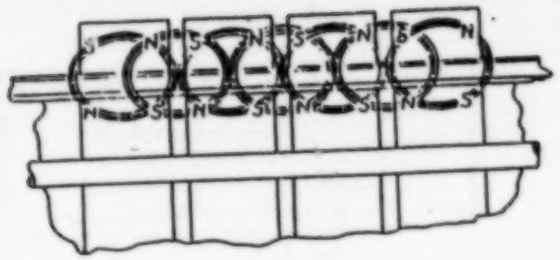

Фиг.5

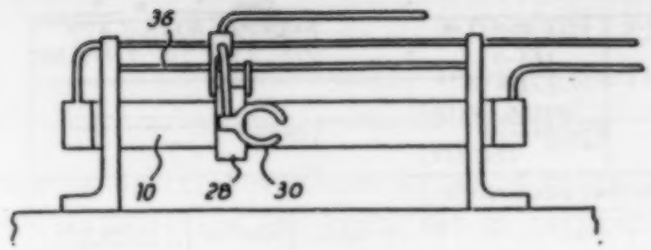

Фиг.6

Sheet 1 of 1

U.S. DEPARTMENT OF COMMERCE
PATENT AND TRADEMARK OFFICE

ATTY. DOCKET NO. 163-5

SERIAL NO. 40/001,477
U.S. Pat. No. 3,779,401

APPLICANT George Carroll

ISSUE DATE 12/18/73

GROUP 317

INFORMATION DISCLOSURE CITATION

(Use several sheets if necessary)

U.S. PATENT DOCUMENTS

EXAMINER INITIAL		DOCUMENT NUMBER	DATE	NAME	CLASS	SUBCLASS	FILING DATE IF APPROPRIATE
AP		3 3 9 0 5 8 0	7/68	Taylor	92	5R X	
AP		2 4 4 6 6 5 7	8/48	MacLeod et al.	91	Dig 4	
AP		2 9 9 6 3 3 0	8/61	Hutto	414	751 X	
AP		3 1 6 8 2 0 3	2/65	Gallistel	414	5	

FOREIGN PATENT DOCUMENTS

		DOCUMENT NUMBER	DATE	COUNTRY	CLASS	SUBCLASS	TRANSLATION YES	TRANSLATION NO
AP		1 9 8 2 3 7 9	3/68	West German Patent	—	—		

OTHER DOCUMENTS *(Including Author, Title, Date, Pertinent Pages, Etc.)*

EXAMINER Paperno

DATE CONSIDERED 8/22/88

*EXAMINER: Initial if citation considered, whether or not citation is in conformance with MPEP 609; Draw line through citation if not in conformance and not considered. Include copy of this form with next communication to applicant.

Dipl.-Ing.Kurt Stoll,Esslingen a.N.

FEEDING DEVICE FOR TRANSPORTING OF GOODS TO BE TRANSPORTED BETWEEN AN INITIAL POSITION AND GIVEN END OR INTERMEDIARY POSITIONS

The invention relates to a feeding device for transporting of goods to be transported between an initial position and given end or intermediary position being driven with the aid of a pressure medium as the movement generator,for example,a pneumatic or hydraulic medium.

Devices of the type in question are used,for example,as as hoisting like stroke devices,suspended four post like transport devices etc.

The known devices of the aforementioned type have a complicated structure in combination with large manufacturing costs and require a relatively large space requirement at the place of installation. Among others,and for this reason the use of these known devices is rather limited. It is therefore an object of the invention to overcome these disadvantages.

With respect to the aforementioned purpose the new feeding device in accordance with the invention is provided with a reciprocally movable piston without a piston rod in a tube or a pressure or operating cylinder between the initial position and the end position having the effect of a pressure medium and a reciprocally movable holding device for the goods to be transported being mounted outside of the tube or the pressure or operating cylinder being in a magnetic force connection and oerating connection with the piston. The new device may contain,for example,a reciprocally movable piston which moves under the effect of the pressure medium,a guide tube containing the piston acting as a pressure or operating cylinder made from a nonmagnetic material with inlets and outlets for the pressure medium,an inner magnet which is connected with the piston and guided along the inner wall,an outer magnet on the outer wall of the guide

being reciprocally movable at the area of the inner magnet and may also contain a reciprocally movable holding device for the goods to be transported at the outer magnet. The device in accordance with the invention,which is characterized by a very simple structure,enable to cut the space requirement to practically half of the space requirement with respect to known devices. For example,in hoisting like devices,stroke operated tables etc.,there is only a structural length required which corresponds to the stroke length ,while in the known comparable devices the installation length is about double of the length of the stroke length,so that customarily in such cases one buries the drive cylinder into the ground. The application range of pneumatic or hydraulic operating cylinders in cases of the type in question are substantially expanded with the inventive device,since one can now operate with overlong piston rods,for example,of 10 meters and more,without being afraid to cause instability, while with the known devices a piston rod length of maximal 2 - 3 metters are possible. The holding device of the inventive device is also movable around curves,whereby the guiding is simple,while with suspended feeding devices a lateral friction is caused in the case of curves by the rigid element.

Exemplified embodiments of the subject matter of the invention are illustrated in the drawing. The drawing shows:

Fig.1 a first embodiment of the subject matter of the invention in a side view in a partial illustration in a vertical section,
Fig.2 the device in accordance with Fig.1 in a section along line II-II of Fig.1,
Fig.3 the device in accordance with Fig.1 in a section in accordance with line III-III of Fig.1,
Fig.4a a modified embodiment of the subject matter of the invention in a mode of illustration corresponding to the one of Fig.2,
Fig.4b the device in accordance with Fig.4a,in a side view,
Fig.5 a modified embodiment of the subject matter of the invention in a mode of illustration corresponding to the one of Fig.3,

riation of the subject matter of the invention in a
llustration in a vertical section,
ication of the subject matter of the invention in a plan
n a schematic illustration and
variation of the device in accordance with Fig.7,also in a plan
view in a schematic illustration.

The device in accordance with the invention contains as its most important parts a piston 1 which is reciprocally movable in accordance with arrow 2 under the effect of a pressure medium,air pressure of liquid pressure,and a guide tube 3 cotaining the piston and guiding the same in the manner of a pressure or operating cylinder and which also contains inlets and outlets,not particularly illustrated,for the pressure medium. Moreover,the device in accordance with the invention also contains an inner magnet 4 which is rigidly connected with the piston and which is fed free of contact on the inside along the inner wall of the tube,as well as an outer magnet 5 which is fed contact free from the outside along the outer wall of the tube and between it and the piston is movable along the guide tube thanks to the magnetic force connection.A reciprocally movable holding device 6 for the goods to be transported is provided with the outer magnet being fed with a rolling friction on the guiding tube,for example.

In the embodiment in accordance with Fig.1 to 3 the piston 1 consists of a core 1a, which may be made,for example,from a nonmagnetic material like synthetic material and of packing rings 1b,1c which engage with their outer face or cirfumferential face on the inner tube wall and which act for a tight sealing of space 7 from space 8 within the guiding tube 3. The piston supports an inner magnet 4 which in this case is shaped as a magnetic ring. However,the inner magnet may also be shaped as a magnetic as a molded body,as is illustrated at 9 in Fig.4a,for example. In this latter case the piston is mounted on the inner wall of the guide tube with the assistance of a plurality of guide rollers,for example,three guide rollers 10a,10b,10c,whose rotational axis 11a,11b,11c extend transversely to the longitudinal axis and at an angle with respect to each other and which

their circumferences on the inner wall of the tube.These guide 10a,10b,10c are rotatably mounted on piston 12 in such a manner that that their longitudinal center planes are extend star like with respect to each other (Fig.4a) and form an angle of 120° with respect to each other,whereby their rotational axis are not contained in a single common plane (Fig.4b). In the device in accordance with Figs.1 to 3 the longitudinal prismatic shaped molded body of the piston is provided with one each flexible sealing ring 1b,1c made from rubber or synthetic material in the area of its both axial ends which with its outer circumference engages on the inner wall of the tube. The piston supports between its ends annular shaped inner magnets 4.

In the device in accordance with Figs.1 to 3,the outer magnet 5 is shaped as a magnetic molded body,whose active face 5a facing the guide tube 3 is correspondingly shaped with the associated segment of the tube circumference and is thereby curved toward the inside of the magnet or is cut out in a segment like manner. Such a structure of the outer magnet can also be seen in the magnets 13 of the device in accordance with Figs. 4a,4b. However,the outer magnet may also be shaped as the guiding tube as a ring extending in a coaxial arrangement. It could also be shaped as a not completely closed ring,as is illustrated at 14 which extends only 3/4 of the circumference of guide tube 15,for example.In accordance with Fig.6 the outer magnet may also be shaped as a completely closed ring 16 which completely encompasses the guide tube 17. While in the device in accordance with Fig.5 a space is provided for jolding devices of the guide tube within the movement path of the magnet,see for example,the holding devices 16 in Fig.5 or the holding device 19 in Fig.3,the device in accordance with Fig.6 is thought for cases wherein the guide tube,which extends only over a short axial length,is held at its both ends,whereby the transport movement occurs between these two ends,so that the holding devices do not interfere with the movement of the outer magnet 16. In the devices in accordance with Figs 5 and 6 the inner magnet is also shaped as a completely closed ring 20 or 21

device in accordance with Figs.1 to 3 the holding device 6 a molded body movably guided on the guide tube 3,whose area supports the outer magnet 5 which is connected with the load receiving. In this case the load acts in accordance with arrow 22. This holding device 6 is mounted on the guide tube with the assistance of two rollers 23a,23b which are rotatable and which support with their profiled outer circumference on guide tube 3. In the device in accordance with Fig.5 the mounting of such guide rollers as a supporting element is not required,since the inner ring and the outer ring are coaxially mounted into one another and are thereby mounted self centering in such a manner that the inner air slot is approximately even at all sides. Therefore,no friction occurs during the movement,for example,For this purpose rollers 24a,24b or the roller pairs which contain rollers 24a, 24b are provided which are not supporting rollers as is the case in the embodiment of Fig.1 to 3,but are only support rollers for the load. THis device,wherein the guide tube is a guide element,on the one hand,and as a supporting element,on the other hand,and also coacts during the drive is characterized in that a substantially largermagnetic force can be applied. The new system could also operate in the vertical direction

The support and guide tube advantageously consists of a synthetic material or of brass,for example,which is a nonmagnetic material. One can also form the inner and/or outer magnets as permanent magnets,however,one could also form them as electromagnets with an adjustable power. Finally,one could make the inner and/or outer magnets of only one permanent magnetic part and one total or partial electromagnetic part which can be switched on and switched off arbitrarily. This last modification of the subject matter of the invention permits the possibility to adjust the magnetic power to the given requirements.

The support and guide tube may extend in a straight line in accordance with Fig.7 in such a manner that the path of movement of the holding device for the goods to be transported extends in a straight direction in accordance with arrow 25 (Fig.7) between the initial position A and the end position B. However,the movement path may also be curved. IN the

It can have the form of a circle or an ellipse in accordance with the device in Fig.8, in such a manner thatthe holding device for the goods to be fed may move along an endless path along the ellipsoidal sjaped support and feeding tube 26.

CLAIMS

1. A feeding device for transporting of the goods to be transported between an initial position and given end or intermediary positions driven by the assistance of a pressure medium acting as the movement generator, for example, a pneumatic or hydraulic medium, characterized in that it is provided with a piston without a piston rod reciprocally fed in a tube or pressure or operating cylinder between the initial position and the end position and a holding device which is reciprocally moved with the piston in a magnetic power and operating connection outside of the tube or the pressure oroperating cylinder.

2. Feeding device in accordance with claim 1, characterized in that it contains a reciprocally moving piston which moves under the effect of the pressure medium and a guiding tube containing the piston and guiding the same in the manner of a pressure or operating cylinder made of a nonmagnetic material with inlets and outlets for the pressure medium, an inner magnet which is fixedly connected with the piston and guided inside of the inner tube wall in a contactless manner, a reciprocally moved outer magnet is fed on the outer wall of the guide tube at the area corresponding to the inner magnet and also contains a reciprocally movable holding device for the goods to be transported being movable together with the outer magnet.

3. Feeding device in accordance with claim 1 or 2, characterized in that the inner magnet is shaped as a magnetic ring.

4. Feeding device in accordance with claim 1 or 2, characterized in that the the inner magnet is shaped as a magnetic molded body.

5. Feeding device in accordance with one of claims 1 to 4, characterized in that the outer magnet is shaped as a magnetic molded body, whose active face which faces the guide tube is formed in accordance with the associated segment of the tube circumference, for example, is curved toward the inside of the magnet or is cut out segment like.

eeding device in accordance with one of claims 1 to 4,characterized in that the outer magnet is shaped as a magnetic ring which extends in a coaxial position around the guide tube in a not completely closed circumferance,for example,only about 3/4 of the circumference of the guide tube.

7. Feeding device in accordance with one of the claims 1 to 4,characterized in that the outer magnet is formed as a completely closed ring totally encompassing the guide tube in a coaxial arrangement.

8. Feeding device in accordance with one of claims 1 to 7,characterized in that the piston supports in its center area the inner magnet and is also movably mounted on the inner wall of the guide tube with the assistance of a plurality of three guide rollers,for example, whose rotating axis are mounted transversely to the longitudinal transverse axis,on the one hand,and extend in an angle with respect to each other,on the other hand,and which support with their circumferences on the inner tube wall.

9. Feeding device in accordance with claim 8,characterized in that that three guide rollers are rotatably mounted on the piston,whose longitudinal center planes extend star like with respect to each other and form one each angle of 120° with respect to each other, whereby advantageously their rotating axis are not contained in a single common plane with respect to each other.

10. Feeding device in accordance with claims 8 or 9,characterized in that the advantageous longitudinally prismatic piston supports one each packing ring in the areas of its front and rear axial end which with its outer circumferential face engages the inner tube wall.

Feeding device in accordance with one of claims 1 to 7,characterized in that the advantageously longitudinally prismatic molded body of the piston is provided at the area of its both axial ends with or each packing ring which with its outer circumference engages the inner wall of the tube being made from rubber or syynthetic material for example,and which supports between its ends the ring like shaped inner magnet.

12. Feeding device in accordance with claims 1 to 11,characterized in that the holding device is guided on the guide tube with a rolling friction.

13. Feeding device in accordance with claim 12,characterized in that the holding device is shaped as a molded body which is movably fed on the guide tube with the assistance of rotatably mounted guide rollers or guide roller pairs in the area of its front and rear end, whose center area supports the outer magnet and is connected with the laod receiving.

14. Feeding device in accordance with one of claims 1 to 11,characterize in that the holding devices are fed without guide rollers on the guide tube alone under the influence of the developed magnetic power flow.

15. Feeding device in accordance with claims 1 to 14,characterized in that the inner and/or outer magnet are shaped as a permanent magnet.

16. Feeding device in accordance with one of claims 1 to 14,characterize in that the inner and/or outer magnet is shaped as an electromagnet with adjustable power.

17. Feeding device in accordance with one of claims 1 to 14,characterize in that the inner and/or outer magnet consists of a permanent magnet part and of a partially electromagnetic part which can be switched o and off arbitrarily

mit dem Kolben fest verbundenen und innen entlang der Rohrinnenwandung berührungsfrei geführten Innenmagneten, einen außen an der Außenwandung des Führungsrohres entlang in deren den Innenmagneten entsprechenden Bereich hin und her beweglich geführten Außenmagneten und eine zusammen mit den Außenmagneten hin und her bewegliche Halterung für das Fördergut enthalten. Die erfindungsgemäße Anordnung, die sich durch einen denkbar einfachen Aufbau auszeichnet, macht es möglich, den Raumaufwand auf praktisch die Hälfte des Aufwandes bei üblichen bekannten Anordnungen herabzusetzen. So z.B. ist bei aufzugartigen Vorrichtungen, Hubtischen usw. nur noch eine der Hublänge entsprechende Einbaulänge erforderlich, während bei den bekannten vergleichbaren Anordnungen die Einbaulänge etwa doppelt so groß wie die Hublänge ist, weswegen man in diesen Fällen manchmal den Antriebszylinder in den Boden eingräbt. Mit der erfindungsgemäßen Anordnung wird der Anwendungsbereich von pneumatischen oder hydraulischen Arbeitszylindern in Fällen der hier in Frage stehenden Art wesentlich erweitert, da man nunmehr mit überlangen Kolbenstangen, z.B. von 10 m und mehr arbeiten kann, ohne Instabilität zu befürchten, während bei bekannten Anordnungen eine Kolbenstangenlänge von maximal 2 - 3 m möglich ist. Die Halterung der erfindungsgemäßen Anordnung ist auch um Kurven bewegbar, wobei die Führung einfach ist, während bei Hängeförderern im Falle von Kurven eine seitliche Reibung des ziehenden Elementes auftritt.

In der Zeichnung sind Ausführungsbeispiele des Gegenstandes der Erfindung dargestellt. Es zeigen:

Fig. 1 eine erste Ausführungsform des Gegenstandes der Erfindung in einer Seitenansicht in Teildarstellung in einem senkrechten Schnitt,

Fig. 2 die Anordnung nach Fig. 1 in einem Schnitt gemäß der Linie II-II der Fig. 1,

Fig. 3 die Anordnung nach Fig. 1 in einem Schnitt gemäß der Linie III-III der Fig. 1,

Fig. 4 a eine abgewandelte Ausführungsform des Gegenstandes der Erfindung in einer Darstellungsweise entsprechend derjenigen nach Fig. 2,

Fig. 4 b die Anordnung nach Fig. 4 a in einer Seitenansicht,

Fig. 5 eine abgewandelte Ausführungsform des Gegenstandes der Erfindung in einer Darstellungsweise entsprechend derjenigen nach Fig. 3,

Fig. 6 eine weitere Variante des Erfindungsgegenstandes in Teildarstellung in einem senkrechten Schnitt,

II-167

PATENTANWALT
Dipl.-Ing. RUDOLF MAGENBAUER

D 1033 - rele

DE-Gm 19 82 379

Dipl.-Ing. Kurt Stoll, Esslingen a. N.

Fördervorrichtung zum Transportieren des Fördergutes zwischen einer Ausgangsstellung und gegebenen End- oder Zwischenstellungen

Die Erfindung betrifft eine mit Hilfe eines Druckmediums als Bewegungserzeuger, z. B. eines pneumatischen oder hydraulischen Mediums betriebene Fördervorrichtung zum Transportieren des Fördergutes zwischen einer Ausgangsstellung und gegebenen End- oder Zwischenstellungen.

Anordnungen der hier in Frage stehenden Art werden z. B. als aufzugartige Hubvorrichtungen, Hängeförderer, rohrpostartige Transportvorrichtungen usw. verwendet.

Die bekannten Anordnungen der vorgenannten Art haben einen komplizierten, mit großen Herstellungskosten verbundenen Aufbau und machen darüber hinaus einen relativ großen Aufwand an Einbauraum erforderlich. U.a. auch aus diesem Grunde ist die Anwendung dieser bekannten Anordnungen beschränkt. Das Ziel der Erfindung besteht darin, hier Abhilfe zu schaffen.

Zu den oben genannten Zweck besitzt gemäß der Erfindung die neue Fördervorrichtung einen in einem Rohr oder Druck- oder Arbeitszylinder zwischen der Ausgangsstellung und der Endstellung unter Wirkung des Druckmediums hin und her beweglich geführten kolbenstangenlosen Kolben und eine außerhalb des Rohres oder Druck- oder Arbeitszylinders geführte, mit den Kolben in magnetischer Kraft- und Wirkverbindung stehende und hierbei mit diesen hin und her bewegliche Halterung für das Fördergut. Die neue Vorrichtung kann hierbei z. B. einen unter Einwirkung des Druckmediums hin und her beweglichen Kolben, ein den Kolben enthaltendes und führendes und hierbei in der Art eines Druck- oder Arbeitszylinders wirkendes Führungsrohr aus nichtmagnetischem Material mit Ein- und Auslassen für das Druckmedium, einen

II-166

mit seinem Außenumfang an der Rohrinnenwand anliegt. Der Kolben trägt zwischen seinen Enden den ringartig ausgebildeten Innenmagneten 4.

Bei der Anordnung nach Fig. 1 bis 3 ist der Außenmagnet 5 als magnetisches Formstück ausgebildet, dessen dem Führungsrohr 3 zugewandte wirksame Fläche 5 a den zugeordneten Abschnitt des Rohrumfangs entsprechend ausgebildet und hierbei nach den Magnetinneren gewölbt oder segmentartig ausgeschnitten ist. Eine solche Ausbildung des Aussenmagneten ist auch bei den Magneten 13 der Anordnung nach Fig. 4 a, 4b gezeigt. Der Außenmagnet kann jedoch auch als das Führungsrohr in koaxialer Anordnung umgebender Ring ausgebildet sein. So kann er als ein nicht völlig geschlossener Ring ausgebildet sein, wie er bei 14 dargestellt ist, der sich z.B. nur über 3/4 des Umfangs des Führungsrohres 15 erstreckt. Gemäß Fig. 6 kann der Außenmagnet auch als völlig geschlossener Ring 16 ausgebildet sein, der das Führungsrohr 17 ganz umschließt. Während bei der Anordnung nach Fig. 5 Platz für Halterungen des Führungsrohres innerhalb der Bewegungsbahn des Magneten vorhanden ist, vgl. z.B. die Halterungen 18 in Fig. 5 oder die Halterung 19 in Fig. 3, ist die Anordnung gemäß Fig. 6 für Fälle gedacht, bei denen das Führungsrohr, das sich nur über eine kurze axiale Länge erstreckt, an seinen beiden Enden gehaltert ist, wobei die Transportbewegung zwischen diesen beiden Enden stattfindet, so daß die Halterungen die

Bewegung des Außenmagneten 16 in keiner Weise stören. Bei den Anordnungen nach Fig. 5 und 6 ist im übrigen der Innenmagnet ebenfalls als völlig geschlossener Ring 20 bzw. 21 ausgebildet.

Bei der Anordnung nach Fig. 1 bis 3 ist die Halterung 6 als an Führungsrohr 3 verschieblich geführtes Formstück ausgebildet, dessen mittlerer Bereich den Außenmagneten 5 trägt und das mit der Lastaufnahme verbunden ist. Die Last wirkt in diesem Falle gemäß Pfeil 22. Diese Halterung 6 ist an Führungsrohr mit Hilfe von zwei Rollen 23a, 23b gelagert, die drehbar sind und sich mit ihren profilierten Außenumfang an Führungsrohr 3 abstützen. Bei der Anordnung nach Fig. 5 hingegen ist das Anbringen von solchen Führungsrollen als tragendes Element nicht erforderlich, da der Innenring und der Außenring koaxial ineinander gelagert und somit selbstzentrierend angeordnet sind, derart, daß der Luftspalt zwischen ihnen an allen Seiten annähernd gleich ist. Es findet z.B. somit keine Reibung während der Bewegung statt. Aus diesem Grunde dienen die Rollen 24a, 24b bzw. die Rollenpaare, die jeweils Rollen 24a, 24b enthalten, nicht als Abstützrollen, wie bei der Ausführungsform nach Fig. 1 bis 3, sondern nur noch als Tragrollen für die Last. Diese Anordnung, bei der das Führungsrohr 15 einerseits als Führungselement und andererseits als tragendes Element wirkt und darüber hinaus beim Antrieb mitwirkt, zeichnet sich da-

Fig. 7 eine Abwandlung des Gegenstandes der Erfindung in einer Draufsicht in schematischer Darstellung und

Fig. 8, eine Variante zu der Anordnung nach Fig. 7 ebenfalls in einer Draufsicht in schematischer Darstellung.

Die erfindungsgemäße Anordnung enthält als wichtigste Teile einen Kolben 1, der unter Einwirkung des Druckmediums - Druckluft oder Druckflüssigkeit - gemäß Pfeil 2 hin und her beweglich ist, und ein Führungsrohr 3, das den Kolben enthält und führt und hierbei in der Art eines Druck- oder Arbeitszylinders wirkt und das demzufolge nicht weiter dargestellte Einlässe und Auslässe für das Druckmedium besitzt. Außerdem enthält die erfindungsgemäße Vorrichtung einen Innenmagneten 4, der mit dem Kolben fest verbunden ist und von innen her an der Rohrinnenwandung entlang berührungsfrei geführt ist, sowie einen Aussenmagneten 5, der von außen her an der Rohraußenwandung entlang berührungsfrei geführt ist und dank der magnetischen Kraftverbindung zwischen ihm und den Kolben mit diesem am Führungsrohr entlang beweglich ist. Mit dem Aussenmagneten ist eine mit ihm hin und her bewegliche Halterung 6 für das Fördergut vorgesehen, die am Führungsrohr z. B. unter rollender Reibung geführt ist.

Bei der Ausführungsform nach Fig. 1 bis 3 besteht der Kolben 1 aus einem Kern 1a, der z. B. aus nichtmagnetischem Material, z.B. Kunststoff hergestellt werden kann, und aus Dichtungsringen 1b, 1c, die mit ihrer Aussenfläche oder Umfläche an der Rohrinnenwand anliegen und zum dichten Abschließen des Raumes 7 von Raum 8 innerhalb des Führungsrohres 3 dienen. Der Kolben trägt einen Innenmagneten 4, der in diesem Falle als Magnetring ausgebildet ist. Der Innenmagnet kann jedoch auch als magnetisches Formstück ausgebildet sein, wie z.B. bei 9 in Fig. 4a gezeigt ist. In diesem letzteren Falle ist der Kolben an der Innenwand des Führungsrohres mit Hilfe von mehreren Führungsrollen, z.B. drei Führungsrollen 10a, 10b, 10c gelagert, deren Drehachsen 11a, 11b, 11c quer zur Rohrlängsachse und unter einem Winkel zueinander verlaufen und die sich mit ihren Umfang an der Rohrinnenwand abstützen. Diese Führungsrollen 10a, 10b, 10c sind am Kolben 12 so drehbar gelagert, daß ihre Längsmittelebenen sternartig zueinander verlaufen (Fig. 4 a) und hierbei jeweils einen Winkel von 120° miteinander bilden, wobei ihre Drehachsen nicht in einer einzigen gemeinsamen Ebene enthalten sind (Fig. 4 b). Bei der Anordnung nach Fig. 1 bis 3 hingegen ist der als kurzer prismatischer Formstück ausgebildete Kolben in Bereich einer beiden axialen Enden jeweils mit einen elastischen Dichtungsring 1b, 1c aus Gummi oder Kunststoffmaterial versehen, der

II-169

II-168

Führungsrohres erstreckender magnetischer Ring ausgebildet ist.

7. Fördervorrichtung nach einem der Ansprüche 1 bis 4, dadurch gekennzeichnet, daß der Außenmagnet als das Führungsrohr in koaxialer Anordnung umschließender, völlig geschlossener Ring ausgebildet ist.

8. Fördervorrichtung nach einem der Ansprüche 1 bis 7, dadurch gekennzeichnet, daß der Kolben in seinem mittleren Bereich den Innenmagneten trägt und im übrigen an der Innenwand des Führungsrohres mit Hilfe von mehreren, z.B. drei Führungsrollen verfahrbar gelagert ist, deren Drehachsen einerseits etwa quer zur Kolbenlängsachse und andererseits unter einem Winkel zueinander verlaufen und die sich mit ihrem Umfang an der Rohrinnenwand abstützen.

9. Fördervorrichtung nach Anspruch 8, dadurch gekennzeichnet, daß am Kolben drei Führungsrollen drehbar gelagert sind, deren Längsmittelebenen sternartig zueinander verlaufen und hierbei jeweils einen Winkel von 120° miteinander bilden, wobei zweckmäßig ihre Drehachsen nicht in einer einzigen gemeinsamen Ebene enthalten sind.

- 13 -

Rohrinnenwandung berührungsfrei geführten Innenmagneten, einen außen an der Außenwandung des Führungsrohres entlang in deren den Innenmagneten entsprechenden Bereich hin und her beweglich geführten Außenmagneten und eine zusammen mit den Außenmagneten hin und her bewegliche Halterung für das Fördergut enthält.

3. Fördervorrichtung nach Anspruch 1 oder 2, dadurch gekennzeichnet, daß der Innenmagnet als Magnetring ausgebildet ist.

4. Fördervorrichtung nach Anspruch 1 oder 2, dadurch gekennzeichnet, daß der Innenmagnet als magnetisches Formstück ausgebildet ist.

5. Fördervorrichtung nach einem der Ansprüche 1 bis 4, dadurch gekennzeichnet, daß der Außenmagnet als magnetisches Formstück ausgebildet ist, dessen dem Führungsrohr zugewandte wirksame Fläche dem zugeordneten Abschnitt des Rohrumfangs entsprechend ausgebildet, z.B. nach dem Magnetisieren so gewölbt oder segmentartig ausgeschnitten ist.

6. Fördervorrichtung nach einem der Ansprüche 1 bis 4, dadurch gekennzeichnet, daß der Außenmagnet als ein das Führungsrohr in koaxialer Anordnung umgebender, nicht völlig geschlossener, sich z.B. nur über 3/4 des Umfangs des

- 12 -

II-171

durch aus, daß eine wesentlich größere magnetische Kraft aufgewendet werden kann. Das neue System könnte im übrigen auch in umgekehrter Richtung arbeiten.

Das Trag- und Führungsrohr besteht zweckmäßigerweise aus Kunststoffmaterial oder z.B. auch aus Messing, also insgesamt aus einem nicht magnetischen Werkstoff.

Man kann die Innen- und/oder Außenmagnete als Permanentmagnete ausführen, man kann sie jedoch auch als Elektromagnete einstellbarer Stärke ausbilden. Schließlich kann man die Innen- und/oder Außenmagnete auch aus einer permanentmagnetischen Partie und einer ganz oder teilweise beliebig an- und abschaltbaren elektromagnetischen Partie herstellen. Diese letztere Variante des Erfindungsgegenstandes gibt die Möglichkeit, die magnetische Kraft den jeweiligen Erfordernissen anzupassen.

Das Trag- und Führungsrohr kann gemäß Fig. 7 geradlinig verlaufen, derart, daß die Bewegungsbahn der Halterung für das Fördergut zwischen der Ausgangsstellung A und der Endstellung B in gerader Richtung gemäß Pfeil 25 verläuft (Fig. 7). Die Bewegungsbahn kann jedoch auch gekrümmt sein. Im Extremfall kann sie gemäß der Anordnung nach Fig. 8 die Form eines Kreises oder einer Ellipse haben, derart, daß die Halterung für das Fördergut sich entlang des ellipsenartig geformten Trag- und Führungsrohr 26, also entlang einer endlosen Bahn bewegen kann.

- 10 -

Ansprüche

1. Mit Hilfe eines Druckmediums als Bewegungserzeuger, z.B. eines pneumatischen oder hydraulischen Mediums, betriebene Fördervorrichtung zum Transportieren des Fördergutes zwischen einer Ausgangsstellung und gegebenen End- oder Zwischenstellungen, dadurch gekennzeichnet, daß sie einen in einem Rohr oder Druck- oder Arbeitszylinder zwischen der Ausgangsstellung und der Endstellung hin und her beweglich geführten kolbenstangenlosen Kolben und eine außerhalb des Rohres oder Druck- oder Arbeitszylinders geführte, mit dem Kolben in magnetischer Kraft- und Wirkverbindung stehende und hierbei mit diesem hin und her bewegliche Halterung für das Fördergut besitzt.

2. Fördervorrichtung nach Anspruch 1, dadurch gekennzeichnet, daß sie einen unter Einwirkung des Druckmediums hin und her beweglichen Kolben, ein den Kolben enthaltendes und führendes und hierbei in der Art eines Druck- oder Arbeitszylinders wirkendes Führungsrohr aus nicht-magnetischem Material mit Ein- und Auslässen für das Druckmedium, einen mit dem Kolben fest verbundenen und innen entlang der

- 11 -

II-170

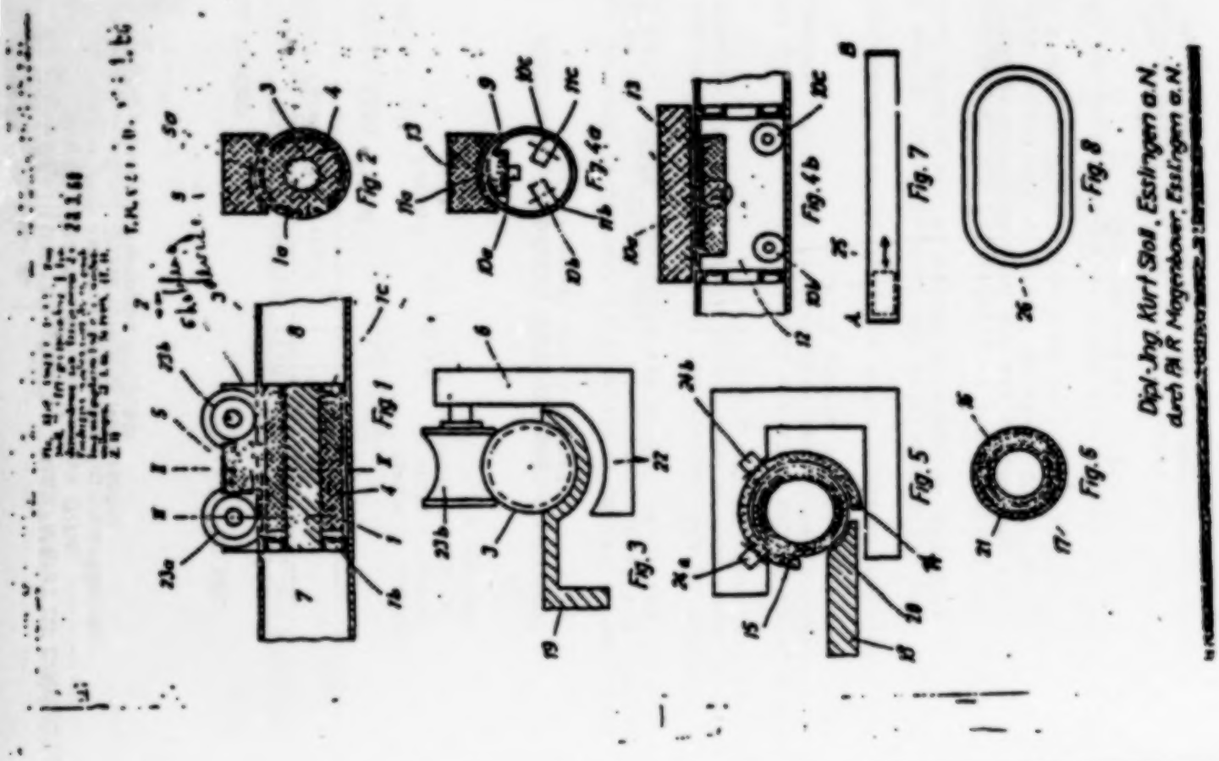

II-173

10. Fördervorrichtung nach Anspruch 8 oder 9, dadurch gekennzeichnet, daß der vorteilhaft länglich prismatische Kolben in den Bereichen seines vorderen und seines hinteren axialen Endes jeweils einen Dichtungsring trägt, der mit seiner äußeren Umfläche an der Rohrinnenwand anliegt.

11. Fördervorrichtung nach einem der Ansprüche 1 bis 7, dadurch gekennzeichnet, daß der als vorteilhaft länglich-prismatisches Formstück ausgebildete Kolben im Bereich seiner beiden axialen Enden jeweils einen mit seinem Außenumfang an der Rohrinnenwand anliegenden Dichtungsring, z.B. aus Gummi oder Kunststoffmaterial und zwischen seinen Enden den ringartig ausgebildeten Innenmagneten trägt.

12. Fördervorrichtung nach einem der Ansprüche 1 bis 11, dadurch gekennzeichnet, daß die Halterung am Führungsrohr unter rollender Reibung geführt ist.

13. Fördervorrichtung nach Anspruch 12, dadurch gekennzeichnet, daß die Halterung als am Führungsrohr mit Hilfe von zwei im Bereich ihres vorderen und ihres hinteren Endes drehbar gelagerten Führungsrollen oder Führungsrollenpaaren verschieblich geführtes Formstück ausgebildet ist, dessen mittlerer Bereich den Außenmagneten trägt und mit der Lastaufnahme verbunden ist.

14. Fördervorrichtung nach einem der Ansprüche 1 bis 11, dadurch gekennzeichnet, daß die Halterung am Führungsrohr führungsrollenlos allein unter Wirkung des entwickelten magnetischen Kraftflusses geführt ist.

15. Fördervorrichtung nach einem der Ansprüche 1 bis 14, dadurch gekennzeichnet, daß der Innen- und/oder Außenmagnet als Permanentmagnet ausgebildet ist.

16. Fördervorrichtung nach einem der Ansprüche 1 bis 14, dadurch gekennzeichnet, daß der Innen- und/oder Außenmagnet als Elektromagnet einstellbarer Stärke ausgebildet ist.

17. Fördervorrichtung nach einem der Ansprüche 1 bis 14, dadurch gekennzeichnet, daß der Innen- und/oder Außenmagnet aus einer permanentmagnetischen Partie und einer ganz oder teilweise beliebig zu- und abschaltbaren elektromagnetischen Partie bestehen.

II-172

UNITED STAT[redacted] DEPARTMENT OF COMMERCE
Patent and Tr[redacted]mark Office,
ASSISTANT SECRETARY AND COMMISSIONER
OF PATENTS AND TRADEMARKS
Washington, D.C. 20231

PAPER NO.

TITLE REPORT

A. PATENT FILE DATA

Serial No. 227,570 Filed 2-17-72

Patent No. 3,779,401 Issued 12-18-73

Inventor (s) -Full Name (s) (Continue on reverse side if necessary)

GEORGE CARROLL

DIVISION OF:

CONTINUATION OF:

CONTINUATION-IN-PART OF:

REISSUE OF :

SUBSTITUTE OF:

REEXAMINATION OF REEXAM NO:

B. ASSIGNMENT RECORD DATA

The assignment records reveal that the Title appears to be vested in;

☐ INVENTOR (s) R-3951 7-694

☐ AS ENDORSED Rec= 03-05-82

☐ AS THE RECORD NOW STANDS, THE PATENT, WHEN GRANTED WILL ISSUE IN THE NAME OF THE INVENTOR (s)

☐ LEGAL REPRESENTATIVE

☑ OTHER: Festo KG

Esslingen-Berkheim, west

Examined up to and Including: 3-18-88

This Certificate Dated 4-5-88

DIANE G. RUSSELE

EXAMINING OFFICER ASSIGNMENT DIVISION

UNITED STATES DEPARTMENT OF COMMERCE
Patent and Trademark Office
Address: COMMISSIONER OF PATENTS AND TRADEMARKS
Washington, D.C. 20231

RX-4A

Reexam Control No.	Filing Date	Patent Number	Paper No.
90/001,477	3-18-88	3,779,401	3

DATE MAILED

APR 13, 1988

GERALD T. BODNER
HOFFMAN & BARON
350 JERICHO TURNPIKE
JERICHO, NY 11753

NOTICE OF REEXAMINATION REQUEST FILING DATE
(Patent Owner Requester)

Requester is hereby notified that the filing date of the request for reexamination is MAR 18, 1988, the date the required fee of $1,770.00 was received. 37 CFR 1.510 (d).

A decision on the request for reexamination will be mailed within three months from the filing date of the request for reexamination. 37 CFR 1.515 (a).

Pursuant to 37 CFR 1.33(c), future correspondence in this reexamination proceeding will be with the latest attorney or agent of record in the patent file.

The paragraphs checked below are part of this communication:

☐ 1. The party receiving the courtesy copy is the latest attorney or agent of record in the patent file.

☒ 2. The person named to receive the correspondence in this proceeding has not been made the latest attorney or agent of record in the patent file because:

☐ A. Requester's claim of ownership of the patent is not verified by the record.

☐ B. The request papers are not signed with a real or apparent binding signature.

☒ C. The mere naming of a correspondence addressee does not result in that person being appointed as the latest attorney or agent of record in the patent file.

☐ 3. Addressee is latest attorney or agent of record in the patent file.

☐ 4. Other. MR. BODNER THIS IS A FORM LETTER IN REGARD TO THE PWR OF ATTY. PER OUR CONVERSATION I AM WAITING FOR YOUR PWR OF ATTY

L. I. Batchelor
For the Manager Reexamination
Preprocessing Unit

cc:

UNITED STAT DEPARTMENT OF COMMERCE
Patent and T Amark Office
ASSISTANT SECRETARY AND COMMISSIONER
OF PATENTS AND TRADEMARKS
Washington, D.C. 20231

Reexam Control No	Filing Date	Patent Number	Paper No
90/001,477	3-18-88	3,779,401	4

DATE MAILED
APR 14, 1988

GERALD T. BODNER
HOFFMAN & BARON
350 JERICHO TURNPIKE
JERICHO, NY 11753

NOTICE OF ASSIGNMENT OF REEXAMINATION REQUEST
(SHORT VERSION)

1. The above identified request for reexamination has been assigned to Examining Group 310. All future correspondence to this proceeding should be identified by the control number listed above and directed to the assigned Examining Group.

2. A copy of this Notice is being sent to the latest attorney or agent of record in the patent file or to all owners of record. 37 CFR 1.33 (c). If the addressee is not, or does not represent, the current owner, he or she is required to forward all communications regarding this proceeding to the current owner(s). An attorney or agent receiving this communication who does not represent the current owner(s) may wish to seek to withdraw pursuant to 37 CFR 1.36 in order to avoid receiving future communications. If the address of the current owner(s) is unknown, this communication should be returned with the request to withdraw pursuant to Section 1.36.

L. L. Batchelor
For the Manager, Of Special
Handling Unit

cc:

UNITED STATES DEPARTMENT OF COMMERCE
Patent and Trademark Office
Address COMMISSIONER OF PATENTS AND TRADEMARKS
Washington, D.C. 20231

FILING DATE	PATENT UNDER REEXAMINATION	ATTORNEY DOCKET NO
03/18/88	PAT NO 3779401	

GERALD T. BODNER
HOFFMAN & BARON
350 JERICHO TURNPIKE
JERICHO, NY 11753

EXAMINER	
DOYLE J.	
ART UNIT	PAPER NUMBER
217	5

DATE MAILED:
05/25/88

ORDER GRANTING/DENYING REQUEST FOR REEXAMINATION

The request for reexamination filed 3/18/88 has been considered. Identification of the claims, the references relied on and the rationale supporting the determination are attached.

Attachment(s): ☐ PTO-892 ☒ PTO-1449

ORDER:

1. ☒ The request for reexamination is GRANTED.

RESPONSE TIMES ARE SET TO EXPIRE AS FOLLOWS:

For Patent Owner's Statement:
TWO MONTHS from the date hereof. 37 C.F.R. 1.530(b).

For Requester's Reply:
TWO MONTHS from the date of service of any patent owner's statement. 37 C.F.R. 1.535.

Notes: If the patent owner does not file a timely statement under 37 C.F.R. 1.530(b), no reply from the reexamination requester will be considered. 37 C.F.R. 1.535.

The patent owner must submit, on a separate paper, the names of the attorneys or agents (maximum of three) which the owner desires to have printed on the reexamination certificate. If no names are submitted, none will appear on the certificate.

2. ☐ The request for reexamination is DENIED.

This decision is not appealable. 35 U.S.C. 303(c). Requester may seek review by a petition to the Commissioner within one month from the mailing date hereof. 37 C.F.R. 1.515(c).

In due course, a refund of $1200.00 will be made ☐ by treasury check or ☐ by credit to deposit account number _____ to the requester listed below unless notified otherwise. 35 U.S.C. 303(c).

CC:

DECISION

A substantial new question of patentability affecting claims 1-8 of United States Patent Number 3,779,401 is raised by the request for reexamination.

Extensions of time under 37 CFR 1.136(a) will not be permitted in these proceedings because the provisions of 37 CFR 1.136 apply only to "an applicant" and not parties in a reexamination proceeding. Additionally, Office policy requires that reexamination proceedings "will be conducted with special dispatch" (37 CFR 1.550(a)) and provides for extensions of time in reexamination proceedings as set forth in 37 CFR 1.550(c).

German Gebrauchsmuster No. 1,982,379 (newly cited in the Request for Reexamination) discloses an article feeding device comprising a body including an article transport device (or holder) and a magnet movably mounted on the outside of a non-magnetic cylinder wherein a magnetic piston inside the cylinder is moved back and forth in response to the supply and relief of hydraulic fluid within the cylinder, thereby moving the article transport device. The Taylor patent of record in the prosecution of U.S. patent no. 3,779,401 does not disclose an article transport device but rather a magnetic indicator on the outside of a cylinder which follows a magnetic piston within the cylinder to indicate the position of the magnetic piston.

As German document 1,982,379 discloses an article transport device which is movable in response to a hydraulically operated magnetic piston, which is a feature that was not found by the Examiner during the prosecution of the application which matured into the subject patent, and this feature is

material to the patentability of all of the claims in the patent, it is therefore determined that a substantial new question of patentability has been raised.

DOYLE:jf
703 557-3618
5/18/88

5/25/88

5/23/88
ROBERT J. SPAR
SUPERVISORY PATENT EXAMINER
ART UNIT 317

RECEIVED
JULL-25.1988
APPLICATION BRANCH

6/a
E. Key
7/27/88

IN THE UNITED STATES PATENT AND TRADEMARK OFFICE

Reexamination Control No.: 90/001,477 Art Unit: 317

Filed: March 18, 1988 Examiner: J. Doyle

Patentee: George Carroll Docket: 163-5

U.S. Patent No.: 3,779,401 Date: July 21, 1988

For: PNEUMATIC DEVICE FOR MOVING ARTICLES

STATEMENT AND AMENDMENT UNDER 37 C.F.R. SECTION 1.530(b)

Commissioner of Patents
and Trademarks
Box REEXAM
Washington, D.C. 20231

Dear Sir:

In response to the Order dated May 25, 1988, granting the patent owner's request for reexamination, please amend the above-identified patent as follows:

In The Claims:

Please cancel claim 1 and substitute the following new claim therefor:

--9. A device for moving articles, which comprises:

a hollow cylinder formed of non-ferrous material and having opposite axial ends;

a piston mounted in the interior of the hollow cylinder and reciprocatingly slidable therein, the piston including a central mounting member disposed axially in the cylinder, a plurality of cylindrically-shaped permanent magnets mounted on the central mounting member and spaced apart axially from each other, each magnet having a bore formed axially therethrough for receiving the central mounting member, at least one pair of end members mounted on the central mounting member and disposed on opposite axial sides of the plurality of magnets, a pair of cushion members formed of resilient material, the

a,

cushion members being situated near opposite axial ends of the central mounting member to help prevent damage to the piston when the piston contacts an axial end of the cylinder, and a pair of resilient sealing rings situated near opposite axial ends of the central mounting member and engaging the cylinder to effect a fluid-tight seal therewith;

a body mounted on the exterior of the hollow cylinder and reciprocatingly slidable thereon, the body including a plurality of annularly shaped permanent magnets surrounding the cylinder and spaced apart from each other, the permanent magnets of the piston and body being polarized so as to magnetically couple the body to the piston whereby movement of the piston inside the cylinder causes a corresponding movement of the body outside the cylinder, the body further including means provided thereon for holding on the body an article to be moved; and

means for controlling the admission of pressure fluid into the cylinder and exhaust fluid from the cylinder for moving the piston in the cylinder, the attractive forces between the permanent magnets of the piston and the body being such that movement of the piston causes corresponding movement of the body below a predetermined load on the body and such that above said predetermined load movement of the piston does not cause corresponding movement of the body.--

9,

Please cancel claim 2.

Claim 3, line 1, change "2" to --9--;

line 2, change "in" to --on--.

Claim 5, line 1, change "1" to --9--.

Please cancel claims 7 and 8.

REMARKS

The order granting reexamination and the comments of the Examiner in the decision attached to the order are noted and

appreciated. The claims of the Carroll patent have been amended in a sincere effort to define more clearly and more specifically features of patentee's invention that distinguish over the art of record, including German Gebrauchsmuster No. 1,982,379, which was newly cited by the patent owner in its Request for Reexamination.

Main claim 1 of the Carroll patent has been replaced by new claim 9 submitted herewith for the Examiner's consideration. As will be discussed below, it is respectfully urged that the structure now set forth with particularity in claim 9 is not found in the art of record or in the German Gebrauchsmuster.

New claim 9 sets forth the structure of a device which may be used to transport articles, such as garments or clothing, from one site to another, and thus is particularly useful in the clothing industry where light loads are required to be moved at high speeds (Col. 1, lines 13-16 of the Carroll patent). With reference to a preferred form of the device illustrated by the drawings of the Carroll patent, claim 9 defines the device for moving articles as including a hollow cylinder (for example, cylinder 10 illustrated by Fig. 1) having opposite axial ends, and a piston (for example, piston 18) which is mounted in the interior of the cylinder and which slides back and forth in the cylinder.

Claim 9 specifically defines the piston as including a central mounting member (for example, bolt 21 shown in Fig. 3), a plurality of cylindrically-shaped permanent magnets (for example, magnets 20 shown in Figs. 3 and 5) mounted on the central mounting member, at least one pair of end members (members 22 shown in Fig. 3) mounted on the central mounting member and disposed on opposite axial sides of the plurality of magnets, and a pair of resilient sealing rings (rings 26 shown in Fig. 3) situated near opposite axial ends of the mounting member and engaging the cylinder to provide a fluid-tight seal.

Claim 9 also now more specifically defines the article moving device as including a pair of cushion members formed of resilient material. Such cushion members are illustrated by Fig. 3 of the Carroll patent and described in the patent specification, at Column 4, lines 13-16 thereof. Claim 9 specifically defines the cushion members as being situated near opposite axial ends of the central mounting member (i.e., bolt 21) to help prevent damage to the piston when the piston contacts an axial end of the cylinder.

Claim 9 also specifically defines the article moving device of the Carroll patent as including a body mounted on the exterior of the cylinder and being reciprocatingly slidable on the cylinder. The body is defined as including a plurality of annularly shaped permanent magnets (for example, magnets 28 shown in Figs. 3 and 5) surrounding the cylinder. Claim 9 defines the permanent magnets of the piston and body as being polarized, as shown in Figs. 4 and 5, so as to magnetically couple the body to the piston. Thus, and as set forth in new claim 9, movement of the piston inside the cylinder causes a corresponding movement of the body outside the cylinder.

Claim 9 also defines the body mounted on the cylinder as further including means for holding an article to be moved on the body. Such means can be in the form of the gripping device 30 shown in Fig. 1 of the Carroll patent.

Claim 9 further defines the article moving device of the Carroll patent as including means for controlling the admission of pressure fluid into the cylinder and exhaust fluid from the cylinder for moving the piston in the cylinder. An example of such fluid controlling means is the five part spool valve 40 illustrated by Fig. 1 of the drawings.

As in original claim 1, new claim 9 defines the attractive forces between the permanent magnets of the piston and the body

as being such that movement of the piston causes a corresponding movement of the body below a predetermined load on the body and such that above said predetermined load, movement of the piston does not cause corresponding movement of the body.

It is respectfully urged that the structure now set forth in new claim 9 patentably distinguishes over the references of record in the Carroll patent and newly cited German Gebrauchsmuster No. 1,982,379.

The German patent discloses a device for transporting goods. With reference to Figs. 1 and 2 of the German patent, the device includes a guide cylinder or tube 3 made from a non-magnetic material, a piston 1 which supports an inner magnet 4 and which reciprocatingly slides within the cylinder, and an outer magnet 5 mounted on the outside of the cylinder. The guide cylinder 3 also includes inlets and outlets for receiving and exhausting air or other pressure medium to effect reciprocal movement of the piston within the cylinder. The magnetic attraction between the inner and outer magnets causes the outer magnet to follow the piston in its movement within the cylinder.

It is respectfully urged that the particular structure of the inner piston and outer body now more specifically set forth in new claim 9 is not taught or suggested by the German patent. In particular, claim 9 defines the piston as including a plurality of spaced apart magnets, each in a cylindrical form, and also defines the outer body as including a plurality of spaced apart magnets, each in an annular form, as illustrated by Fig. 5 of the Carroll patent. None of the references cited during prosecution of the Carroll patent discloses the structure of an outer body formed of a plurality of spaced apart annular magnets and a piston formed of spaced apart cylindrical magnets, nor does the German patent disclose this structure. The German patent discloses a single inner magnet 4 and a single outer

magnet 5. The advantage of having not only a plurality of magnets on both the piston and the outer body but also spacing the magnets of the piston and body apart from each other is to increase the magnetic coupling between the two so that heavier loads may be transported by the outer body.

New claim 9 now also more specifically defines the article transport device of the Carroll patent as including cushions of resilient material mounted on the axial ends of the piston. As disclosed at Column 2, lines 13-16 of the Carroll patent specification, and as illustrated by Fig. 3 of the patent, the cushions are provided to prevent damage to the pneumatic device when the piston reaches the ends of the cylinder.

None of the references cited during prosecution of the Carroll patent discloses not only the overall structure of the article transport device set forth in claim 9, but also a pair of resilient cushions mounted on axial ends of a piston that is movable within a cylinder. Similarly, the German patent does not disclose resilient cushions mounted on the ends of piston 1. Accordingly, it would be possible for the piston of the device disclosed in the German patent to be damaged if it struck the closed ends of the cylinder.

In summary, new claim 9, which replaces original claim 1 of the Carroll patent, is respectfully urged to patentably distinguish over the references cited during prosecution of the Carroll patent and to distinguish over the German patent submitted by the patent owner for the Examiner's consideration in that the references and the German patent do not disclose the overall structure of the device for moving articles set forth in the claim, and in particular do not disclose 1) a <u>plurality</u> of cylindrically-shaped permanent magnets mounted on a central mounting member and <u>spaced apart axially from each other,</u> where each magnet has a bore formed axially therethrough for receiving

the central mounting member, 2) an exterior body including a plurality of annularly shaped permanent magnets spaced apart from each other and 3) a pair of cushion members formed of resilient material and situated near opposite axial ends of the central mounting member of the piston to help prevent damage to the piston when the piston contacts an axial end of the cylinder, as specifically set forth in new claim 9 submitted herewith.

Claim 2 of the Carroll patent has been cancelled, as the structure set forth in the claim has now been incorporated into new proposed claim 9.

Claim 3 has been amended so that it now directly depends from new claim 9.

Claim 5 has also been amended so that it now depends from new claim 9.

Claims 7 and 8 have been cancelled, as the structure set forth in these claims has now been incorporated into new proposed claim 9.

It is respectfully urged that the remaining dependent claims, that is, claims 3 through 6, as amended, patentably distinguish over the references cited in the Carroll patent and over the German patent for the reasons submitted above with respect to new main claim 9.

In view of the foregoing amendments and remarks, entry of new main claim 9 and the amendments to claims 3 and 5, and the issuance of a reexamination certificate with claims 3 through 6 and 9 are respectfully solicited.

Respectfully submitted,

Gerald T. Bodner

Gerald T. Bodner
Attorney for Patent Owner
Registration No. 30,449

GTB/cd

CERTIFICATE OF MAILING (37 CFR 1.8a)

I hereby certify that this paper (along with any paper referred to as being attached or enclosed) is being deposited with the United States Postal Service on the date shown below with sufficient postage as first class mail in an envelope addressed to the: Commissioner of Patents and Trademarks, Washington, D.C. 20231.

Claudia Deptula

Date 7/21/88

Claudia Deptula
(Signature of person mailing paper)

UNITED STATES DEPARTMENT OF COMMERCE
Patent and Trademark Office

Address: COMMISSIONER OF PATENTS AND TRADEMARKS
Washington, D.C. 20231

REEXAM CONT NO	FILING DATE	PATENT UNDER REEXAMINATION	ATTORNEY DOCKET NO
90/001,477	03/18/88	PAT NO 3779401	D

GERALD T. BODNER
HOFFMAN & BARON
350 JERICHO TURNPIKE
JERICHO, NY 11753

EXAMINER	
PAPERNER, L	
ART UNIT	PAPER NUMBER
317	7

DATE MAILED: 08/25/88

This is a communication from the examiner in charge of this reexamination.

COMMISSIONER OF PATENTS AND TRADEMARKS

NOTICE OF INTENT TO ISSUE A REEXAMINATION CERTIFICATE AND/OR EXAMINER'S AMENDMENT

1. [X] Examination has been terminated in this reexamination proceeding and a Certificate will be issued in due course in view of:
   a. [X] Owner's communication filed July 25, 1988.
   b. [ ] Owner's late response filed _____.
   c. [ ] Owner's failure to file an appropriate response to the Office action/Notice of Appeal dated _____.
   d. [ ] Other
   The Certificate will indicate the following:
   a. Change in the Specification [ ] Yes [X] No
   b. Change in the Drawings [ ] Yes [X] No
   c. Status in the Claims:
      (1) Patent claims confirmed: _____
      (2) Patent claims amended: 3,4,5,6
      (3) Patent claims cancelled: 1,2,7,8
      (4) New claims allowed: 9
2. [X] Note attached statement of reasons for allowance and/or confirmation. Any comments considered necessary by owner regarding reasons for allowance and/or confirmation must be submitted promptly to avoid processing delays. Such submissions should be clearly labeled, "Comments on Statement of Reasons for Allowance and/or Confirmation."
3. [X] Note attached NOTICE OF REFERENCES CITED, PTO-892, which is part of this communication. The listed references are considered pertinent to the claimed invention, but the claims are deemed to be patentable thereover.
4. [X] Note attached LIST OF PRIOR ART CITED BY OWNER, PTO-1449, which is part of this communication and serves as an acknowledgment of receipt of owner's prior art statement. The references which were considered have been initialed on the form by the examiner and the claims are deemed patentable thereover.
5. [ ] The drawing correction request filed _____ has been [ ] approved. [ ] disapproved.
6. [ ] Acknowledgment is made of the claim for priority under 35 U.S.C. 119. The certified copy has: [ ] been received. [ ] not been received. [ ] been filed in parent application, Serial Number _____ filed on _____.
7. [ ] Note Examiner's Amendment below.
8. [ ] Other

EXAMINER'S AMENDMENT TO THE RECORD

Reasons For Allowance

Claims 3, 4, 5, 6, and 9 are deemed allowable over the prior art of record, including German Patent No. 1,982,379 because the prior art does not teach or render obvious the claimed combination which includes the plurality of magnets, end members, and cushion members in the claimed relationship.

The patent to Brown is cited to show cushion members. Miyamoto shows the basic combination but has a later effective date. The Figure 1 prior art embodiment is that shown in the cited United Kingdom Patent No. 1,317,105 (column 1, lines 21-29) but that patent corresponds to the patent reexamined in this application.

Paperner:vr
(703) 557-3618
8/23/88

LESLIE J. PAPERNER
PRIMARY EXAMINER
ART UNIT 317

G. Baron
8/25/88

U.S. DEPARTMENT OF COMMERCE
PATENT AND TRADEMARK OFFICE

NOTICE OF REFERENCES CITED

SERIAL NO.	GROUP ART UNIT	ATTACHMENT TO PAPER NUMBER
90/001,477	317	7

APPLICANT(S) Carroll

U.S. PATENT DOCUMENTS

*		DOCUMENT NO.	DATE	NAME	CLASS	SUB-CLASS	FILING DATE IF APPROPRIATE
	A	1162562	11/1915	Brown	92	85R	
	B	4488477	12/1984	Miyamoto	91	Dig 4	10/1982
	C						
	D						
	E						
	F						
	G						
	H						
	I						
	J						
	K						

FOREIGN PATENT DOCUMENTS

*		DOCUMENT NO.	DATE	COUNTRY	NAME	CLASS	SUB-CLASS	PERTINENT SHTS. DWG	PERTINENT PP. SPEC.
	L								
	M								
	N								
	O								
	P								
	Q								

OTHER REFERENCES (Including Author, Title, Date, Pertinent Pages, Etc.)

R	
S	
T	
U	

EXAMINER Pagerner

DATE 8/22/88

* A copy of this reference is not being furnished with this office action.
(See Manual of Patent Examining Procedure, section 707.05 (a).)

FORM PTO-122
(REV. 12-87)

U.S. DEPARTMENT OF COMMERCE
PATENT AND TRADEMARK OFFICE

TITLE REPORT

PAPER NO. 8

A. APPLICATION FILE DATA

1. SERIAL NO. 0001477

2. FILED

3. INVENTOR(S)—FULL NAME(S)

George Carroll

4. DIVISION OF

5. CONTINUATION OF

6. REISSUE OF 227,570-3,779,401

7. SUBSTITUTE OF

B. ASSIGNMENT RECORD DATA

The assignment records reveal that the Title appears to be vested in:

- ☐ (1.) Inventor(s)
- ☐ (2.) As endorsed
- ☐ (3.) As the record now stands, the patent, when granted, will issue in the name of the inventor(s).
- ☑ (4.) Other

EXAMINED UP TO AND INCLUDING 08/12/88

THIS CERTIFICATE DATED 11/12/88

BRANCH CHIEF OF ASSIGNMENT SEARCH BRANCH

DIANE G. RUSSELE

N.J.W.

156

FORM PTO-122 (REV. 12-87) — U.S. DEPARTMENT OF COMMERCE, PATENT AND TRADEMARK OFFICE

510

TITLE REPORT

PAPER NO.

A. APPLICATION FILE DATA

1. SERIAL NO. 05/227570 — 2. FILED 2/17/72

3. INVENTOR(S)—FULL NAME(S)

George Carroll

SEP 2 8 100

4. DIVISION OF

5. CONTINUATION OF

6. REISSUE OF

7. SUBSTITUTE OF

B. ASSIGNMENT RECORD DATA

The assignment records reveal that the Title appears to be vested in:

- ☐ (1.) Inventor(s) Document herewith (2)
- ☐ (2.) As endorsed Rec. May 27, 1988
- ☐ (3.) As the record now stands, the patent, when granted, will issue in the name of the inventor(s).
- ☒ (4.) Other Festo KG Esslingen-Berkheim, West-Germany

EXAMINED UP TO AND INCLUDING	THIS CERTIFICATE DATED	
7-19-88		8/9/88

BRANCH CHIEF OF ASSIGNMENT SEARCH BRANCH — DIANE G. RUSSELE

O.R.

PATENT NUMBER: 3779401 ISSUE DATE: 12/18/73
SERIAL NUMBER: 05/227570 FILING DATE: 02/17/72
TITLE: PNEUMATIC DEVICE FOR MOVING ARTICLES
APPLICANT:
REEL: 3951 FRAME: 0494 DATE RECORDED: 03/05/82 NUMBER OF PAGES: 001
ASSIGNOR: CARROLL, GEORGE EXC DATED: 02/01/82
ASSIGNEE: FESTO KG, RUITER STRASSE 82, D-7300 ESSLINGEN-BERKHEIM, WEST -GERMANY
BRIEF: ASSIGNMENT OF ASSIGNORS INTEREST
RETURN ADDRESS: FIDDLER & LEVINE
350 FIFTH AVE.

C. F. BROWN.

PISTON VALVE FOR LIQUID MEASURING APPARATUS.

APPLICATION FILED FEB. 19, 1915.

1,162,562. Patented Nov. 30, 1915.

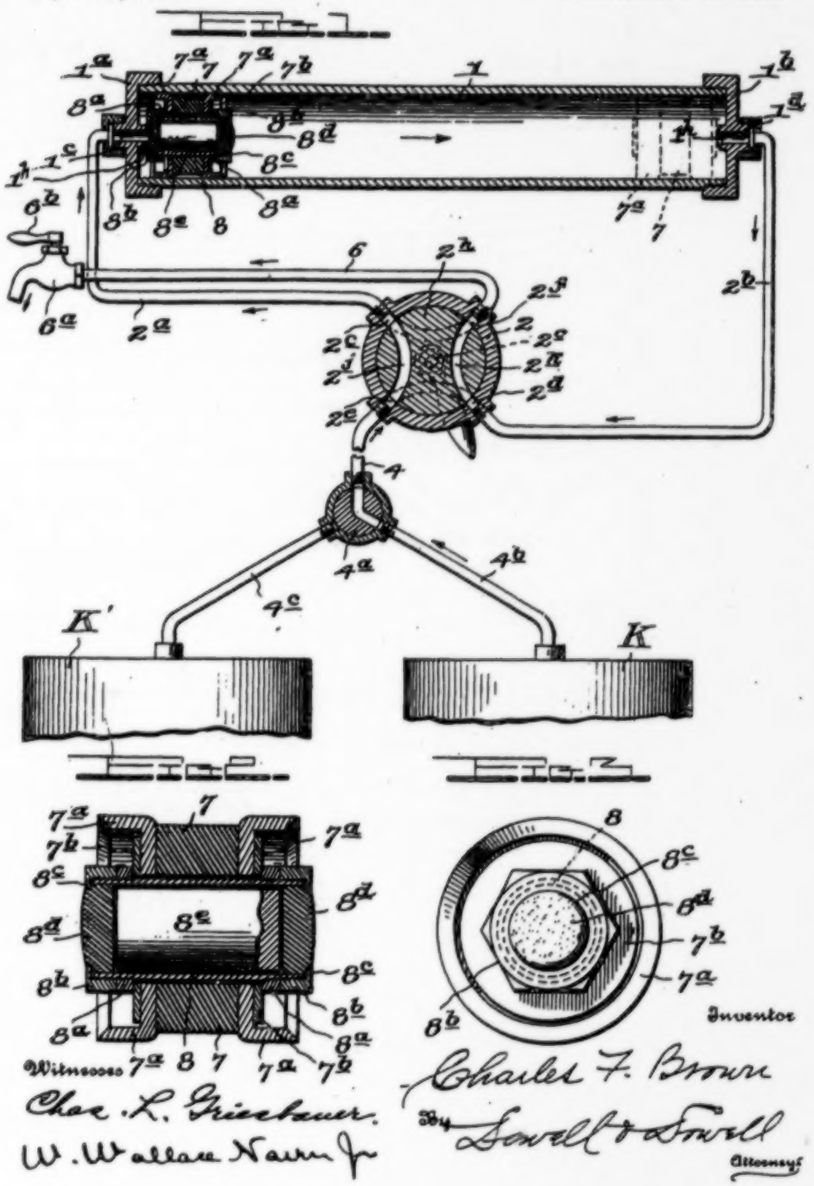

UNITED STATES PATENT OFFICE.

CHARLES F. BROWN, OF NEW YORK, N. Y., ASSIGNOR TO UNIVERSAL LIQUID REGISTER COMPANY, OF NEW YORK, N. Y., A CORPORATION OF NEW YORK.

PISTON-VALVE FOR LIQUID-MEASURING APPARATUS.

1,162,562. Specification of Letters Patent. Patented Nov. 30, 1915.

Application filed February 19, 1915. Serial No. 9,340.

To all whom it may concern:

Be it known that I, CHARLES F. BROWN, a citizen of the United States, residing at New York, in the county of New York and State of New York, have invented certain new and useful Improvements in Piston-Valves for Liquid-Measuring Apparatus; and I hereby declare that the following is a full, clear, and exact description thereof, reference being had to the accompanying drawings, which form part of this specification.

This invention is a novel improvement in the pistons of liquid measuring apparatus of the type shown in my application for patent Serial No. 807,911, filed December 20, 1913; such apparatus comprising essentially a preferably cylindrical vessel and means whereby liquid can be admitted into either end of the vessel as it is being withdrawn from the other, direct communication within the vessel between the opposite ends thereof being cut off by means of a piston which moves back and forth in the vessel according to the flow of fluid therein.

The present invention has especial relation to such pistons, and its object is to construct such pistons so that they will effectually prevent communication between the interior portions of the vessel at opposite sides of the piston and prevent leakage of fluid therepast, and will also close the outlet ports in the ends of the vessel when they reach the ends of the vessel.

I will describe the invention in connection with the accompanying drawings in which—

Figure 1 represents a diagrammatical sectional elevation of a measuring apparatus with my novel piston therein. Fig. 2 is an enlarged sectional view of the piston detached. Fig. 3 is an end view of the piston.

The measuring apparatus comprises a preferably cylindrical vessel 1, closed at its ends by heads 1^a and 1^b; head 1^a being provided with a central port 1^c, and head 1^b with a central port 1^d, to which ports are connected pipes 2^a, 2^b, which are respectively connected at their outer ends to ports 2^c, 2^d, of a four-way valve casing 2 which is also provided with a port 2^e communicating with a supply pipe 4; and with a port 2^f communicating with a pipe 6 connected to a dispensing faucet 6^a which can be operated manually by a handle 6^b.

In the valve casing 2 is a valve 2^h having a stem 2^i to which is connected a handle by which the valve can be manually operated. The valve 2^h has two transverse ports 2^j, 2^k which are so formed that when the valve is in one position port 2^j will establish communication between the ports 2^e and 2^c; and simultaneously port 2^k will establish communication between the ports 2^d and 2^f (as illustrated in full lines in Fig. 1.) By turning the valve to the position indicated in dotted lines in Fig. 1, port 2^j will establish communication between the ports 2^e and 2^f; and port 2^k will establish communication between the ports 2^c and 2^d. The pipe 4 communicates with a supply valve 4^a which preferably has two inlet ports connected by pipes 4^b, 4^c to two containers K, K'; and by properly shifting valve 4^a communication can be established alternately between the pipe 4 and either container K or K'.

The vessel 1 is made of such size that it will contain a predetermined quantity of liquid, say one pint or one quart, and the introduction of such a quantity of liquid into the cylinder will force the piston to one end thereof.

The parts thus far described are similar to those shown and described in my aforesaid application.

Within the vessel 1 is a novel piston which is movable longitudinally of the cylinder and is adapted to be moved by the liquid admitted into the cylinder as hereinafter explained. This piston forms the subject-matter of the present invention and is constructed as follows: An annular body 7, preferably made of hard rubber and slightly less in external diameter than the interior of the vessel 1, is interposed between oppositely facing cup leathers or washers 7^a whose peripheral flanges are adapted to fit closely against the circular inner wall of the vessel 1. The body and cup washers are strung upon an axial member 8, which is preferably tubular and is exteriorly threaded on its outer ends for engagement of nuts 8^a which clamp the cup leathers firmly against the body; flat ring washers 7^b are preferably strung on the axial member 8 between the nuts 8^a and the washers. Detachably attached to the ends of the axial member 8 are cushions 8^d, preferably formed of rubber or other suitable yieldable or resilient material. These cushions 8^d may be spaced apart by a

filler 8ᵉ within the sleeve 8 and are secured in position by means of nuts 8ᵇ screwed on the member 8 and provided with inwardly projecting flanges 8ᶜ on their outer ends whose internal diameter is slightly larger than the external diameter of the nipples 1ᵇ surrounding the inner ends of the ports 1ᶜ, 1ᵈ of the vessel.

The operation of the apparatus is as follows: If the valve 2ᵇ is in the position shown in Fig. 1, and the faucet 6ᵃ be opened; liquid will flow from the container K through pipe 4ᵇ, valve 4ᵃ, pipe 4, port 2ᶠ, pipe 2ᵃ and port 1ᶜ into the vessel 1, and the liquid will force the piston 7 in said vessel toward the head 1ᵇ thereof; and at the same time the liquid contained in the vessel between the piston 7 and head 1ᵇ will be discharged through the port 1ᵈ, pipe 2ᵇ, port 2ᵉ, pipe 6, and faucet 6ᵃ. When the piston 7 moves against the head 1ᵇ (as indicated in dotted lines in Fig. 1) its cushion 8ᵈ closes the port 1ᵈ and no more liquid escapes through the faucet; and no more liquid can enter the measuring vessel 1 through port 1ᵇ. When no more liquid escapes through the pipe 6, valve 2ᵇ may be shifted so as to establish communication between pipes 4 and 2ᵇ; and between pipes 2ᵃ and 6 (as indicated in dotted lines in Fig. 1,) and then if the faucet 6ᵃ be opened, liquid will flow from the supply through pipes 4 and 2ᵇ into the vessel 1 through port 1ᵈ and force piston 7 to the left; and liquid will be discharged through the port 1ᶜ and pipes 2ᵃ and 6 until the piston reaches the head 1ᵃ of the vessel, and port 1ᶜ is closed by the adjacent cushion 8ᵈ on the piston 7; then no more liquid will escape through pipe 6, until the valve 2ᵇ is again shifted to the position shown in full lines in Fig. 1. By shifting the valve 2ᵇ communication is established alternately between the supply and the opposite ends of the vessel 1, and between the opposite ends of said vessel and the faucet; but at no time can direct communication be established between the supply and the faucet.

It will be seen that when pressure is brought to bear against the cup leathers from either end of the vessel it presses the lips or flanges of such cup leathers outward against the walls of the vessel, and the harder the pressure the more certainly will the piston eliminate the air or gas in the vessel, and prevent passage of gas or liquid past the piston from one end of the vessel to the other. My piston overcomes the difficulties which have been experienced with the pistons formerly used in such vessels, owing to the fact that the drawn tubing (from which the vessel is ordinarily made) will always vary somewhat in diameter owing to uneven contraction in cooling off. But by the use of my piston an even measure is always delivered from each end of the vessel. The flanged nuts 8ᵇ hold the cushions 8ᵈ [illegible] against the ends of the filler block 8ᵉ in the axial member 8, thus insuring that the cushions will perfectly seal the ports in the ends of the cylinder. When the filler 8ᵉ is loosely fitted in the member 8 it permits pressure to be transmitted directly through the filler from one cushion to the other.

The cup leathers preferably have lips of about one-half inch in length and will last for years without replacing same, as they will wear principally from the ends, whereas a flat washer placed around the circumference of a piston head will wear off and become smaller by the constant friction and will require frequent replacing.

What I claim is:

1. A piston comprising a tubular axial member, an annular body strung on said member, oppositely facing cup leathers on said axial member at opposite sides of the body member, and resilient cushions detachably attached to opposite ends of the axial member.

2. A piston comprising a tubular axial member having threaded ends, an annular body strung on said axial member, oppositely facing cup leathers on said axial member at opposite sides of the body, resilient cushions at opposite ends of the axial member, flanged nuts screwed on the ends of the body member and holding said cushions in position, and a filler in the tubular axial member interposed between said cushions.

3. A piston for the purpose specified, comprising an axial member, a body member on said axial member, oppositely facing cup leathers strung on said axial member at opposite sides of the body member, means on the axial member for clamping the cup leathers to the body member, cushion members at the opposite ends of the axial member, and annular flanged nuts screwed on the ends of the axial member and holding said cushion members in position, substantially as described.

In testimony that I claim the foregoing as my own, I affix my signature in presence of two witnesses.

CHARLES F. BROWN.

Witnesses:
PATK. CONNOLLY,
GUSTAVE VAN BOWBRAEBEN.

Aug. 10, 1948. D. W. MacLEOD ET AL 2,446,657

INDICATOR FOR RUBBER MIXERS OR THE LIKE

Filed Sept. 26, 1947 2 Sheets-Sheet 1

Fig. 1.

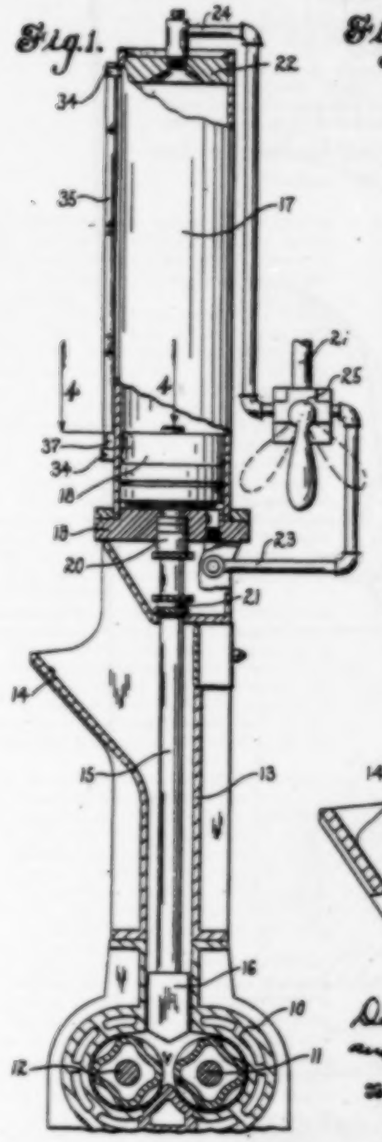

Fig. 2.

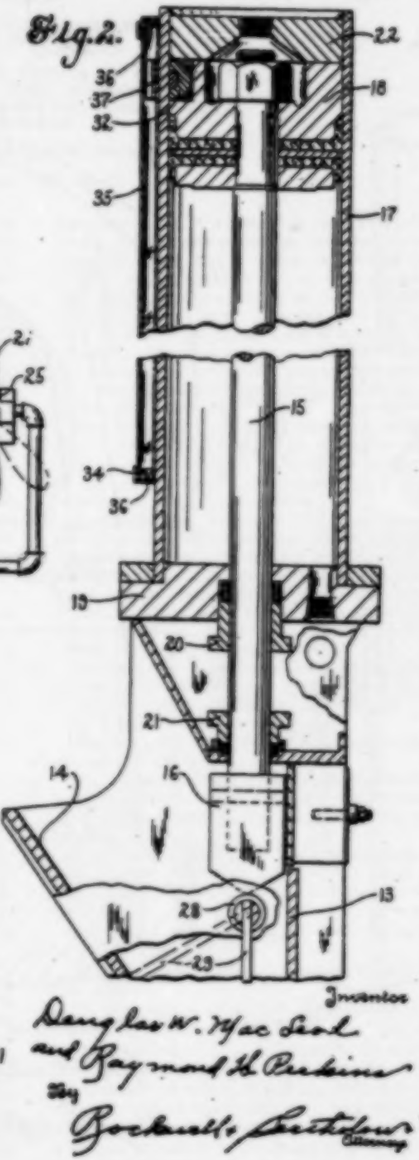

Inventor
Douglas W. MacLeod
and Raymond H. Perkins
By
Rockwell & Rockwell
Attorneys

Aug. 10, 1948. D. W. MacLEOD ET AL. 2,446,657

INDICATOR FOR RUBBER MIXERS OR THE LIKE

Filed Sept. 26, 1947 2 Sheets-Sheet 2

Fig. 3.

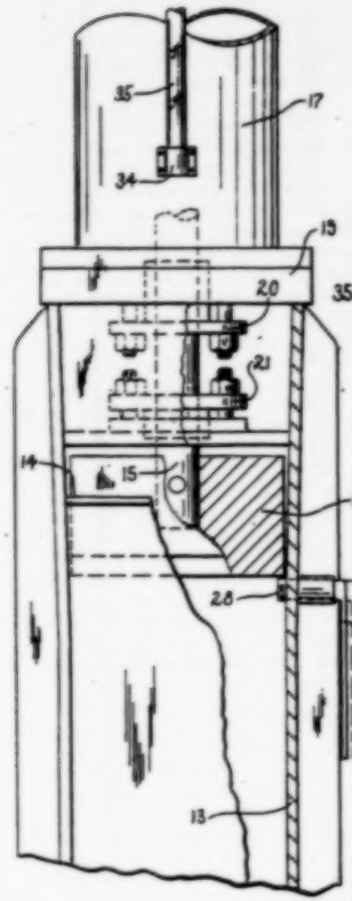

Fig. 4.

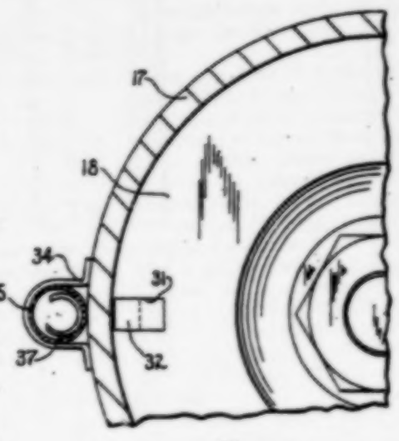

Fig. 5.

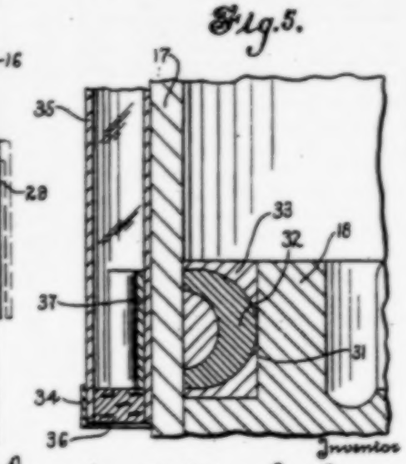

Inventor

Douglas W. MacLeod
and Raymond H. Perkins

By

Rockwell & Barthelow

Attorneys

Patented Aug. 10, 1948 2,446,657

UNITED STATES PATENT OFFICE

2,446,657

INDICATOR FOR RUBBER MIXERS OR THE LIKE

Douglas W. MacLeod, Ansonia, and Raymond H. Perkins, Milford, Conn., assignors to Farrel-Birmingham Company, Inc., Ansonia, Conn., a corporation of Connecticut

Application September 26, 1947, Serial No. 776,182

7 Claims. (Cl. 18—2)

1

This invention relates to indicators for pistons or plungers, and more particularly to a device which will indicate the position of the piston or plunger of a machine, such as a rubber masticator, for example.

In machines where there is employed a piston or plunger operated by fluid pressure, it is very often desirable for the operator to know the position of the plunger at any time. As the plunger is operated by fluid pressure, the cylinder within which the piston or plunger operates must be made of material which will withstand the pressure which it is necessary to employ, and, for this reason, it is often impossible to make the cylinder of transparent material. It is, therefore, impossible for the operator to know the position of the plunger, and it is many times impracticable to arrange for a part of the plunger or an indicator on the plunger to project through the cylinder or other part of the device to give an indication of its position.

It is contemplated by the present invention to indicate the position of the piston or plunger magnetically, and to effect this result the piston is made of non-magnetic material, and a permanent magnet is attached to, or incorporated in, the piston, which magnet is of sufficient strength to act through the wall of the cylinder upon a follower or the like disposed at the outside of the cylinder.

As shown in the present application, the cylinder is also made of non-magnetic material, and upon the outer wall of this cylinder is secured a transparent tube extending longitudinally of the cylinder. Within this tube is disposed a freely slidable follower of magnetic material of light weight, so that it will be attracted by the magnet and move along the tube with the piston, thus indicating the position of the latter at all times to the operator of the machine.

Although capable of other application, the indicating device is shown in the present instance as being applied to the plunger or piston of a rubber masticator. A machine of this character is provided with a chamber within which the masticator rotors are mounted, and a charging stack is positioned above the chamber through which the material to be acted upon by the rotors is fed into the chamber. Slidably mounted in this charging stack is a weight or closure member designed to be moved upwardly to a position to permit the charging of the material into the chamber, and, after the latter has been charged, to be moved downwardly to maintain pressure upon the charge while it is being acted upon by

2

the rotors. To this weight is secured a plunger which extends into a cylinder mounted above the charging stack and a piston is secured to the plunger within the cylinder, so that the plunger and weight may be operated by fluid pressure admitted to the cylinder in order that the weight may be held downwardly upon the charge under pressure. The indicator is mounted upon the outside of the cylinder and arranged to be moved by a magnet which is, in this instance, mounted in the piston itself.

One object of the present invention is to provide a mechanically-operated piston or plunger with an indicator which will indicate the position of the piston upon the outside of the cylinder within which the piston moves.

A still further object of the invention is to provide a machine, such as a rubber masticator, for example, with an indicator to indicate the position of the plunger or weight in the charging stack, the indicator being positioned without the cylinder within which the plunger-operating piston is mounted, and being arranged to be operated by movements of the piston.

To these and other ends the invention consists in the novel features and combinations of parts to be hereinafter described and claimed.

In the accompanying drawings:

Fig. 1 is a sectional view of a rubber masticator embodying our invention;

Fig. 2 is an enlarged sectional view of the upper portion of the charging stack and cylinder mounted thereon showing the plunger in its raised position;

Fig. 3 is a fragmentary front elevational view of the upper portion of the charging stack, some parts being broken away for the sake of clearness;

Fig. 4 is a partial sectional view on line 4—4 of Fig. 1; and

Fig. 5 is a partial vertical sectional view through the piston.

To illustrate a preferred embodiment of our invention, we have shown in Fig. 1 of the drawings a machine, such as a rubber mixer or masticator, the machine embodying a double cylindrical chamber 10 within which are mounted bladed rotors 11 and 12 which cooperate in a well-known way to mix, masticate, and reduce to plastic form, a charge of rubber or other material which may be introduced into the chamber. It will be understood that, while a double rotor machine is shown, our improvements may be employed in connection with a rubber masticator having a

single rotor, and may likewise be employed with types of machines other than masticators.

Above the chamber is mounted the charging stack 13 through which the charge may be introduced into the chamber, this stack being provided with a charging opening 14. Slidably mounted in the stack is a piston rod or plunger 15 to the lower end of which is secured a weight or closure member 16, this weight being adapted, during the operation of the device, to rest upon the charge within the chamber and exert pressure thereon. It, of course, also acts to force into the chamber the material introduced into the charging stack through the opening 14.

Mounted above the charging stack is a cylinder 17, and the plunger or piston rod 15 extends into this cylinder, and secured to its upper end is the piston 18 slidably mounted within the cylinder. The lower end of the cylinder is closed by the head 19, and the piston rod passes through a packing gland 20 secured in the head 19 and also through a gland 21 secured in a portion of the upper end of the stack.

The upper end of the cylinder is closed by the head 22, and pressure fluid is introduced above and below the piston 18 through the lines 23 and 24, which lead from a suitable valve 25 controlling the introduction of fluid pressure into one or the other of the lines 23 and 24 from the line 26 leading to a source of supply. It will, of course, be obvious that, when pressure fluid is introduced to the line 23 below the piston, the weight 16 will be caused to rise, and, when fluid pressure is introduced into the cylinder through the line 24 above the piston, the weight will be caused to descend and exert pressure on the charge in the usual manner.

The upper and lower positions of the weight 16 are determined by the upper and lower heads of the cylinder, and this weight may be held in its upper position, as shown in Fig. 3, by a stop 27 mounted in the wall of the stack and manipulated to or from engagement with the weight by the handle 28.

In order to provide indicating means upon the outside of the cylinder 17, the piston 18 is composed of non-magnetic material, such as brass, for example, and in a recess 31 adjacent the periphery of the piston is mounted a permanent magnet 32 of some material which can be strongly magnetized, such, for example, as the metal "alnico." As shown, this magnet is of semi-cylindrical form, so as to present two poles at the exterior of the piston adjacent the wall of the cylinder. The magnet may be held in place by solder or the like 33.

The cylinder wall is also made of non-magnetic material, preferably some type of non-magnetic metal, as it must be sufficiently strong to withstand the high pressure of the pressure fluid used therein. Secured upon the outside of the cylinder by clips or the like 34 is a tube 35 of transparent material, such as transparent plastic, for example, the upper and lower ends of this tube being closed by plugs 36. Within this tube is mounted a follower 37 of magnetic material, this follower being, as shown, in the form of a hollow semi-cylindrical body, so that it will slide freely upwardly and downwardly in the tube 35 and, at the same time, be of relatively light weight, so that it will be attracted by the magnet 32 and be carried with the movements of the piston. It will be apparent that, as the piston moves within the cylinder 17, the indicator 37 will also move within the tube 35 and will at once indicate to the

operator through the transparent tube the position of the piston and, therefore, the position of the weight 16.

In the case of some operations, such as the mastication of rubber, for example, the chamber may be charged with lumps of rubber which, when the operation is first begun, will remain in the charging stack 13. During the operation of the machine, the level of the charge will rise and fall to a considerable extent under the pressure of the rotor blades and cause the weight to reciprocate within the stack. The amount of these oscillations or reciprocations will be indicated by the follower 37. When, however, the charge is reduced to plastic form, it will be contained wholly or largely within the chamber 10, and the weight 11 will be moved to its lower position which will also be indicated by the follower. Thus the action of the follower will indicate to the operator the condition of the mass being treated within the chamber.

While we have shown and described a preferred embodiment of our invention, it will be understood that it is not to be limited to all of the details shown, but is capable of modification and variation within the spirit of the invention and within the scope of the claims.

What we claim is:

1. In a mixing or masticating machine, a chamber having an opening, a cylinder supported above the chamber, a piston in the cylinder, a weight connected to the piston and adapted to extend into said opening, a magnet carried by the piston and having pole portions substantially flush with the outer surface thereof, and a follower of magnetic material disposed at the outside of the cylinder and adapted to be moved therealong by said magnet.

2. In a device of the class described, a chamber, a cylinder, a pressure-fluid-operated piston therein, a plunger connected to the piston and extending toward the chamber, means to indicate the position of the piston in the cylinder comprising a magnet carried by the piston and having pole portions substantially flush with the outer surface thereof, a follower disposed on the outside of the cylinder wall and adapted to be moved by said magnet, and a guide tube on the cylinder within which the follower is mounted.

3. In a device of the class described, a machine having a piston-operated member and including a cylinder and a piston therein connected to said member, means to indicate the position of the piston comprising a magnet embedded in the piston and exposed at the lateral face of the piston adjacent the inner surface of the cylinder wall, a guide member on the outside of the cylinder wall and extending longitudinally thereof, and a follower freely movable in said guide member and adapted to be moved by said magnet as the piston is moved.

4. A machine for treating plastic material comprising a chamber, a piston rod extending into the chamber, an element on said rod exerting pressure on the material in the chamber, a piston connected to said rod, a cylinder within which said piston operates, means for introducing fluid pressure into the cylinder, a magnet embedded in the piston and having pole portions exposed at the lateral face of the piston, and a follower of magnetic material slidably mounted on the outside of the cylinder and adapted to be moved by the magnet.

5. A rubber masticating machine comprising a chamber, a charging stack communicating

with the chamber, a weight slidably mounted in said stack, a cylinder supported upon the stack, a piston within the cylinder connected to said weight to move the same, means for introducing fluid pressure into the cylinder to move the piston, a permanent magnet embedded in the piston and having opposite pole portions exposed at the lateral face of the piston, an indicating means mounted upon the outside of the cylinder, said means comprising a follower of magnetic material adapted to be moved by said magnet, and guide means to maintain said follower against the cylinder wall.

6. A rubber masticating machine comprising a chamber, a charging stack communicating with the chamber, a weight slidably mounted in said stack, a cylinder supported upon the stack, a piston within the cylinder connected to said weight to move the same, means for introducing fluid pressure into the cylinder to move the piston, a permanent magnet embedded in the piston and exposed at the lateral surface thereof, an indicating means mounted upon the outside of the cylinder, said means comprising a follower of magnetic material adapted to be moved by said magnet, and guide means to maintain said follower against the cylinder wall, said guide means comprising a tubular member of transparent material within which the follower is mounted.

7. A rubber masticating machine comprising

a chamber, a charging stack communicating with the chamber, a weight slidably mounted in said stack, a cylinder supported upon the stack, a piston within the cylinder connected to said weight to move the same, means for introducing fluid pressure into the cylinder to move the piston, a permanent magnet carried by the piston, an indicating means mounted upon the outside of the cylinder, said means comprising a follower of magnetic material adapted to be moved by said magnet, and guide means to maintain said follower against the cylinder wall, said follower comprising an element of hollow semi-cylindrical form, and said magnet being of semi-cylindrical form and presenting opposite poles substantially flush with the lateral surface of the piston.

DOUGLAS W. MacLEOD.
RAYMOND H. PERKINS.

REFERENCES CITED

The following references are of record in the file of this patent:

UNITED STATES PATENTS

Number	Name	Date
967,082	Nash	May 3, 1910
1,216,261	Ashley	Feb. 20, 1917
1,279,824	Banbury	Sept. 24, 1918

Aug. 15, 1961 E. L. HUTTO 2,996,330

REMOTELY OPERATED MANIPULATOR

Filed Nov. 12, 1959

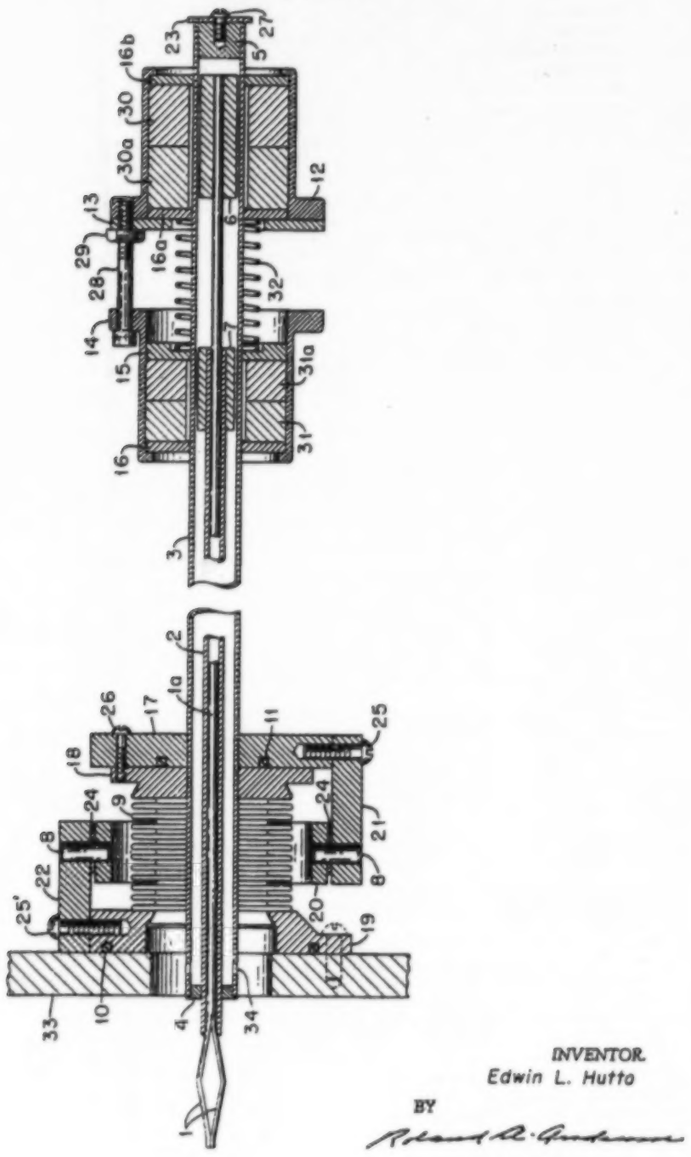

INVENTOR.
Edwin L. Hutto

BY

ATTORNEY

United States Patent Office 2,996,330 Patented Aug. 15, 1961

2,996,330

REMOTELY OPERATED MANIPULATOR

Edwin L. Hutto, Oak Ridge, Tenn., assignor to the United States of America as represented by the United States Atomic Energy Commission

Filed Nov. 12, 1959, Ser. No. 852,583
2 Claims. (Cl. 294—88)

This invention relates to a means for performing, within an entirely enclosed cell containing radioactive materials, various mechanical operations—specifically the transfer of radioactive samples from carrier to sampler and the opening of the same for analysis of the contents thereof.

Many manipulators, both simple and complex, have been developed in the prior art for accomplishing various operations with the isolated cells wherein radioactive materials are processed. Some of these manipulators have been mechanical, others pneumatic or hydraulic, still others electrical, and more often a mixture of these basic manipulating means have been used. Typical of these are the type which utilize a pantograph type of operation over the top of a wall of the cells to duplicate inside the cell the movements performed outside. This necessitates an opening in the cell. Another type uses a plurality of endless belts to transmit the motion. This also necessitates an opening into the cell.

A large proportion of the other prior art manipulators also require some opening into the cell through which some mechanical portion of the motion is accomplished. If these openings are placed so as to prevent radiations from penetrating the same, such manipulators are useful for most radioactive materials. However, when the radioactive materials are volatile or are easily scattered, as in the case of plutonium, the cell must be completely closed, thus obviating the use of many of the prior art manipulators.

Some prior art manipulators are electro-mechanical and require no openings through the cell wall, such as disclosed in U.S. Patent No. 2,476,249. However, they are too complex for small operations. It is desirable to provide a relatively inexpensive and simple manipulator for use in a completely enclosed cell.

With a knowledge of the complexity of the prior art manipulators for use with enclosed cells, it is a primary object of this invention to provide a simple and inexpensive manipulator wherein the "driver" is positioned outside a hot cell and the "slave" or driven portion is within the cell, and the cell is maintained airtight.

It is another object of this invention to provide a manipulator with a minimum of movable parts, which is simple to operate, and which is essentially leak free.

These and other objects and advantages of this invention will become apparent from a consideration of the following detailed specification and the accompanying drawing, wherein:

The single figure is a cross sectional view of the manipulator designed to accomplish the above stated objects.

The above objects have been accomplished in the present invention by providing a rod which is slidable within a tubular sleeve. The rod has a pair of fingers affixed thereto which may be separated by relative movement between the rod and sleeve. The rod and sleeve are enclosed in a tubular member, the rod being longer than the sleeve. A magnetic follower of magnetizable material is affixed to the end of the sleeve that extends out of the cell, and another magnetic follower is affixed to the end of the rod. A permanent magnet is enclosed in a sleeve member which slides on the tubular member and the magnet is disposed adjacent to the magnetic follower fixed to the sleeve. Another permanent magnet is enclosed in another sleeve member slidable on the tubular member and the other magnet is disposed adjacent to the magnetic follower fixed to the rod. The respective sleeve members are held in a fixed position with respect to each other by a compression spring so as to normally hold the fingers on the cell end of the rod closed. The sleeve members may be moved toward each other to impart relative motion between the rod and sleeve to thus open the fingers. When the sleeve members are moved as a unit, the rod and sleeve may be moved in an axial direction, or be rotated about their axis by the action of the magnets upon the magnetic followers. The tubular member enclosing said rod and sleeve is sealed to an opening in the cell by means of a flexible bellows in such a manner that additional motion may be imparted to the fingers in at least two planes.

Refer now to the drawing, which illustrates one embodiment in which the principles of this invention may be carried out. A central rod 1*a* extends centrally through the entire unit and terminates in formed tong fingers 1, which extend through a hole in one wall 33 of the cell. Encircling the rod 1*a* is a guide tube 2, and spaced coaxially therefrom is a closure tube 3. A bushing 4 closes one end of the annulus between the guide tube 2 and closure tube 3, and serves as a bearing for the guide tube 2. A plurality of openings 34 are provided in closure tube 3 adjacent to bushing 4 to provide for movement of air into and out of tube 3 to allow freedom of movement of rod 1*a* and guide tube 2 within tube 3. The outer end of the closure tube 3 is made airtight by a plug 5 inserted therein. The rod 1*a* is longer than the guide tube 2 and extends beyond the outer end thereof. A cylindrical soft iron magnet core 6 surrounds, and is attached to, the outer end of rod 1*a*. A similar core 7 surrounds, and is attached to, the outer end of guide tube 2.

An airtight and yet flexible connection between the closure tube 3 and cell wall 33 is provided by a multiconvolution bellows 9. One end of the bellows is sealed by brazing to an adaptor plate 19 which, in turn, is removably fastened to the cell wall 33. An O-ring 10 provides a seal between plate 19 and wall 33. The other end of the bellows 9 is sealed by brazing to an adaptor ring 18. This ring 18 is removably secured to a terminal plate 17 by screws 26, only one of which is shown. Plate 17 is sealed by brazing to the outer surface of the closure tube 3. A seal between ring 18 and plate 17 is provided by an O-ring 11.

In order to eliminate undue strain on the bellows 9, a gimbal-like structure is provided by a ring 20 surrounding the bellows 9. Ring 20 is supported on four pins 8, two of which, in turn, mate through washers 24 into a pair of blocks 21, only one of which is shown, attached to terminal plate 17 by screws 25. The other two pins 8 mate through washers 24 into a pair of blocks 22, only one of which is shown, attached to adaptor plate 19 by screws 25'. Thus the enclosure tube 3 may be non-rotatably pivoted about a point in the center of ring 20 to provide side-to-side and up-and-down motion, or a combination thereof, of the tong fingers 1.

Rotary and axial motion of the tong fingers 1, as well as opening and closing of the fingers 1, is accomplished by movement of at least a portion or all of four circular magnets 31, 31*a* and 30, 30*a*, which encircle the outer extremity of closure tube 3. The magnets 30, 30*a* are enclosed in a sleeve 12 and restrained therein with a pair of washers 16*a*, 16*b*. A plate 13 completes the housing. The magnets 31, 31*a* are enclosed in a similar sleeve 14 and are restrained therein with washers 15, 16. A repulsive force is applied between the magnet assemblies by a spring 32. The maximum separation of the assemblies is established by a plurality of adjustable in-

dexing studs 28, only one of which is shown. Studs 28 pass through sleeve member 14 and threadably engage sleeve member 12. Lock nuts 29 are provided to prevent studs 28 from rotating once they have been adjusted to provide the desired spacing between the magnet assemblies.

The magnet assemblies are slidable along the enclosure tube 3 but are prevented from disengagement therewith by a washer 23 releasably secured to the plug 5 by a screw 27. It can be seen in the figure that the maximum spacing between the magnet assemblies is chosen so that they respectively encircle the magnetic core 6 attached to the rod 1*a* and the magnetic core 7 attached to the guide tube 2. The value of this maximum spacing is chosen to cause the tong rod 1*a* to be drawn into the guide tube 2 to a maximum distance so as to close fingers 1. The fingers 1 may then be opened by moving the magnet assemblies, and thus the magnetic cores 6, 7 toward each other so as to move the tong rod 1*a* axially within guide tube 2.

The tong fingers may be moved further into the cell by movement of the entire magnet assembly toward the cell wall 33, and withdrawn by movement of the entire magnet assembly in the reverse direction. The tong fingers may be rotated about the axis of the tong rod 1*a* by rotating the magnet assemblies about the axis of the closure tube 3. Also, as discussed above, limited up-and-down and side-to-side motion of the tong fingers 1 may be made by movement of the closure tube 3 in those planes. It may thus be seen that the above manipulator may be moved with little limitation without the use of sliding or rotating seals, since the rod 1*a*, sleeve 2, and the magnetic cores 6, 7 are sealed within closure tube 3 so that the problems of leaks are essentially eliminated.

This invention has been described by way of illustration rather than limitation and it should be apparent that other changes in the arrangement of the various parts of my invention as shown and described may be resorted to without departing from the spirit of the invention or the scope of the appended claims.

What is claimed is:

1. An improved remotely operated manipulator for use in an enclosed cell provided with a manipulator opening and containing radioactive materials, comprising an elongated rod provided with fingers on one end, a sleeve shorter than and slidably fitted on said rod, a tubular member enclosing said rod and its sleeve and coaxially spaced therefrom, a bushing positioned in one end of said tubular member, said bushing having a central opening which acts as a sliding bearing for said sleeve, a plug disposed in the other end of said tubular member, means for supporting and for flexibly sealing said one end of said tubular member within said opening in said cell, said fingers and a portion of said rod and one end of said sleeve extending into said cell, a first magnetic follower affixed to the other end of said rod, a second magnetic follower affixed to the other end of said sleeve, a first sleeve member slidable upon said tubular member, a first permanent magnet disposed in said first sleeve member and positioned in a magnetic coupling relation to said first magnetic follower, a second sleeve member slidable upon said tubular member, a second permanent magnet disposed in said second sleeve member and positioned in a magnetic coupling relation to said second magnetic follower, means for coupling said sleeve members together, said coupling including resilient means disposed between said sleeve members, said resilient means acting in cooperation with said magnetic couplings for urging said sleeve against the base ends of said fingers to hold them closed, said resilient means adapted to be compressed by movement of said sleeve members toward each other to effect relative movement between said rod and sleeve by means of said magnetic couplings to thereby open said fingers, said rod and sleeve being manually movable in unison along the axis and rotatable about the axis of said rod relative to said tubular member by action of said magnets upon said followers to thereby effect movement of said manipulator to a plurality of selected longitudinal and axial positions.

2. The manipulator set forth in claim 1, wherein a third permanent magnet is disposed in said first sleeve member and in a magnetic coupling relation to said first magnetic follower, and a fourth permanent magnet is disposed in said second sleeve member and in a magnetic coupling relation to said second magnetic follower.

References Cited in the file of this patent

UNITED STATES PATENTS

892,162	Kennedy	June 30, 1908
2,290,226	Du Mond	July 21, 1942
2,320,967	Dunkelberger	June 1, 1943
2,405,127	Beach	Aug. 6, 1946
2,595,134	Gordon	Apr. 29, 1952
2,659,569	Ehlke	Nov. 17, 1953
2,665,789	Ingersoll	Jan. 12, 1954
2,697,356	Knudsen	Dec. 21, 1954
2,719,485	Bendar	Oct. 4, 1955
2,752,625	Ponsell	July 3, 1956

Feb. 2, 1965 A. F. GALLISTEL 3,168,203

MANUALLY OPERATED HYDRAULIC ACTUATOR CONTROL HAVING FEEL-BACK

Filed July 7, 1960 2 Sheets-Sheet 1

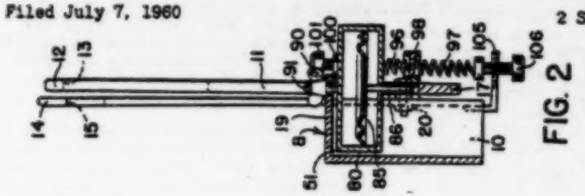

FIG. 2

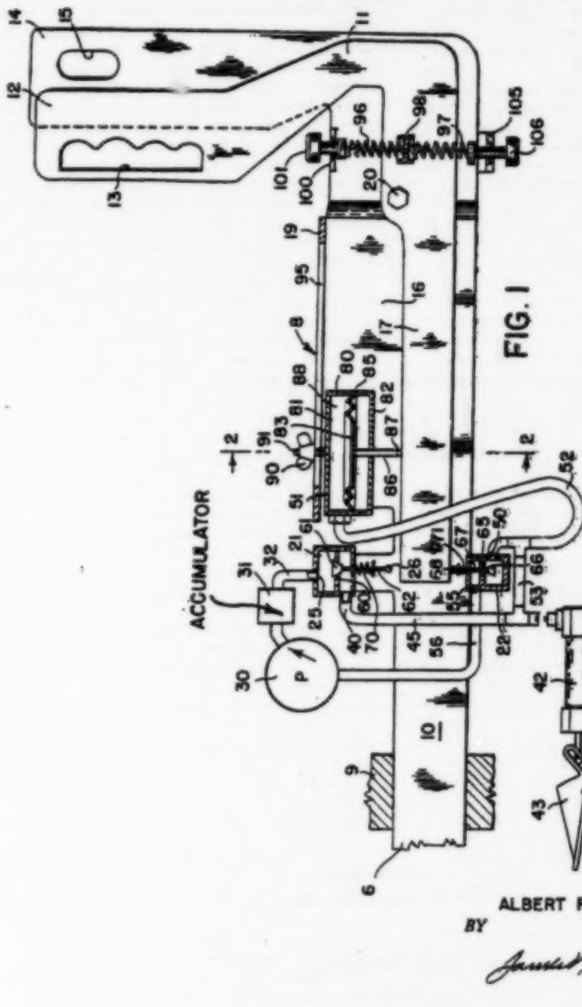

FIG. 1

Feb. 2, 1965 A. F. GALLISTEL 3,168,203

MANUALLY OPERATED HYDRAULIC ACTUATOR CONTROL HAVING FEEL-BACK

Filed July 7, 1960 2 Sheets-Sheet 2

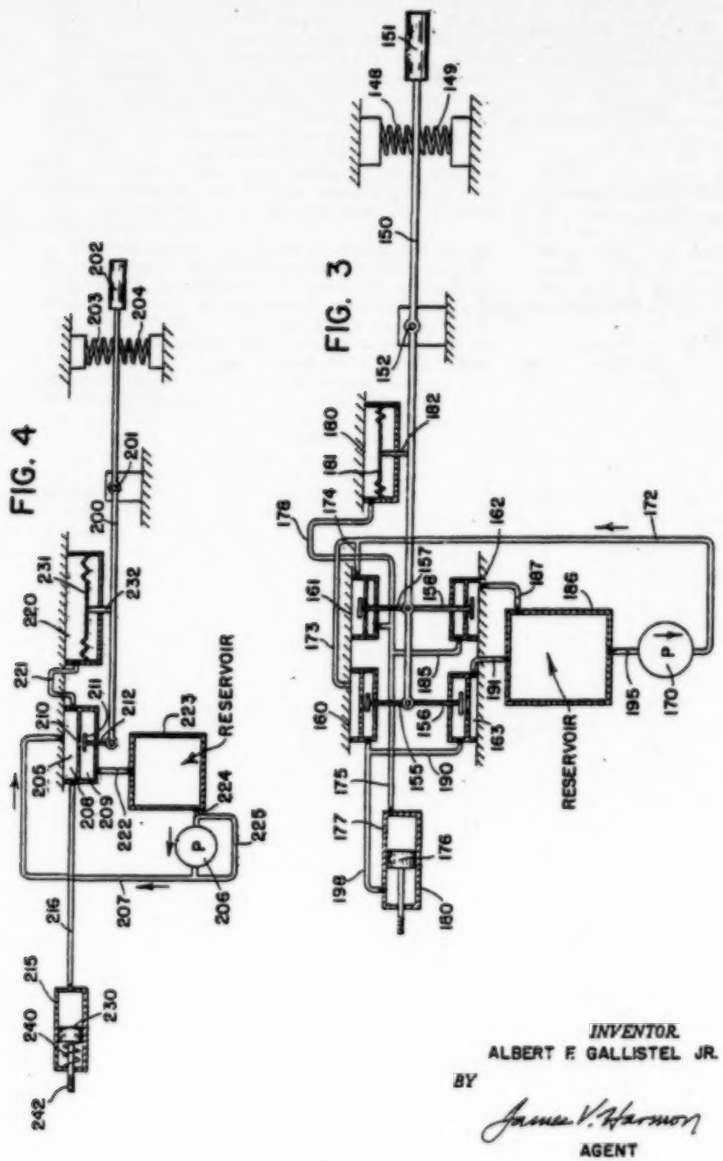

INVENTOR.
ALBERT F. GALLISTEL JR.
BY
James V. Harmon
AGENT

United States Patent Office 3,168,203 Patented Feb. 2, 1965

3,168,203

MANUALLY OPERATED HYDRAULIC ACTUATOR CONTROL HAVING FEEL-BACK

Albert F. Gallistel, Wayzata, Minn., assignor to General Mills, Inc., a corporation of Delaware

Filed July 7, 1960, Ser. No. 41,273
12 Claims. (Cl. 214—1)

This invention relates to manually operated hydraulic actuator controls and more particularly to manually operated hydraulic actuator controls which provide for the operator a tactile sense of the pressure being exerted by the actuator, i.e. "feel back." While the device has general application, the invention is particularly useful in connection with the gripping tongs or jaws of remotely controlled manipulators or mechanical arms and the like. For illustrative purposes, the invention will be described in connection with remotely controlled manipulators.

In recent years, remote handling equipment has become an important phase of the atomic industry, among others. Included in such remote handling devices are crane hoists, underwater corrosion resistant manipulators, manned and unmanned mobile manipulators, fuel handling devices and mechanical arms. The mechanical arm is a remote control device which will duplicate all or part of the motions of the human arm and hand. These mechanical arms ordinarily include an upper arm member rotatably on a base and provided with drive motors for controlling the motions thereof. Pivotally mounted on the end of the upper arm and adapted to be moved about this pivot by suitable motors is a lower arm member. A pair of gripping tongs or jaws are provided at the free end of the lower arm. The jaws are opened and closed by a suitable remotely controlled actuator. The present invention provides an improved method for opening and closing such jaws with a provision for allowing the operator to obtain a tactile sense (feel-back) of the pressure being exerted against an object by the jaws. This allows the mechanical arm to be used for manipulating delicate glassware and very heavy articles with equal dexterity.

Previous practices in the field of remote handling and control embrace four main types. The first is the so-called "master-slave" control which utilize the strength of the operator through a system of pulleys, cables and levers. These devices can exert only the force the operator exerts less all the frictional effects which, because of the system's complexity, may be considerable and may vary appreciably from time to time. The second is power devices, i.e. electrically powered or hydraulically powered devices, which utilize a meter or sound system for measuring pressure exerted. These devices are satisfactory, but require extra attention, i.e. observation or listening, by the operator. The third type of device is the electrical servo system which utilizes an electromotive device such as a D.C. motor to resist the operator's grip. This sort of system has been used, among other places, in aircraft but is usually rather complicated and quite expensive. Furthermore, since the output device often operates in a stationary or stalled condition, these electrical devices often tend to overheat. The present invention, in contrast, can operate in a stalled condition indefinitely, yet has no tendency to overheat, and is cheaper and easier to manufacture than these electrical devices. Still another type of device utilizes a direct mechanical linkage to the output device but is provided with a power assist mechanism coupled to the linkage to increase the power output. This type of system is, however, limited in its application since the output device cannot be moved from place to place with respect to the control device because of the direct mechanical linkage. The present invention is more satisfactory in this respect since flexible hydraulic hoses may

be used which allow the manipulator to be moved in all directions with respect to the remotely placed control. A further disadvantage of previous devices is the inability to quickly and conveniently change the ratio between the pressure exerted by the output actuator and the tactile pressure detected by the operator.

It is therefore one object of this invention to provide an improved manually operated hydraulic actuator control which provides for the operator a tactile sense of pressure being exerted by the actuator.

It is another object of the present invention to provide an improved manually operated actuator control with feel-back which can exert a pressure of many times the strength of the human hand and in which the output device or actuator can be moved from place to place as desired.

It is still another object of the present invention to provide a manually operated actuator control having a provision for quickly and conveniently changing the ratio between the force exerted by the output device or actuator and the force exerted by the operator.

It is still another object of the present invention to provide a manually operated actuator control which will exert an output force which may be changed from greatly in excess of the pressure exerted by the operator's hand to only a small fraction of the force exerted by the operator's hand and still allow the operator to feel the pressure exerted regardless of the amount of the unexpected counterforce exerted by an object against the output actuator.

It is a still further object of the present invention to provide an improved manually operated actuator control having the ability to be maintained in a stalled condition for an indefinite period of time but yet which does not tend to overheat during the time it is maintained in a stalled position.

It is still a further object of this invention to provide an improved manually operated jaw control wherein the operation of the device may be changed as desired from a condition wherein the jaw grip is released when the operator relaxed his grip on the control element to a condition in which the jaws maintain their grip when the operator relaxed his grip.

It is still a further object of this invention to provide an improved manually operated actuator control in which the output actuator will lock in position when no pressure is being exerted on the control element.

Other objects and advantages will become apparent in the following specification and in the appended claims in which:

FIGURE 1 is a side elevation partly in section showing one form of the present invention;

FIGURE 2 is a transverse sectional view taken along lines 2—2 of FIGURE 1;

FIGURE 3 is a schematic diagram of another form of the present invention;

FIGURE 4 is a schematic diagram of still another form of the invention.

In FIGURE 1 there is shown a manually operated hydraulic actuator control 8 having feel-back according to the present invention which may be used in remotely controlled manipulating devices such as mechanical arms and the like. The embodiment illustrated in FIGURE 1 is used only in operating the gripping tongs 43 but it is apparent that like systems may be used to operate other motions of the mechanical arm such as rotation of the gripping mechanism, or extension of the arm.

The control device 8 is movably mounted on a fixed base 9. Motion of the extension 6 of control device 8 with respect to base 9 may be used to control other actuators (not shown) if desired such as those used for rotation or extension of the tongs or jaws 43. Extending

from base 9 is a frame member 10. Pivotally mounted on frame member 10 is a valve control element or lever 11 which may turn about a suitable pivot bolt 20. Control lever 11 is provided with an upwardly extending gripping portion 12 and a horizontally extending portion 17, and frame member 10 is provided with a horizontally extending support portion 16 and an upwardly extending portion 14. Frame member 10 is provided with a horizontally disposed portion 19 to support a pressure sensing means such as feel-back actuator 51 as described more fully herein below. At the upper end of control lever 11 there is provided a hand grip opening 13 and in the upper end of frame member 10 there is provided a thumb opening 15.

Between the pivot 20 and the base 9, there are provided two hydraulic fluid control valves 21 and 22, both such valves being secured to the control frame 10. Valve 21 is located above the end of control lever 11 and valve 22 is located below the end of control lever 11. Valve 21 includes an inlet opening 25 which communicates with a source of fluid pressure such as hydraulic fluid pump 30 through accumulator 31 and fluid line or conduit 32 and an outlet 40 which communicates with output actuator 42 through line or conduit 45 and to the feel-back actuator 51 through lines 52 and 53. Valve 22 includes an inlet opening 50 which communicates with feel-back actuator 51 and actuator 42 through hydraulic fluid lines 52 and 53 respectively. Outlet port 55 communicates with the pump 30 through line 56. Valve 21 is provided with a valve port 60 therein which may be opened and closed by means of valve 61. Valve stem 62 extends downwardly from valve 61 through the casing of valve 21 and the lower end thereof designated 26 is operatively associated with the upper portion of the end of valve control lever 11. Valve 22 contains a valve port 65 and a valve 66 to open and close the port 65. Extending upwardly from valve 66 and out through the casing of valve 22 is a valve stem 67, the upper end thereof designated 68 being operatively associated with the lower end portion of valve control lever 11. Thus when the grip openings 13 and 15 of control lever 11 and frame member 10 respectively are grasped manually and brought together, the free end of valve lever 11 moves upward contacting the lower end 26 of valve stem 62 causing valve 61 to open port 60 allowing the fluid to pass through the valve 21 from duct 32 to duct 45. Likewise when the hand grip on the control lever 12 and the upper portion 14 of control lever frame 10 is released, the free end of valve lever 11 will be caused to lower causing valve 21 to close and depressing the valve 66 by contact of the lower surface of valve lever 11 with the upper portion 68 of valve stem 67 causing valve 66 to open port 65 and allowing fluid to return from ducts 52 and 53 through duct 56 to the pump 30. While valves 61 and 66 may be seated by means of hydraulic pressure within the hydraulic system, they are preferably held in the normally seated position by means of suitable springs designated 70 and 71 respectively. Valve springs 70 and 71 should not be strong enough so that the pressure exerted will be felt to any appreciable extent by the operator.

The pressure sensing means or feel-back actuator 51 comprises a cylindrical casing 80 provided with a top wall 81 and bottom wall 82. Disposed transversely therein is a movable element such as flexible diaphragm 83 attached securely to the casing 80 along its circumference 85. A number of concentric bends are provided in a diaphragm 83 to allow the diaphragm to move up or down when hydraulic fluid is introduced into chamber 88 above the diaphragm. Connected to the bottom of diaphragm 83 and extending downwardly out through the bottom of the bottom wall 82 of feel-back actuator 51 there is a feel-back output member 86. The lower end 87 of member 86 is adapted to contact the upper surface of the horizontal portion of the control lever 11. The feel-back actuator 51 is attached to the horizontally extending portion 19 of frame member 10 by means of a wing nut

designated 90 which is screwed onto threaded stud 91 extending upwardly from the top of feel-back actuator 51 through slot 95. By loosening wing nut 90, the feel-back actuator 51 may be moved laterally to any desired position parallel to the horizontally extending portion of valve control lever 11 for purposes described herein below.

A short distance to the right of pivot 20 there are provided two centering springs designated 96 and 97. Spring 96 is disposed vertically above control lever 11 and the spring 97 is disposed vertically below control lever 11. The lower end of spring 96 and the upper end of spring 97 are attached to a suitable mounting bracket 98 extending outwardly from the side of control lever 11. Extending laterally from the top of the frame member 10 is a spring adjustment screw bracket 100 having an adjustment screw 101 screw threaded therein. The lower end of adjustment screw 101 is attached to the upper end of spring 96. Extending laterally from the bottom of control lever frame 10 is a spring adjustment screw bracket 105 having an adjustment screw 106 screw threaded therein. The upper end of adjustment screw 106 is attached to the lower end of spring 97. By tightening screw 101, spring 96 is compressed and the free end of the control lever 11 is biased toward opening valve 21 while tightening screw 106 will compress spring 97 and bias the control lever 11 toward opening valve 22.

The operation of the device will now be explained. The remotely located tongs 43 are opened and closed by a conventional fluid operable output actuator cylinder 42 by manually squeezing together and releasing the gripping portions 12 and 14 of control lever 11 and valve frame member 10 respectively. When the gripping portions 12 and 14 are squeezed together, the valve 21 will be opened and valve 22 will be closed causing fluid to pass into actuator cylinder 42 so that the tongs close. When the gripping portions 12 and 14 are made to separate, the free end of control lever 11 will be depressed opening valve 22 and closing valve 21, thereby withdrawing fluid from output actuator 42 and thus opening the tongs or jaws 43. When the gripping portions 12 and 14 are in an intermediate position, both valves 21 and 22 will be closed. In this condition fluid will not be able to pass either into or out of the output actuator 42. Thus, the tongs are locked in position and will neither open nor close.

The feel-back or tactile sense of the pressure being exerted by the tongs is provided by the feel-back actuator 51 which communicates with the outlet port of valve 21 through lines 52, 53 and 45 and with the inlet of valve 22 through line 52 so that when valve 21 is opened the pressure exerted by the fluid on output actuator 42 is also exerted on the top of diaphragm 83. Thus, when the gripping tongs 43 close on an object, the resistance set up by the object causes the fluid pressure in the actuator 42 to increase. The increased fluid pressure is exerted through lines 53 and 52 to chamber 88 causing diaphragm 83 and the rod 86 to exert a downward force against the top surface of the control lever 11. This force tends to separate the gripping portions 12 and 14 and can be detected by the operator as a sense of pressure proportional to the pressure exerted by the tongs against the object. Thus, when the tongs close without meeting any resistance, no outward pressure will be exerted by the gripping members 12 and 14. It should also be noted that the pressure exerted by the tongs 43 will always be proportioned to the pressure exerted by the diaphragm 83 against control lever 11. By using a suitable ratio of tong actuator area to feel-back diaphragm area, and making due allowance for any mechanical leverage in the device, the tongs may be made to grip with almost exactly the same force as applied by the operator in squeezing the control handle.

The invention has a further provision for allowing the tongs to perform duties requiring more than the strength in a man's hand. This provision consists of means for

adjusting the effective point of application of force from said feel-back actuator to said control lever. If it is desired to grip with a greater amount of force, the feel-back actuator 51 may be moved to selected positions substantially parallel with the longitudinal axis of portion 17 of lever 11 by loosening wing nut 90. As a result, the ratio of the force exerted against the operator's grip with respect to the force exerted by the gripping tongs 43 may be varied. Thus, if the feel-back actuator 51 is moved closer to the pivot point 20, the gripping tongs 43 will exert an increased force in comparison to the force exerted by the operator's hand. Conversely, if the feel-back actuator 51 is moved away from the pivot 20, the pressure exerted by the gripping tong 43 will be reduced in comparison to the force exerted by the operator's hand. Thus, the provisions for changing the position of the feel-back actuator 51 allows the force exerted by the tongs 43 to be the same as the pressure exerted by the operator, or many times the force exerted by the operator or only a fraction of the pressure exerted by the operator.

The biasing springs 96 and 97 can be biased either toward opening or closing the valve 21. Thus, if adjustment screw 101 is tightened, spring 96 will be compressed and the horizontally extending portion 17 of the control lever 11 will be raised causing valve 21 to open, thus maintaining the hydraulic gripping tongs in a normally closed position. If screw 101 is loosened and the adjustment screw 106 is tightened, a greater amount of pressure will be exerted by spring 97 and the control lever 17 will be depressed causing valve 21 to close and valve 22 to open allowing suction from pump 30 to withdraw fluid from lines 56, 52 and 53 thereby maintaining the tongs 43 in a normally opened position. Maintaining the tongs 43 in a normally opened position is the preferred operating condition for the invention.

In FIGURE 3 there is shown another embodiment of the invention including a horizontally extending control lever 150 having a control handle 151 at the right side thereof. Lever 150 is pivotally mounted on pivot 152. To center the control lever 150, there are provided two springs designated 148 and 149 attached to lever 150 between pivot 152 and handle 151. These springs operate similarly to centering springs 96 and 97 described above in connection with the embodiment illustrated in FIGS. 1 and 2. Attached to the left side of control lever 150 there are four poppet valves 155, 156, 157 and 158, each of which is pivotally connected to the control lever 150 and constitute the movable elements of fluid valves 160, 163, 161 and 162 respectively. When valve control lever handle 151 is raised, valves 160 and 162 will be open while the valves 161 and 163 will be closed. Conversely, when the control lever is lowered, valves 161 and 163 will be open and valves 160 and 162 will be closed. A pump 170 transfers fluid to valves 160 and 161 through line 172. The pair of valves designated 161 and 162 and the pair of valves 160 and 163 are connected in series between the outlet and inlet of pump 170, each pair being in parallel with respect to the other pair. Part of the fluid passing through line 172 is directed through line 173 to valve 160 and a part is directed through line 174 to valve 161. If valve 161 is open, the fluid passing out of valve 161 runs through line 175 to actuator 177 at the right of a movable element such as piston 176 and through line 178 to the upper chamber of the feel-back actuator 180 which is similar in construction to the feel-back actuator of the embodiment illustrated in FIGURES 1 and 2. A flexible diaphragm 181 within actuator 180 has connected to it a downwardly extending actuator rod 182 which passes out through the bottom of the actuator casing and rests against the top surface of the control lever 150 to provide feel-back to the operator in a manner similar to that described in connection with FIGURES 1 and 2. Conversely, if valve 160 is open, the fluid passing out of valve 160 runs through line 198 to actuator 177 so as to cause piston 176 to move to the right. The inlet port of valve 162 is connected to the outlet port of valve 161 by fluid line 185 and the outlet of valve 162 is connected to the reservoir tank 186 by means of fluid line 187. The inlet of valve 163 is connected to the outlet of valve 160 by means of line 190 and the outlet of valve 163 is connected to the reservoir 186 by means of line 191. The outlet of the reservoir 186 is connected to the pump 170 by means of line 195. The outlet of valve 160 is connected to actuator 177 at the left side of piston 176 by means of line 198.

To move piston 176 to the left, control lever 151 is lowered causing valves 160 and 162 to be closed and valves 161 and 163 to be open. Fluid will then pass from the pump through lines 172 and 174 into valve 161 and through line 175 into actuator 177 and through line 178 into feel-back actuator 180. The pressure of fluid to the right of piston 176 drives the piston to the left and forces fluid to the left of piston 176 through line 198 and because valve 160 is closed through line 190 then through valve 163 and finally into the reservoir 186. When the handle 151 is raised, valves 161 and 163 are closed and 160 and 162 are open, allowing fluid to pass from the pump through lines 172 and 173, through valve 160 and out through line 198 to the left side of piston 176. Fluid pressure on the left side of piston 176 drives the piston 176 to the right causing fluid to move from the actuator 177 through line 175 then through line 185, next through valve 162 and finally through line 187 to the reservoir 186. By means of the apparatus described, a positive pressure is exerted upon the right side of piston 176 when the control handle 151 is lowered, and when the handle 151 is raised, positive pressure is produced on the left side of piston 176. The advantage of the system illustrated in FIGURE 3 is that a positive pressure can be used to drive the piston 176 in either direction, thus assuring positive action of piston 176 when it is moving either to the left or to the right. Suction on the inlet side of the pump does not have to be relied upon to move the piston 176 back to its starting position. The feel-back actuator 180 operates in a manner similar to that illustrated in FIGURES 1 and 2 so that when the piston 176 begins to move to the left and encounters an object, the resistance causes fluid pressure to be built up in lines 175 and 178 and in the upper compartment of the diaphragm chamber 180 causing diaphragm 181 to move downward and exert a force against the upper surface of lever 150 thereby allowing the operator to sense a pressure proportional to the resistance met by the piston 176.

As in the embodiment illustrated in FIGURES 1 and 2, the feel-back actuator 180 may be moved to the left and right substantially parallel to the axis of control lever 150 in order to increase or decrease the feel-back sensitivity as desired.

Referring now to FIGURE 4, there is shown still another embodiment of the invention including a horizontally disposed control lever 200 pivotally mounted on pivot 201 and movable manually up and down about pivot 201 by means of control lever handle 202. To center the control lever handle 200, there are provided between handle 202 and pivot 201, two springs 203 and 204 which may be biased towards the valve open position or towards the valve closed position as described in connection with FIGURES 1 and 2. Located above the left end of control lever handle 200 is a valve 205 having an inlet connected to the outlet of pump 206 by fluid line 207. The valve 205 is divided into an upper compartment 208 and lower compartment 209 separated by means of a wall having a valve port 210 in the center thereof. Port 210 may be opened and closed by means of poppet valve 211, the stem 212 of which is pivotally connected to the left end of valve control lever 200. When the left end of valve control lever 200 is raised, port 210 will be closed and when lowered, port 210 will be opened. Connected between valve compartment 208 and actuator 215, there is provided a fluid line 216 and connected between valve chamber 208 and

the feel-back actuator 220 is a fluid line 221. When the valve is open, fluid from the pump 206 passes through port 210 into chamber 209, passes out of the valve through line 222 into reservoir 223 and back to pump 206 through line 224. A by-pass line 225 may be provided and designed in order to limit the pressure exerted by pump 206.

When the pump is in operation and port 210 is opened, fluid will pass through line 207, into valve 205, through port 210, into chamber 209, through line 222, through the reservoir 223 and back to the pump 206. Since the flow is unrestricted through the valve and reservoir only a small amount of pressure will be built up in the hydraulic actuator 215 and in the feel-back actuator 220. When, however, the handle 202 is lowered manually causing lever 200 to turn about pivot 201, poppet valve 211 will be raised, closing port 210 so that the passage of fluid into the reservoir tank through line 222 is interrupted. As a result, pressurized fluid will pass outwardly in line 216 and 221 causing the piston 230 to travel to the left and causing the diaphragm 231 and diaphragm lever 232 of the feel-back actuator 220 to be lowered. The pressure of diaphragm lever 232 against the upper surface of control lever 200 resists the downward pressure on handle 202 exerted by the operator when the actuator piston 230 meets a resistance as described above in connection with the other embodiments. A lightweight spring 240 is used to return the piston 230 to the right when valve 205 is again opened. Connecting rod 242 extending out of the casing of actuator 215 may be used to position any desired object.

Other forms of valves may be used in place of the poppet valve as illustrated. For example, a conventional spool valve may be used. If a spool valve were used, in the FIGS. 1, 2 modification, it could be pivotally connected to the free end of the horizontal extension 17 of control lever 11 and would still provide a locking action when the lever control handle is in an intermediate position. Furthermore, such a spool valve would require no springs such as springs 70 and 71.

While the feel-back device has been illustrated as a flexible diaphragm mounted in a cylindrical compartment, other types of hydraulic output devices or actuators could be used such as a conventional cylinder and piston type actuator.

Relatively small valves are preferred in the embodiments illustrated in FIGURES 1 through 4 in order to make the force exerted by the valve on the control lever arm negligible. In the embodiment illustrated in FIGURE 4, the valve 211 may be made relatively large in size and the valve head of valve 211 correspondingly larger in area so that the fluid pressure in chamber 208 of valve 205 would then exert a substantial force against the top of valve 211 when the valve was closed to provide feel-back to the operator. In the event that this modification were made, it will be apparent that the feel-back diaphragm device 220 could be eliminated. In this modification, the valve 205 should be movable with respect to the lever arm 200 when variations in sensitivity of feel-back are desired.

The embodiment illustrated in FIGURES 1 and 2 will normally be preferred because it has an advantage that the valves handle only the amount of fluid displaced by the cylinder 42 while the valves of the embodiment illustrated in FIGURE 4 must handle the entire displacement of the pump. The embodiment illustrated in FIGURE 3 is preferred where it is desired to provide a positive pressure on both sides of the actuator piston. The embodiment illustrated in FIGURE 4 will be preferred where simplicity is important but the piston 230 will have to be retracted by means of a spring or the like and cannot rely upon the negative pressure exerted at the pump intake as in the embodiment illustrated in FIGURE 1.

From the foregoing discussion, it will be apparent that the invention provides a novel and reliable means for

operating actuators. It is especially valuable in remote controlled manipulators to provide a tactile sense for the operator of the pressure being exerted by the actuator on the object handled. The invention includes provision for simply and quickly changing the ratio of the force exerted by the operator and by the output actuator so that the output actuator may exert many times the strength of a man's hand or if desired the ratio may be changed so that the operator feels a fairly large force while the actuator exerts only a small force. It also includes a provision for allowing the tongs to remain normally open, normally closed or for locking the tongs in a gripping position when the operator releases his grip whichever is desired.

In view of the principles set forth herein, I have shown some of the ways of carrying out the present invention and some of the equivalents suggested by these disclosures.

Now, therefore, I claim:

1. A remotely controlled manipulator device including a hand mechanism for performing gripping motions, said hand mechanism having a pair of relatively movable gripping members, first pressure responsive actuator means for effecting gripping movement of said gripping members, means for operating said output actuator including a source of pressure, conduit means connecting said actuator to the pressure source, valve means for permitting the flow of a fluid medium from the pressure source to the actuator, said valve means also adapted to prevent the flow of said fluid medium to said actuator, lever means for opening and closing said valve means by direct contact with said valve means, second pressure responsive actuator means providing manual sensing of the magnitude of the gripping force being exerted by the gripping members on an object, said second pressure responsive actuator means operatively connected between the valve means and the first actuator means, said second actuator means provided with an output member which directly contacts the lever means and exerts a force against said lever means, and means for varying the effective relative position of said second pressure responsive actuator means with respect to the lever means whereby the ratio of the force exerted by the gripping members with respect to the force exerted by the operator of the manipulator may be varied.

2. In a remotely controlled manipulator system a hand mechanism for performing gripping motions, said mechanism having a pair of relatively movable gripping members, an actuator for effecting gripping movement of said gripping members, a source of fluid pressure, means for operatively connecting said actuator to said source, valve means for controlling the flow of a fluid medium from said source to said actuator, means for opening and closing said valve means by direct contact with said valve means, the improved combination comprising pressure responsive sensing means operatively connected to the valve opening and closing means and the gripping members whereby the pressure exerted by said gripping members on an object can be manually sensed.

3. The combination of claim 1 wherein the lever means for operating the valve means includes an elongated member pivotally connected to a base member, a first end of said member having a handle thereon for manual control, the second end of said member adapted to engage the valve means so as to actuate said valve means in response to pivotal movement of said lever relative to the base member.

4. The combination of claim 1 wherein the lever means includes an L-shaped member which includes a horizontal leg and a vertical leg, said vertical leg including means for manually gripping said leg, a base member, means for pivotally connecting said L-shaped member to the base member, and biasing means for orienting said L-shaped member in a desired relative position.

5. The combination of claim 3 wherein the second

pressure responsive actuator means includes a feel-back actuator responsive to fluid pressure, the output member forming a part of said actuator, means for mounting said feel-back actuator so that said output member contacts a portion of the elongated member, and conduit means for operatively connecting said actuator to the output actuator.

6. A remotely controlled manipulator device including a hand mechanism for performing gripping motions, said hand mechanism having a pair of relatively movable gripping members, a pressure responsive output actuator for effecting gripping movement of said gripping members, means for operating said actuator means including a source of pressure, at least two control valves for controlling the flow of a fluid medium from said source of pressure, means for operating said control valves independently of each other, said valve operating means including an elongated lever pivotally connected at a point between its two ends to a base member, one end of said lever being positioned between said control valves and adapted to engage at least one of said valves in response to pivotal movement of said lever relative to the base member, pressure responsive means providing manual sensing of the magnitude of the gripping force being exerted by the gripping members on an object, said pressure responsive means operatively connected between the pair of control valves and the output actuator, and means for mounting said pressure responsive means relative to the base member so that it contacts a portion of the lever.

7. The combination of claim 6 wherein the pressure responsive means includes a feel-back actuator responsive to fluid pressure, said actuator having an orifice, a relatively movable output member which contacts a portion of the pivotal lever and which exerts pressure on said lever when the output actuator meets resistance to motion, and a variable volume chamber between said orifice and said output member.

8. The combination of claim 7 wherein the variable volume chamber is formed by the sides of the actuator, one end of said actuator, and a flexible diaphragm located within the actuator between the orifice and the output member.

9. A remotely controlled manipulator device including a hand mechanism for performing gripping motions, said hand mechanism having a pair of relatively movable gripping members, a first pressure responsive actuator for effective movement of said gripping members, an actuator control comprising a source of pressure, means for controlling the flow of a fluid medium from said pressure source, said means including a first control valve and a second control valve, a control lever for opening and closing said first and second valves, a second pressure responsive actuator to provide feel-back, said second actuator operatively connected to the first actuator by conduit means, said second actuator provided with an output member which is adapted to contact a portion of said control lever and exert pressure on said lever when the first actuator meets resistance to motion, thus permitting manual sensing of the magnitude of gripping force being exerted by the gripping member on an object.

10. A remotely controlled manipulator device including a hand mechanism for performing gripping motions, said hand mechanism having a pair of relatively movable gripping members, a first fluid pressure responsive actuator for effecting gripping movement of said gripping members, means for operating said first actuator including a source of fluid pressure having an inlet and an outlet, means for controlling the flow of fluid from the pressure source, said means including a first flow control valve and a second flow control valve connected in series between the outlet and the inlet of said pressure source, lever means for opening and closing said first and

second control valves, said lever means being so arranged that opening of one of said valves closes the other of said valves, and a second fluid pressure responsive actuator operatively connected to the first actuator, said second actuator contacting a portion of the lever means to exert pressure against said lever means proportional to fluid pressure within the first actuator, said second actuator connected between the means for controlling the flow of fluid from the pressure source and the first actuator.

11. A remotely controlled manipulator device including a hand mechanism for performing gripping motions, said hand mechanism having a pair of relatively movable gripping members, a first fluid pressure responsive actuator for effecting movement of said gripping members, means for operating said first actuator including a source of fluid pressure having an inlet and an outlet, means for controlling the flow of fluid from the pressure source, said means including a control valve, lever means for opening and closing said control valve, said lever means pivotally connected at a point between its two ends to a base member, one end of said lever means adapted to engage the control valve in response to pivotal movement of said lever means relative to the base member so as to open and close said control valve, and a second fluid pressure responsive actuator operatively connected to the first actuator, said second actuator contacting a portion of the lever means to exert pressure against said lever means proportional to fluid pressure within the first actuator, said second actuator connected between the means for controlling the flow of fluid from the pressure source and the first actuator.

12. A remotely controlled manipulator device including a hand mechanism for performing gripping motions, said hand mechanism having a pair of relatively movable gripping members, a first fluid responsive actuator for effecting movement of said gripping members, means for operating said first actuator including a source of fluid pressure having an inlet and outlet, means for controlling the flow of fluid from the pressure source, said means including a first pair of control valves connected in series between the outlet and the inlet of said pressure source and a second pair of control valves connected in series between the outlet and the inlet of the said pressure source, said first pair of control valves connected in parallel with respect to said second pair, lever means for opening and closing said valves, said valves being so arranged that one valve of each pair will be open when the other valve of that pair is closed, conduit means connecting said first pair to the first actuator, conduit means connecting said second pair to the first actuator, and a second fluid pressure responsive actuator operatively connected to the first actuator, said second actuator contacting a portion of the lever means to exert pressure against said lever means proportional to fluid pressure within the first actuator, said second actuator connected between the means for controlling the flow of fluid from the pressure source and the first actuator.

References Cited by the Examiner

UNITED STATES PATENTS

2,383,682	8/45	Price.	
2,530,659	11/50	Hill	121—38.1
2,573,403	10/51	Church.	
2,627,847	2/53	Clark et al.	

FOREIGN PATENTS

670,085	11/29	France.
234,502	10/25	Great Britain.

HUGO O. SCHULZ, *Primary Examiner.*

ALAN BLUM, KARL J. ALBRECHT, *Examiners.*

July 2, 1968 L B TAYLOR 3,390,580

SAMPLE SYSTEMS

Filed Jan. 24, 1966 2 Sheets-Sheet 1

Fig.1

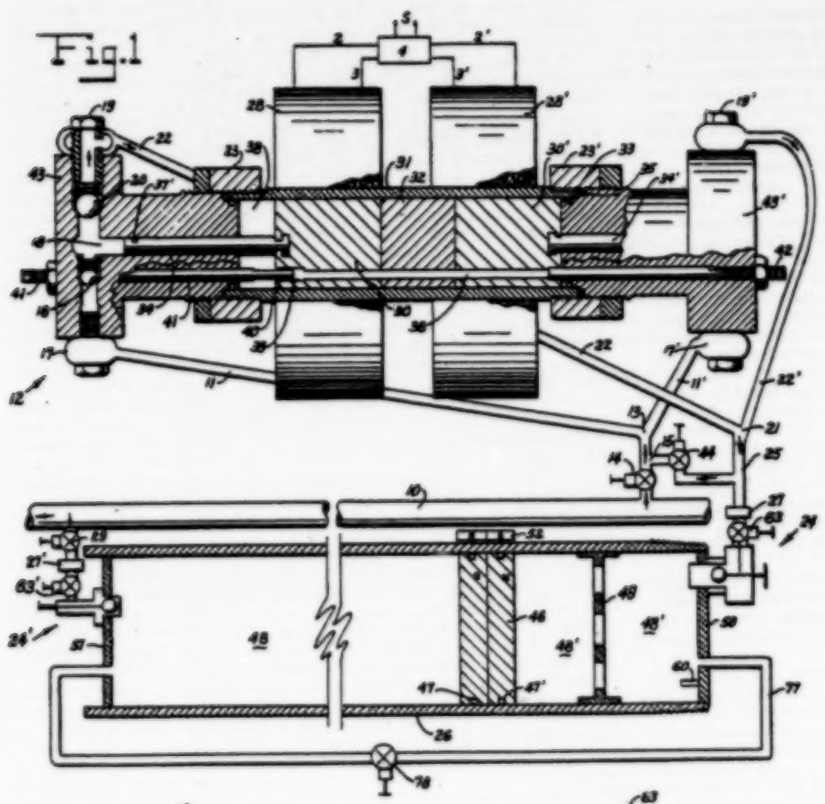

Fig.2

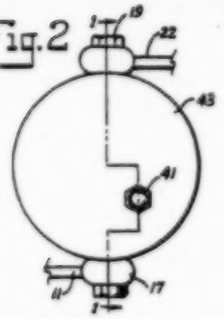

Fig.3

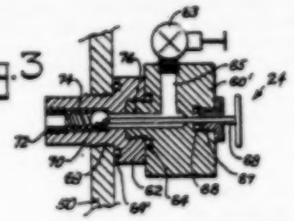

INVENTOR.
L.B.Taylor
BY C.M.Lee Atty.

July 2, 1968 L B TAYLOR 3,390,580

SAMPLE SYSTEMS

Filed Jan. 24, 1966 2 Sheets-Sheet 2

Fig.4

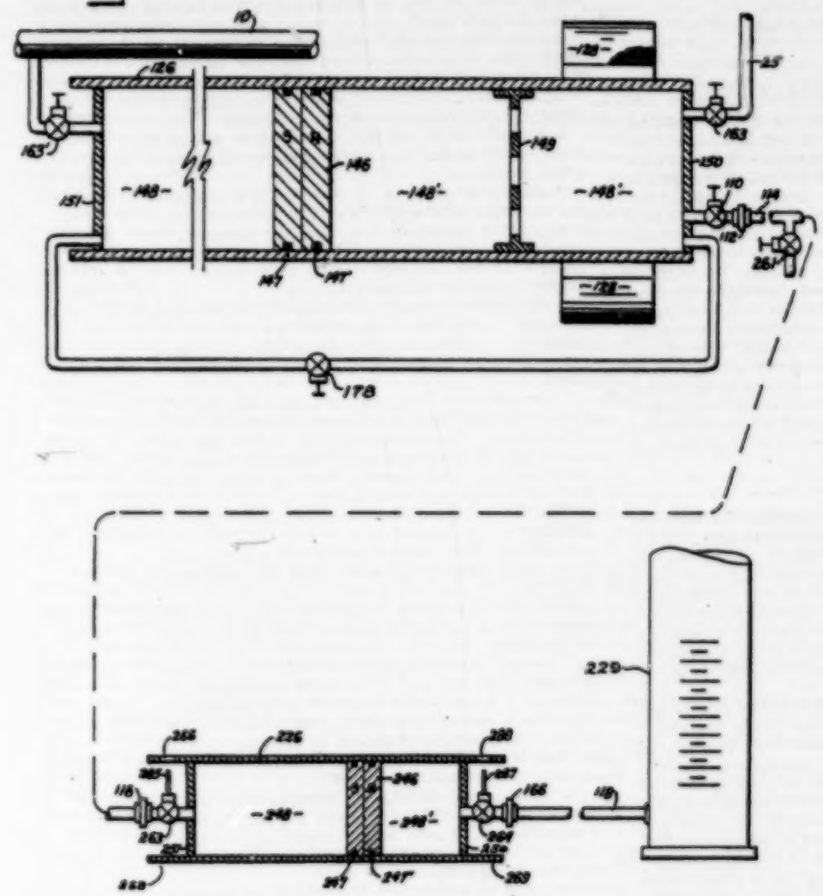

INVENTOR.
L.B.Taylor
BY C.M.Lee Atty.

United States Patent Office

3,390,580
Patented July 2, 1968

3,390,580
SAMPLE SYSTEMS
L. B. Taylor, Rte. 3, Box 148,
Snyder, Tex. 79549
Filed Jan. 24, 1966, Ser. No. 522,757
14 Claims. (Cl. 73—422)

ABSTRACT OF THE DISCLOSURE

A sampling system for withdrawing fluid samples from a conduit consisting of a double acting solenoid operated pump and a flask for storing the fluids sampled. In addition another smaller flask may be utilized for transporting the sampled fluid to an analysis location. The pump features two solenoids, one for moving the armature in each direction the armature being provided with two suitably located magnets. The two pump pistons extend beyond the armature into the two pump cylinders. The receiving flask is constructed of nonmagnetic material in the form of a cylinder closed at both ends save for suitable filling and emptying ports. A magnetized piston in the cylinder separates the sampled material from that there before. The magnetic properties of the piston are utilized to either provide an indication of its position or for driving it to one end of the cylinder or the other. A perforated piston can likewise be moved magnetically for stirring purposes. The second flask is similar in construction to the first but is smaller.

This invention relates to an apparatus for sampling fluids and pertains more particularly to an apparatus for automatically collecting, over a predetermined time period, a continuous composite or average fluid sample from a pipe line or the like. The time interval between each integral of sample, as well as the quantity of the sample, may be set at a predetermined rate to provide a composite sample of the flowing stream so as to enable a laboratory determination of the quality and composition of the sampled fluid.

Another aspect of this invention relates to a sample receiver with a novel mixing device that is arranged in conjunction with the sample receiver that will overcome any possible settling out of heavy components. The mixing device is magnetically actuated through external means so as to enable the laboratory to withdraw a small quantity of sample from the receiver that is accordingly representative of the entire contents of the sampled fluid contained within the receiver. The novel receiver further provides a unique magnetic indicating means that enables one to determine the fluid content level of the receiver when the sample being taken is a liquid.

This invention further provides a novel sampling method that embraces the steps of collecting a predetermined number of integral sample portions over a predetermined interval of time and subsequently transferring a portion of the sample into a smaller size flask for laboratory analysis.

Also of importance is the provision of a novel valve arrangement used in conjunction with the receiver that enables one to readily charge or withdraw a sample from the container with a minimum of effort while avoiding contamination.

It is accordingly an object of this invention to provide a novel pump such as before mentioned that will move a predetermined amount of fluid during a predetermined time cycle.

Another object of this invention is to provide a novel sample receiver that precludes purging prior to sampling.

Another object of this invention is to provide a novel means of determining the fluid contents of the novel sample receiver.

Another object of this invention is to provide a novel mixing device that may be used in conjunction with the novel sample receiver.

Another object of this invention is to provide a novel combination of a pump, receiver flask, and laboratory flask arranged in a novel manner that permits a predetermined amount of metered sample to be rapidly obtained from the system for laboratory analysis.

Still another object of this invention is to provide a novel method of obtaining a representative sample from a fluid system.

A still further object of this invention is to provide a unique method of sampling that includes transferring a predetermined amount of fluid sample at predetermined time intervals into a main sample receiver that may subsequently deliver a uniform portion of the sample to a smaller receiver for laboratory analysis.

A still further object of this invention is to provide a novel valve arrangement in conjunction with the receiver that simplifies obtaining the sample and enables rapid withdrawal of portions of the sample from the receiver.

These and other objects of the instant invention will become apparent from the following description of the invention taken in conjunction with the drawing, wherein:

FIGURE 1 is a diagrammatic view, partly in section, of one embodiment of the sample receiver and pump means, taken along line 1—1 of FIGURE 2.

FIGURE 2 shows an end view of the pump means of FIGURE 1.

FIGURE 3 is an enlarged sectional view of the novel valve means used in conjunction with the receiver of FIGURE 1.

FIGURE 4 is a partly diagrammatic view with some parts shown in section, of another embodiment of the sample system.

In general, the drawing shows in FIGURE 1 a pump indicated by numeral 12. The pump 12 is operatively attached to a system which is desired to be sampled, as for example, fluid carrying pipe line 10 at valve 14. The pump 12 is preferably connected to a sample receiver or flask 26 by inlet valve arrangement 24, and to the pipe line by the return purge valve 29.

Referring now in detail to the drawings, there is seen connected to valve 14 of pipe line 10 a conduit having a T-connection 15 followed by a Y-connection 13 that delivers the fluid sample into inlet connectons 17 and 17' of double acting pump 12.

The pump 12 is comprised of a central motor portion including a cylindrical housing 31 that carries solenoid coils 28, 28' peripherally thereabout and an armature made up of iron slugs 30, 30' and non-ferrous slug 32. Couplings 23 and 23' threadedly attach each end of housing 31 to the pump heads 43 and 43', which in turn contain the valves and pistons that move the sampled fluid.

A hollow bolt and connection 17 is connected to conduit 11 which is attached to the Y-connection 13 and communicates with pumping cavity 18 through the inlet check valve 16 located in the pumping cavity 18. The piston 34 is reciprocatingly received in close tolerance relationship within pumping cavity 18 and provides a pumping action as it reciprocates within the chamber since inlet valve 16 and outlet valve 20 are one way check valves that permit one way flow through the pump heads 43. A hollow nut 19 leads into outlet connection at conduit 22 which is essentially identical to the similar nut at fluid connection 17 except for being larger in diameter to permit assembly of the two check valves. Conduit 22 joins conduit 22' in a Y-connection indicated by number 21.

The motive power for piston 34 is provided by the before mentioned iron slugs 30 in conjunction with the non-ferrous portion 32 which jointly make up an armature comprised of elements 30, 32, and 30'. The armature is moved or actuated by solenoids 28 and 28' which are essentially a wire wound coil peripherally surrounding the non-magnetic cylinder 31. Energization of the solenoids at a predetermined time cycle will accordingly impart a movement to the armature to provide a pumping action having a cycle of operation that will coincide with that of the energization of the solenoids.

Control unit 4 provides the solenoids 28 and 28' with the above mentioned timed cycle or impulse of electrical energy. The control unit may be conveniently located in proximity to the pump 12 and provided with a source of current S. Conduits 2, 3, 2', and 3' electrically connect the solenoid coils to the control unit.

Rigidly attached to each armature slug 30 and 30' is the before mentioned pistons 34 and 34' which carries a grooved end portion to accommodate O-ring 37' to fluid seal the piston 34, pumping cavity 18, and void 38 from each other.

The void 38 is filled with fluid and communicates with a similar void in the opposite action or pump through adjustable passageway 36, to thereby provide for a cushioned stop which accordingly eliminates bumping or shock as would occur should the armature abut the main body or pump heads 43, 43' of the pump 12. This second void is not seen since the armature is at the extreme end of its travel or in abutting relationship with the pump head 43', hence this second void has been displaced or filled by the armature, as will be void 38 upon travel of the armature to the opposite extreme end of its stroke. Thus it is seen that the fluid contained within the voids is transferred from one void to the other with each stroke of the armature.

The size of the passageway 36 is controlled by reduced rod portion 40 which is adjustably mounted in the main pump head 43 by a threaded counter-bore that receives a like threaded rod portion 41 carrying a lock nut thereon. The passageway is drilled through as seen at 36 and may be provided with a larger counter-bore as at 39 to increase the rate of response of the armature and piston arrangement. The opposite pump head carries a similarly threaded adjusting rod 42 that extends up to or beyond the face of the armature and received in passageway 36. The rod 42 provides a second stop for the second slug 30'. Except for the construction of the already discussed rod 42, the remaining features of the pump head 43', are identical to the similar pump head 43, and accordingly will not be discussed in further detail.

Return conduits 22 and 22' are interconnected at Y-connection 21. A T-connection 25 provides a bypass back to T-connection 15 and located therebetween is a one-way check valve 44 that is resiliently biased to provide flow in the direction of the arrow. A quick disconnect comprised of union 27 connects the pump outlet to the sample reservoir or flask 26.

The sample flask comprises a cylindrical container 26 made of non-magnetic material and having a valved inlet at end 50 and a valved outlet at end 51. Grooved piston 46 carries O-ring 47 and 47' peripherally located thereabout and divides the flask into two sealed chambers 48 and 48'. The piston is adapted to slide from wall 50 to wall 51 as the chamber 48' is filled. The piston is magnetized so as to form a magnet having a polarity as indicated in the drawing. A stop 60 prevents damage to any portion of the valve 24 that may extend into the chamber 48'.

Located within sealed chamber 48' is a perforated plate 49 that is slidably received within the cylinder 26 and within chamber 48'. The plate is fabricated from magnetic material and may be caused to travel longitudinally between wall 50 and piston 46 upon application of an external magnetic field.

Conduit 77 is shown interconnecting each of the chambers 48 and 48' through a valve 78. This conduit and valve arrangement permits the piston to be moved from wall 51 to wall 50 in order to prepare the flask for a new sample while avoiding the necessity of discharging the old sample from the container. The piston is moved by an external magnetic force, such as a large solenoid coil placed peripherally about the flask, and moved from one extremity to the other while carrying the piston 46 along with the coil through magnetic attraction.

Located externally of the flask 26 is a magnet 52 mounted for longitudinal movement along the outside of the wall of the flask. The poles of magnet 52 are opposite in polarity to the piston 46 and hence the magnet 52 will tend to follow the piston thereby giving an indication of its position and hence the relative volume of the chambers. The magnet 52 may be located on a detachable track, or permanently mounted in a low friction grooved support extending longitudinally and adjacent the flask. The specific support means employed for the magnet are not shown in the drawing.

FIGURE 3 shows the details of the valve 24 that is located in each end wall 50, 51 of the flask. The valve arrangement is comprised of a ball-check valve 70 having a sealed stem 68 that upsets the ball from the seat when engaged therewith. The valve body 62 is threaded as at 69 and incorporates an O-ring seal 64' to provide a positive seal between the valve body and the flask. The valve body includes a threaded counter-bore that provides a chamber in which is housed the ball 70 and spring 74. The threaded keeper 72 maintains the spring in compression and forces the ball against its seat. Threadedly mounted in the body of the valve is a valve head 60' having drilled passageways 65 and 76 provided therein. Passageway 76 is counter-bored to receive the valve stem guide plug 67 and O-ring seal 66 which maintains the stem and plug in fluidtight relationship to the remainder of the valve parts. A conventional valve 63 may optionally be provided at the end of passageway 65 in order to maintain passageways 65 and 76 filled with sample fluid, if desired, thus eliminating the need for filling these passageways with mercury prior to withdrawing a portion of the sample for testing, as is known in the art.

Located in wall 51 of flask 26 is a second valve 24' identical to valve 24. A safety valve 63' attaches to a quick disconnect 27' which leads to sample return valve 29 in the main line 10.

Looking now to the embodiment of FIGURE 4, there is seen therein, a sample flask arrangement adapted to be used in lieu of the before described sample flask 26 of FIGURE 1. FIGURE 4 shows a safety valve 163 operatively connecting sample flask 126 to the Y-connection 25, which delivers fluid therethrough in accordance with the embodiment of FIGURE 1. Return valve 163' is operatively connected between the flask 126 and the pipe line 10. Valve 110 interconnects the laboratory flask 226 with the stationary sample flask 126. The stationary sample flask 126 is provided with magnetic piston 146 having a peripheral groove thereabout to receive O-rings 147 and 147' located therein in sealing relationship with the inside wall of the sample flask 126. The piston 146 divides the sample flask 126 into two chambers 148 and 148'.

Located within sealed chamber 148' is a perforated plate 149 that is slidably received within the cylinder 126 and within the chamber 148'. The plate is fabricated from magnetic material and may be caused to travel longitudinally between the wall 150 and the piston 146 upon application of external electrical current to the solenoid coil 128 located about the outer periphery of the sample flask 126. The relationship of the piston 146 and the perforated plate 149 to the sample flask 126 is identical with the relationship of these elements as was explained in conjunction with FIGURE 1.

The laboratory sample flask 226 is adapted to be connected to the stationary flask 126 by the quick disconnect 116. The laboratory sample flask is comprised of an elongated tubular vessel having recessed end plates 251 and 250 integrally attached to the sidewall 226 so as to provide tubular extensions 268, 269 in which is housed inlet and outlet valves 263 and 264 respectively, adjacent the end walls 250 and 251. The tubular extension is apertured as at 266 and 288 to provide access to the before mentioned valve stems by inserting a suitable valve stem handle therethrough. Each valve stem 265, 267 is preferably splined at the free end thereof in order to provide a means by which a valve stem handle or tool may be inserted through the apertures to thereby mate with the spline and accordingly actuate the valve between open and closed position. The valves 263 and 264 are suitably recessed within the tubular extension so as to protect the valve mechanism from damage or from inadvertently being opened after the sample has been taken.

Located within the laboratory flask 226 is a magnetically actuated piston 246 slidably received within laboratory flask 226 so as to be able to reciprocate from wall 250 to wall 251, in a manner as previously discussed in conjunction with the flask 26 and 126.

The grooved piston 246 receives O-ring 247, 247' about the periphery thereof to provide a sealed relationship between the piston and the flask wall.

The outlet valve 264 of the flask 226 is provided with quick disconnect 166 adapted to be connected to laboratory analyzing equipment.

A graduated vessel 229 may operatively be connected to the laboratory flask 226 by fluid conduit 118 when it is desired to obtain a specific sample size.

Operation

Referring to FIGURE 1, the pump and receiver are disclosed as being operatively attached to each other while taking a sample from pipe line 10. The sampled fluid flows through the main sample cut-off valve 14, past T-connection 15, to Y-connection 13 where the flow splits to provide each inlet connection 17 and 17' of the pump 12 with a fluid source. The fluid is forced into pumping cavity 18 through the hollow bolt at 17 and past one-way check valve 16 as it is moved by piston 34 past the outlet connection and hollow bolt at 19 into fluid conduit 22. The fluid entering the opposite pump head 43' at connection 17' follows the same type flow path since both pump heads are identical except for the control means 41 and 42. The fluid return lines 22 and 22' are brought together at Y-connection 21 where the fluid then flows to the sample flask 26 through T-connection 25, quick disconnect 27, safety valve 63, and check valve 24.

The rate of response of the pump piston 34 to the applied current of solenoids 28 is regulated by the adjustable orifice 39, 40 located in passageway 36. The response rate of the armature to the current applied to solenoids 28 and 28' is increased as the rod 40 is withdrawn from the counter-bore 39 which forms part of the orifice or adjustable passageway. The length of the pump stroke is controlled by adjustable rod 42 which provides a cushioned stop for the armature. As rod 42 is removed from its bore, the stroke of the pump is increased, and conversely, as the rod is extended into the pump head, the length of the stroke is decreased. Hence rods 41 and 42 provide a means by which both the rate of response and the length of the stroke of the piston may be adjusted to control the pumping time during a cycle as well as the integral sample size that is transferred from the pipe line 10 into the flask 26.

The rate at which the armature is actuated, or the number of strokes per minute made by the pump, is governed by control unit 4, which is adapted to energize the coils 28 and 28' with a signal that is sent through the electrical conduits 2, 2', 3, and 3'.

When the fluid sample first begins to enter flask 26, piston 46 and agitator 49 will be adjacent wall 50 in order to present the smallest possible void between the piston and wall, thus minimizing contamination. As the pump fills the flask with fluid, the piston 46 will move towards the opposite wall 51 as the piston is displaced by the introduced fluid. Should the flask continue to be filled until the piston abuts wall 51, and the pump continue to operate after the flask is completely full, the bypass at 44 will then open due to the increased pressure head to thereby recirculate the fluid back through the pump system, thus obviating damage to the system. Furthermore, should a valve downstream of the pump inadvertently be left closed, the bypass 44 will recirculate the pumped fluid.

The magnet 52, since it is slidably placed in a track, or the like, and located longitudinally along and adjacent to the flask 26, will tend to follow the piston since the wall of flask 26 is fabricated from non-magnetic material. The location of magnet 52 along the flask 26 indicates the position of piston 46, and accordingly indicates the amount of fluid that has entered the flask. The magnet may alternatively be placed in a channel or mounted upon a non-metallic rod.

After the sample has been obtained in the flask 26, the line valves 14 and 29, and safety valves 63, 63' are closed and the flask is disconnected at 27, 27' from pipe 10 and the pump 12, whereupon an empty flask may then be placed in service for the newly filled flask.

When the laboratory is ready to withdraw a portion of the fluid contained in the flask 26, a suitably excited coil may be placed peripherally about flask 26 and moved longitudinally up and down the flask, thereby carrying agitator 49 with it through magnetic attraction between the coil and agitator, thus mixing the sample contained in the flask.

When it is desired to return the flask 26 to service, valve 78 is opened and the excited coil (not shown) again placed about the flask and moved so as to place the piston 46 adjacent wall 50. The valve 78 is then closed and the flask is again ready to receive a sample.

In the embodiment illustrated by FIGURE 4, the flask 126 is preferably permanently installed adjacent a system to be sampled; as for example, a fluid carrying pipe line 10. Fluid conduit 25 operatively connects the system to a pump means 12 such as seen in FIGURE 1. After the sample flask 126 is filled with fluid from the conduit 10, the solenoid coil 128 may be suitably excited and moved longitudinally of the flask so as to move the perforated plate 149 between end walls 150 and 151 by the magnetic force exerted by solenoid coil 128 in order to blend the contents of the flask. Thereafter, valves 110, 263, and 264 are opened so as to fill laboratory sample flask 226 with a homogeneous fluid sample from chamber 148'. Transfer of liquid from chamber 148' into chamber 248 may be accomplished by using solenoid 128 to magnetically attract and move the barrier or piston 146 toward wall 150 thereby displacing the fluid from chamber 148' whereupon the fluid will flow through valve 110, quick disconnect 112, fluid conduit 114, T-connection at 261, quick disconnect 116, valve 263, and hence into chamber 248 thereby displacing piston 246 until it abuts wall 250. After filling sample flask 226, valves 264 and 263 are closed by using a suitable valve handle that mates with valve stem 265, 267 through apertures 266 and 268. Valve 110 is then closed, valve 178 opened and piston 146 returned to wall 150 through the means of the magnetic attraction of solenoid 128. Valve 178 is then closed and valves 163 and 163' opened whereupon the sample flask 126 begins to collect another fluid sample from fluid conduit 10 in accordance with the fluid flow from the double acting pump.

The action of the perforated plate 149 against the inside wall of the chamber 126 will remove or scrape any viscous material therefrom which will subsequently enter

into solution with the remaining fluid in the chamber 148' as the fluid is agitated by the mixer 149. The squeegee like action of the O-rings 147, 147' will remove any remaining fluid particles from the wall to accordingly present a clean chamber to the next incoming sample.

Where a predetermined quantity of fluid is desired to be transferred from flask 126 of FIGURE 4 into the laboratory flask 226, a graduated cylinder or burette 229 may be attached to quick disconnect 166 to enable a measured quantity of fluid to be displaced from chamber 248' by the equivalent quantity of sampled fluid entering chamber 248. Hence, the volume of fluid transferred to the burette is substantially equal to the volume of fluid transferred to laboratory flask 226.

Accordingly, while particular embodiments of this invention have been shown and described in detail herein, it will occur to those skilled in the art that various changes and modifications can be accomplished without departing either in spirit or scope from the invention as set forth in the appended claims.

What I claim as new and desire to secure by Letters Patent of the United States is:

1. A sampling device including a double acting pump and a flask, fluid conduits adapted to interconnect said pump and said flask to a fluid system to be sampled, said flask having opposed inlet and outlet ends connected by a flask wall, barrier means slidably located within and in sealing relationship with said flask wall and being movable from one to another said opposed ends, a check valve located in each said end having a spring biased ball check valve that normally permits flow in a single direction, means for selectively forcing said valve open to permit flow in an opposite direction to enable extraction of said sample, said fluid conduits including a branched inlet conduit for delivering fluid from the system to each action of said pump, a branched return outlet conduit for delivering fluid from said pump to said flask, and overload bypass means interconnecting the last said conduit with said inlet conduit.

2. The device of claim 1 wherein said flask is cylindrical, movable magnetic sensing means adjacent the outer container wall, said barrier means including a piston comprised of a magnet, said flask being fabricated from a non-magnetic material, whereby; said sensing means locates said piston to thereby gauge the amount of sample in said flask.

3. The device of claim 2 wherein said opposite end walls are connected together by a fluid carrying conduit having a valve therein, whereby; said piston is magnetically movable from one to an opposite said end wall in response to a magnetic force applied externally of said wall.

4. The device of claim 2 further including a magnetic perforated plate mounted for movement inside said wall and between said piston and said inlet end, whereby; said plate may be moved from said piston to said inlet wall in response to an external magnetic force to thereby agitate and mix the contents of said flask.

5. The device of claim 1 wherein said double acting pump includes a non-magnetic cylinder having opposite ends and an armature slidably located therein, solenoid coils located peripherally about said cylinder to impart translatory motion to said armature longitudinal of said cylinder upon energization of said coils, a pump head carried by each end of said cylinder and including an inlet check valve, an outlet check valve, a pumping cavity, and a piston sealingly and movably located in said cavity and operatively attached to said armature, said branched inlet conduit adapted to be connected at said inlet valve, said branched outlet conduit adapted to be connected at said outlet valves, whereby; alternate energization of said coils impart reciprocating motion to said pistons to move fluid from said system to said flask.

6. The apparatus of claim 5, and further including means forming an aperture through said armature, means

forming an adjustable rod mounted in each pump head and aligned with the first said aperture, each said adjustable rod extending into said armature aperture at an extreme end of travel of said armature to thereby provide a fluid cushioned stop.

7. The apparatus of claim 6 wherein one said adjustable rod has a reduced end portion so as to provide an adjustable orifice in conjunction with said armature aperture.

8. The invention of claim 1 wherein said check valve further includes a threaded base including a first passageway for housing said ball and spring, a body having a second passageway and received in said threaded base, a valve stem retainer received in said body and having means forming a centrally located aperture, a valve stem mounted for movement in and aligned with said first and second passageway and said aperture, fluid sealing means between said base, body, retainer, and stem, and a lateral passageway connecting said second passageway and forming an inlet means under normal operation as a check valve and forming an outlet means when said ball is upset by said stem.

9. A sampling system including fluid moving means connected to a fluid source to be sampled in a flask, fluid conduits adapted to connect said flask to said fluid moving means, said flask having opposed ends connected by a non-magnetic cylindrical wall, inlet means located in one said end and outlet means located in an opposed said end, magnetic piston means slidably located within and in sealing relationship with said cylindrical wall to form a first and second chamber, and means for moving said piston from one to the other said opposed ends to thereby enable said fluid moving means to fill said first chamber with fluid while displacing said piston from the inlet end to the outlet end; magnetic sensing means slidably located adjacent to and externally of said flask and movable in the same plane and direction as said piston for indicating the displacement of said piston from said inlet end, a perforated agitator slidably received in said first chamber whereby movement imparted to said agitator between the limits of said piston and said inlet wall will mix the fluid contents of said first chamber, and magnetic means for moving the agitator.

10. The device of claim 9 including a valve and a second flask;

means, including the last said valve, connecting said second flask to the first recited flask;

said second flask having end walls interconnected by a flask wall;

barrier means slidably located in sealing relationship with said second flask to thereby reciprocate between said end walls, whereby;

a laboratory sample may be transferred from said first flask into said second flask by moving the first said barrier means in a direction to provide flow through the last said valve and into said second flask.

11. A pump for use in sampling system comprising:

a non-magnetic housing having spaced detachable pump heads at each extremity; a pair of spaced solenoid coils peripherally wound about the outer periphery of said housing; an armature slidably received inside said housing and including two magnetic slugs spaced apart and integrally attached to a non-magnetic slug to thereby form a unitized armautre body; said armature having a length that is less than the length of the housing portion separating said pump heads from each other; one said magnetic slug being mis-aligned with one nearest adjacent said solenoid;

a pumping cavity centrally aligned with said pump head and said armature to form a cylinder that is adapted to receive a piston;

a piston slidably received in sealed relationship with said cylinder and adapted to reciprocate therein, means rigidly fastening said piston in each pump

head pumping cavity to the nearest adjacent said magnetic slug; inlet and outlet check valve means arranged in each said pump head and in fluid communication with said cavity to provide for one way flow through said pumping cavity at the free end of said piston;

a passageway longitudinally through said armature fluid connecting each extremity of said housing at said pump head; a rod adjustably mounted in each said pump head and aligned with said passageway, said rod having a diameter to permit close tolerance fit with said passageway; whereby: electrical energization of said solenoids causes longitudinal movement of said armature to thereby impart reciprocal motion to said piston and to thereby move a fluid through said pump heads, and; said rods cooperate with said passageway to form an adjustable fluid cushioned stop therewith.

12. A method of transferring a fluid from a pipeline or the like into a sample flask comprising:

(a) transferring a predetermined amount of fluid sample at a predetermined rate from said pipeline into a first flask;

(b) magnetically moving an agitator thus agitating the transferred sample to thereby provide a homogeneous fluid sample representative of the average fluid conditions of said flask;

(c) magnetically moving a piston to move a portion of the fluid from said first flask into a second flask to thereby provide a sample size suitable for laboratory determination;

(d) magnetically moving a second piston thus removing the contents of said second flask for laboratory analysis.

13. The method of sampling a fluid system, the steps comprising:

(a) transferring a predetermined amount of sample at a constant rate from said system to a first flask;

(b) agitating the accumulated sample in said flask to provide a homogeneous fluid sample representative of the average fluid contained in said system during step (a);

(c) withdrawing a portion of the fluid from the flask to provide a sample for laboratory analysis,

(d) providing said flask with an internal magnetically movable wall to thereby form a chamber having a variable volume equal to the volume of sample accumulated at a given time interval;

(e) transferring said withdrawn accumulated sample from said flask to a second flask;

(f) providing said second flask with a movable wall that maintains the volume of said second flask equal to the volume of the withdrawn fluid, whereby;

(g) said second flask may be used to obtain a sample from said first flask for laboratory determination.

14. The method of claim 13 and further including the steps of magnetically moving the movable wall of said first and second flask by an external magnetic field.

References Cited

UNITED STATES PATENTS

2,260,419	10/1941	Wrightsman	73—422
2,446,657	8/1948	MacLeod et al.	92—5
2,636,387	4/1953	McKinney	73—422
2,637,211	5/1953	Norman	73—422
3,282,219	11/1966	Blackwell et al.	103—53

DAVID SCHONBERG, *Primary Examiner.*

S. C. SWISHER, *Examiner.*

United States Patent [19]

Miyamoto

[11] **Patent Number: 4,488,477**

[45] **Date of Patent: Dec. 18, 1984**

[54] **RODLESS CYLINDER**

[75] Inventor: **Michikazu Miyamoto, Soka, Japan**

[73] Assignee: **Shoketsu Kinzoku Kogyo Kabushiki Kaisha, Tokyo, Japan**

[21] Appl. No.: **436,367**

[22] Filed: **Oct. 25, 1982**

[30] **Foreign Application Priority Data**

Nov. 19, 1981 [JP] Japan ..... 56-172476[U]

[51] Int. Cl.³ F01B 11/02

[52] U.S. Cl. ..... 92/85 R; 92/255; 91/DIG. 4; 60/545

[58] Field of Search ..... 91/1, DIG. 4; 92/51, 92/52, 5 R, 85 R, 255; 200/81.9 M, 82 E, 83 L; 60/545; 335/302, 306, 288

[56] **References Cited**

U.S. PATENT DOCUMENTS

2,983,840 5/1961 Van Iperen 335/302

FOREIGN PATENT DOCUMENTS

634420 1/1962 Canada ..... 92/85 R

1317105 5/1973 United Kingdom 91/DIG. 4

Primary Examiner—Robert E. Garrett

Assistant Examiner—Scott L. Moritz

Attorney, Agent, or Firm—Oblon, Fisher, Spivak, McClelland & Maier

[57] **ABSTRACT**

A rodless cylinder having a piston and an operation member slidable along the outer circumferential surface of a cylinder tube, each mounted with permanent magnets, and adapted to move the operation member along the cylinder tube by utilizing the attraction force between these permanent magnets, in which a plurality of individual magnets disposed axially to the cylinder in each of driving and driven magnet rows are arranged such that identical poles of the individual magnets are in adjacent to each other, and both of the driving and driven magnet rows are arranged such that the different poles of the individual magnets in each of the magnet rows are opposed to each other can provide a greater attraction force between the magnet rows with no changes in the size of the magnet and thereby reduce the size of the entire apparatus.

7 Claims, 4 Drawing Figures

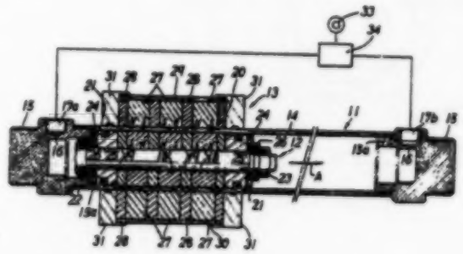

FIG. 1 PRIOR ART

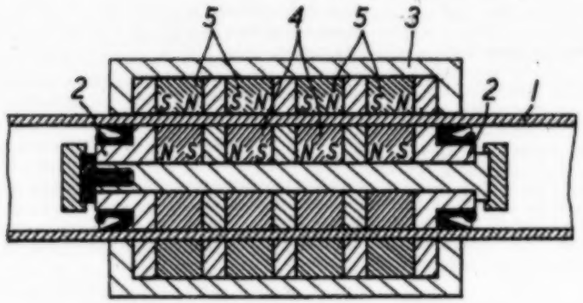

FIG. 4

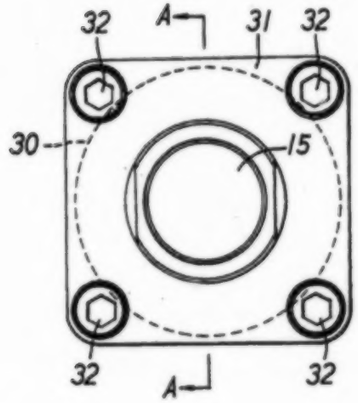

FIG. 2

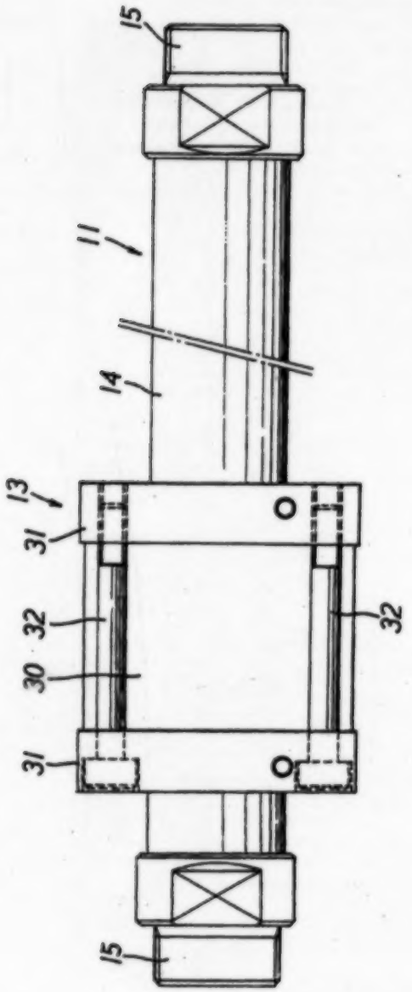

FIG. 3

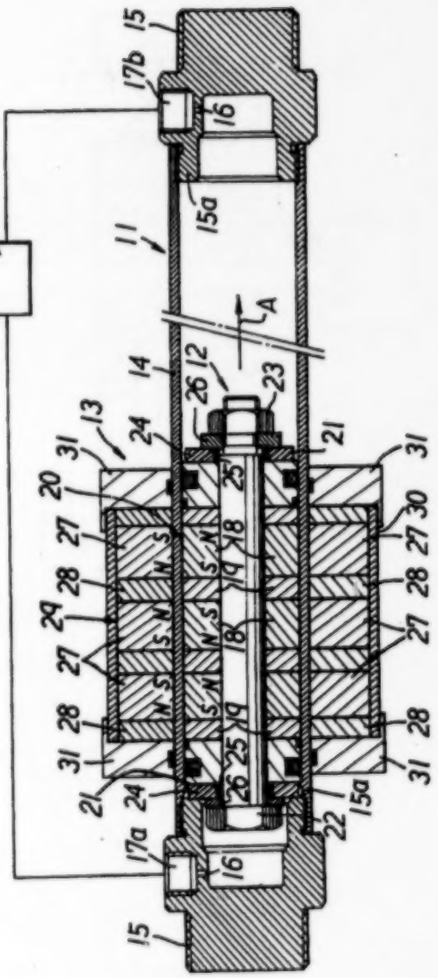

RODLESS CYLINDER

BACKGROUND OF THE INVENTION

(1) Field of the Invention

This invention concerns a rodless cylinder.

(2) Description of the Prior Art

Cylinder apparatus in which a piston driven within a cylinder tube by the pressure of a fluid introduced therein have often been utilized generally. In the cylinder apparatus of this type, a rod mounted to the piston is extended from one end of a cylinder tube externally and a load is connected to the top end of the rod. However, in a state where the rod is projected to its extreme stroke end out of the cylinder tube, the entire length including the rod and the cylinder tube is approximately twice as long as the rod stroke. Thus, the cylinder apparatus of this type requires a relatively large installation space as compared with the stroke of the piston rod.

In view of the above, a so-called rodless cylinder has been developed as disclosed in Japanese Patent Publication No. 25034/1980 filed in Japan based on British Patent Application No. 4890/1971, in which a piston and an operation member slidion along the outer circumferential surface of a cylinder tube are mounted with permanent magnets respectively and the operation member is moved along the cylinder tube by utilizing the attraction force between the permanent magnets. FIG. 1 shows a schematic structure of the rodless cylinder, wherein a piston 2 disposed in a cylinder tube 1 and an operation member 3 fitted over the outer circumferential surface of the cylinder tube 1 are respectively mounted with magnet rows each consisting of a plurality of permanent magnets 4, 4, . . . and 5, 5, . . . arranged side by side and the different poles of the individual magnets in each of the magnet rows are opposed to each other respectively, so that the operation member is moved by the attraction force between the permanent magnets 4 and 5 following after the movement of the piston 2 driven by the pressure of a fluid. By the way, in the rodless cylinder as described above, the magnets 4 and 5 are arranged in the axial direction of the cylinder tube 1 with the different poles of the individual magnets in each of the magnet rows being adjacent to each other. Accordingly, it is necessary to increase the magnetic force, i.e., the size, or the number of the magnets constituting the magnet row in order to enhance the attraction of holding force between the magnet rows. This, however, increases the size and the cost of the entire apparatus, which is contrary to the essential purpose of the rodless cylinder of reducing the apparatus size.

BRIEF SUMMARY OF THE INVENTION

Accordingly, it is an object of this invention to provide a rodless cylinder capable of obtaining a greater attraction force between a driving magnet row mounted to a piston and a driven magnet row disposed to the outer circumferential surface of a cylinder tube with no changes in the size and the number of the magnets by providing an adequate pole arrangement for the individual magnets in each of the driving and driven magnet rows.

Another object of this invention is to provide a rodless cylinder capable of obtaining a greater attraction force between the driving magnet row and the driven magnet row, which enables the use of small-sized magnets, thereby reducing the size and the cost of the apparatus.

A further object of this invention is to provide a rodless cylinder in which the driven magnet row can surely move following after the movement of the driving magnet row by a greater attraction force between the driving magnet row and the driven magnet row.

Other objects and aspects of this invention will become clearer by reading the following explanations for preferred embodiments of this invention in conjunction with the appended drawings.

The above objects can be attained by the rodless cylinder in accordance with this invention, in which a driving member driven within a cylinder in a axial direction by the pressure of a fluid is constituted by mounting a driving magnet row to a piston sliding in the cylinder and a driven member disposed to the outer circumference of the cylinder axially slidably is mounted with a driven magnet row, wherein a plurality of individual magnets disposed axially to the cylinder in each of the magnet rows are arranged such that the identical poles of the individual magnets are in adjacent to exch other, and each of the magnet rows are arranged such that the different poles of the individual magnets are opposed to each other.

BRIEF DESCRIPTION OF THE DRAWINGS

FIG. 1 is a cross sectional view for a part of a conventional rodless cylinder,

FIG. 2 is a side view for a preferred embodiment according to this invention,

FIG. 3 is a cross sectional view taken along the line A—A in FIG. 4, and

FIG. 4 is an end view of the rodless cylinder shown in FIG. 2.

DESCRIPTION OF THE PREFERRED EMBODIMENT

This invention is to be described specifically by way of its preferred embodiment referring to the drawings. In FIG. 2 through FIG. 4 are shown a cylinder 11, a pistonlike driving member 12 inserted fittedly to the inside of the cylinder 11 axially slidably and a driven member 13 which moves following after the movement of the driving member 12.

The cylinder 11 comprises a cylinder tube 14 made of non-magnetic material such as aluminum and head covers 15, 15 threadingly secured to the both ends thereof. Each head cover 15 is perforated with charge and discharge ports 17*a*, 17*b* for high pressure fluid in communication with the inside of the cylinder tube 14 by way of through holes 16.

The driving member 12 is adapted to reciprocate axially within the cylinder by the pressure of a high pressure fluid charged and discharged to and from the charge and discharge ports 17*a*, 17*b* in the head covers 15, 15. The driving member 12 comprises a driving magnet row 20 formed by alternately arranging a plurality of permanent magnets 18, 18, . . . and yokes 19, 19, . . . each with a central aperture, which are put between a pair of pistons 21, 21 and integrated, by being clamped with a bolt 22 inserted through the central apertures and a nut 23, together with dampers 24, 24 for abutting against stoppers 15*a* situated on the stroke ends within the cylinder, damper washers 25, 25 for restricting the compression of the dampers and flat washers 26, 26 abutting against the surface of the dampers for holding the same.

The driven member 13 in the form of a ring is inserted over the outer circumference of the cylinder tube 14 axially slidably and it comprises a driven magnet row 29 formed by alternately disposed a plurality of ring-like permanent magnets 27, 27, . . . and yokes 28, 28, . . . which are covered by a tube 30 at the outer circumference of the magnet row and fitted with a pair of fixing covers 31, 31 at the both ends of the tube 30 and integrated by being clamped with a bolts 32 inserted between the fixing covers 31, 31.

In each of the magnet rows 20 and 29, individual permanent magnets 18, 27 are arranged axially to the cylinder 11 such that the identical poles of the individual magnets are in adjacent to each other. The magnet rows 20 and 29 are arranged such that the different poles of the corresponding magnets 18 and 27 in each of the rows are opposed radially to each other by way of the cylinder tube 14.

Specifically, in the driving magnet row 20, a plurality of individual permanent magnets 18, 18 are arranged in the adverse direction alternately so that their identical poles S, S and N, N are adjacent to each other. In the driven magnet row 29, a plurality of individual magnets 27, 27, . . . corresponding in the number to that in the driving magnet row are arranged such that their identical poles S, S and N, N are adjacent to each other. Further, the driving magnet row 20 and the driven magnet row 29 are arranged such that the N poles of the individual magnets in the driving magnet row 20 are opposed to the S poles of the individual magnets in the driven magnet row 29 and S poles of the individual magnets in the driving magnet row 20 are opposed to the N poles of the individual magnets in the driven magnet row 29 respectively.

In the drawing, also shown are a pressurized fluid source 33, and a switching valve 34 that switchingly supplies a pressurized fluid from the pressurized fluid source 33 to either one of the charge and discharge ports 17*a*, 17*b* in the head cover 15 and discharges the pressurized fluid from the other of the charge and discharge ports to the outside.

In the rodless cylinder having a constitution as described above, when a high pressure fluid is supplied from the charge and discharge port 17*a* to the cylinder 11 at the switching position shown in FIG. 3, the driving member 12 moves in the direction of the arrow A while discharging the fluid on the opposite side in the inside of the cylinder 11 through the other charge and discharge port 17*b*, whereby the driven member 13 moves by the attraction force between both of the magnet rows 20 and 29 following after the movement of the driving member 12. Alternately, when a high pressure fluid is supplied to the charge and discharge port 17*b*, the driving member 12 and the driven member 13 can be driven in the opposite direction.

In the rodless cylinder of the illustrated embodiment, since the magnets 18, 27 in the magnet rows 20, 29 are arranged respectively so that the identical pole of the individual magnets are adjacent to each other in each of the rows, the attraction force between both of the magnet rows 20 and 29 can be made remarkably greater as compared with that of the embodiment shown in FIG. 1, wherein the different poles for the magnets 4, 4, . . . and 5, 5, . . . are adjacent to each other in the axial direction in each of the magnet rows at the inside and the outside of the cylinder 1.

Table I shows the results of the measurement for the difference in the attraction force between the magnet rows in each of three types of rodless cylinders having the same basic structure, with respect to the case where the magnets are arranged according to this invention and in the case where the magnets are arranged in the conventional manner as shown in FIG. 1. As apparent from the Table I, the magnet arrangement according to this invention can increase the attraction force between the magnet rows approximately five times as large as that of the embodiment shown in FIG. 1.

TABLE I

	Arrangement (in this invention)	Arrangement (in the prior embodiment)
Cylinder I	13.6 (kgf)	2.35 (kgf)
Cylinder II	13.4	2.33
Cylinder III	13.0	2.25

As stated above, the attraction force between the magnet rows can be increased significantly by the rodless cylinder according to this invention, in a simple structure wherein a plurality of individual magnets are arranged appropriately, in each of the driving magnet row mounted to the piston disposed to the inside of the cylinder and the driven magnet row disposed to the outside of the cylinder.

What is claimed is:

1. A rodless cylinder, in which a driving member driven within a cylinder in the axial direction by the pressure of a fluid is constituted by mounting a driving magnet row to a piston sliding in said cylinder and a driven member disposed to the outer circumference of said cylinder axially slidably is mounted with a driven magnet row, wherein a plurality of individual magnets disposed axially to the cylinder in each of said magnet rows are arranged such that the identical poles of said individual magnets are adjacent to each other, and each of said magnet rows are arranged such that the different poles of said individual magnets are opposed to each other.

2. The rodless cylinder as defined in claim 1, wherein said driving magnet row is formed by alternately arranging a plurality of driving magnets and yokes having central apertures perforated therein respectively and said driven magnet row is formed by alternately arranging a plurality of ring-like driven magnets and yokes.

3. The rodless cylinder as defined in claim 1, wherein said driving magnet row comprises a plurality of permanent magnets which are arranged so that the individual magnets are disposed with their identical poles, that is, S, S and N, N being adjacent to each other respectively, and said driven magnet row also comprises a plurality of permanent magnets corresponding in number to that of said driving magnet row which are arranged so that the individual magnets are disposed with their identical poles, that is, S, S and N, N being in adjacent to each other respectively, and in which said driving magnet row and the driven magnet row are arranged such that the N poles of the individual magnets in one of the magnet rows correspond to the S poles of the individual magnets in the other of the magnet rows respectively while the S poles in the individual magnets in one of the magnet rows correspond to the N poles of the individual magnets in the other of the magnet rows respectively.

4. The rodless cylinder as defined in claim 1, wherein said driving magnet row is put between a pair of pistons and they are integrated together with dampers abutting against stoppers situated at the stroke ends in the cylinder by being clamped with a bolt inserted through central apertures in said individual magnets.

5. The rodless cylinder as defined in claim 1, wherein the driven magnet row is covered at the outer periphery thereof with a tube the axial length of which corresponds to the axial length of said driven magnet row, wherein said driven magnet row is fitted with a pair of cup-shaped fixing covers on both ends of said tube, each end of said driven magnet row and said tube being received in one of said cup-shaped covers, and wherein said driven magnet row, said tube, and said cup-shaped fixing covers are integrated by being clamped with a plurality of bolts inserted between said fixing covers.

6. The rodless cylinder as defined in claim 4, wherein said cylinder is fitted with a head cover at either end thereof, said head covers contain inwardly directed axial recesses which receive the ends of said bolt at the stroke ends, and said stoppers project axially inwardly from said head covers radially outwardly of said axial recesses.

7. A rodless cylinder having a cylinder, a driving member which is assembled with a piston and a driving magnet row slidably disposed in said cylinder and movable therein by a pressurized fluid along the axial direction of said cylinder, and a driven member which has a driven magnet row surrounding the outer periphery of said cylinder, each of said driving and driven magnet rows comprising a plurality of individual permanent magnets juxtaposed along the cylinder axis, characterized in that axially adjacent pairs of permanent magnets in each row are arranged to face identical poles in the axially adjacent magnets, thereby turning lines of magnetic force substantially perpendicularly to the cylinder axis, while radially opposed pairs of magnets are arranged to face different poles, thereby preventing independent movements of said rows, whereby said driven member stably follows the movement of said driving member.

* * * * *

REEXAMINATION CERTIFICATE (1428th)

United States Patent [19] [11] **B1 4,488,477**

Miyamoto [45] Certificate Issued **Mar. 12, 1991**

[54] **RODLESS CYLINDER**

[75] Inventor: **Michikazu Miyamoto, Soka, Japan**

[73] Assignee: **Shoketsu Kinzoku Kogyo Kabushiki Kaisha, Japan**

Reexamination Request:
No. 90/001,910, Dec. 18, 1989

Reexamination Certificate for:

Patent No.:	4,488,477
Issued:	Dec. 18, 1984
Appl. No.:	436,367
Filed:	Oct. 25, 1982

[30] **Foreign Application Priority Data**

Nov. 19, 1981 [JP] Japan 56-172476

[51] Int. Cl.³ F01B 11/02

[52] U.S. Cl. ..... 92/85 R; 92/255; 91/DIG. 4; 60/545

[58] Field of Search ..... 91/1, DIG. 4; 92/51, 92/52, 5 R, 85 R, 255; 200/81.9 M, 82 E, 83 L; 60/545; 335/302, 306, 288; 417/418

[56] **References Cited**

U.S. PATENT DOCUMENTS

3,779,401	12/1973	Carroll .
4,207,807	6/1980	Takata et al. .
4,231,722	11/1980	Teichmann .

FOREIGN PATENT DOCUMENTS

47-19164	6/1972	Japan .
48-5333	2/1973	Japan .
53-154988	12/1978	Japan .
2045389	10/1980	United Kingdom .

Primary Examiner—Edward Look

[57] **ABSTRACT**

A rodless cylinder having a piston and an operation member slidable along the outer circumferential surface of a cylinder tube, each mounted with permanent magnets, and adapted to move the operation member along the cylinder tube by utilizing the attraction force between these permanent magnets, in which a plurality of individual magnets disposed axially to the cylinder in each of driving and driven magnet rows are arranged such that identical poles of the individual magnets are in adjacent to each other, and both of the driving and driven magnet rows are arranged such that the different poles of the individual magnets in each of the magnet rows are opposed to each other can provide a greater attraction force between the magnet rows with no changes in the size of the magnet and thereby reduce the size of the entire apparatus.

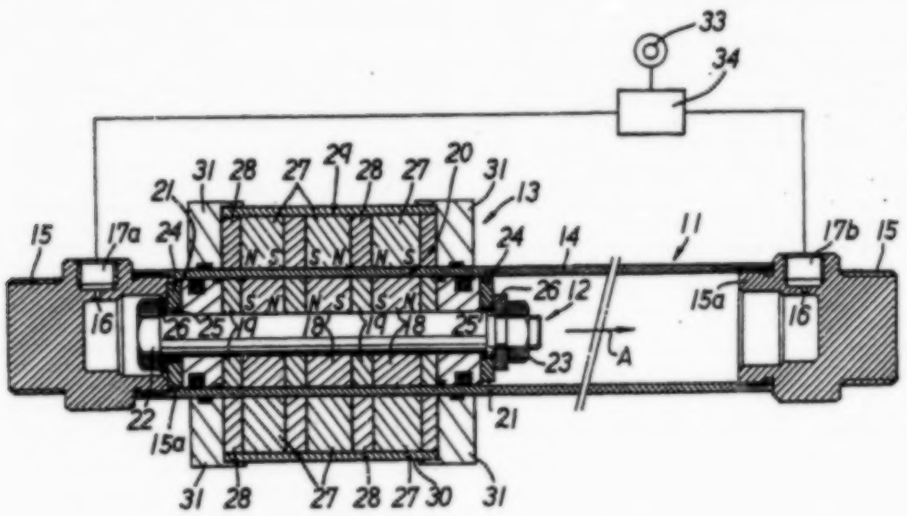

FIG. 1 *PRIOR ART*

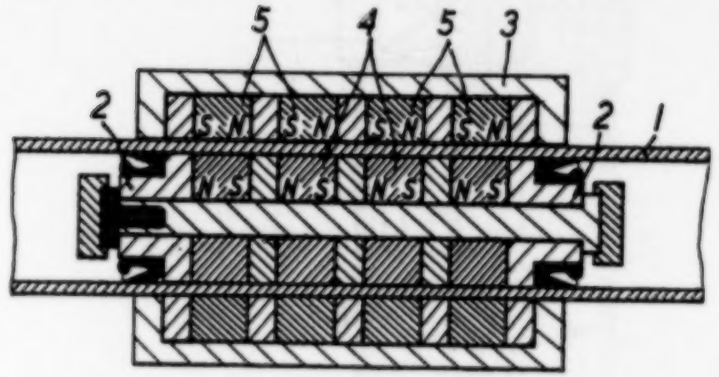

FIG. 4

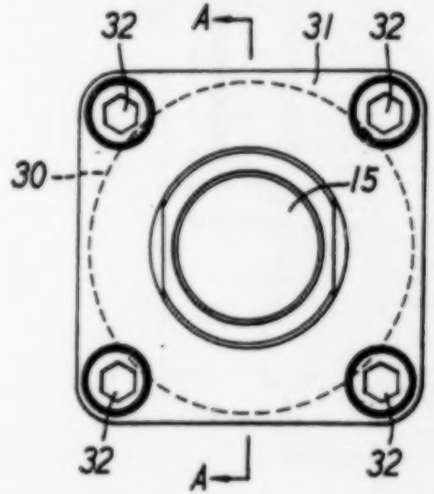

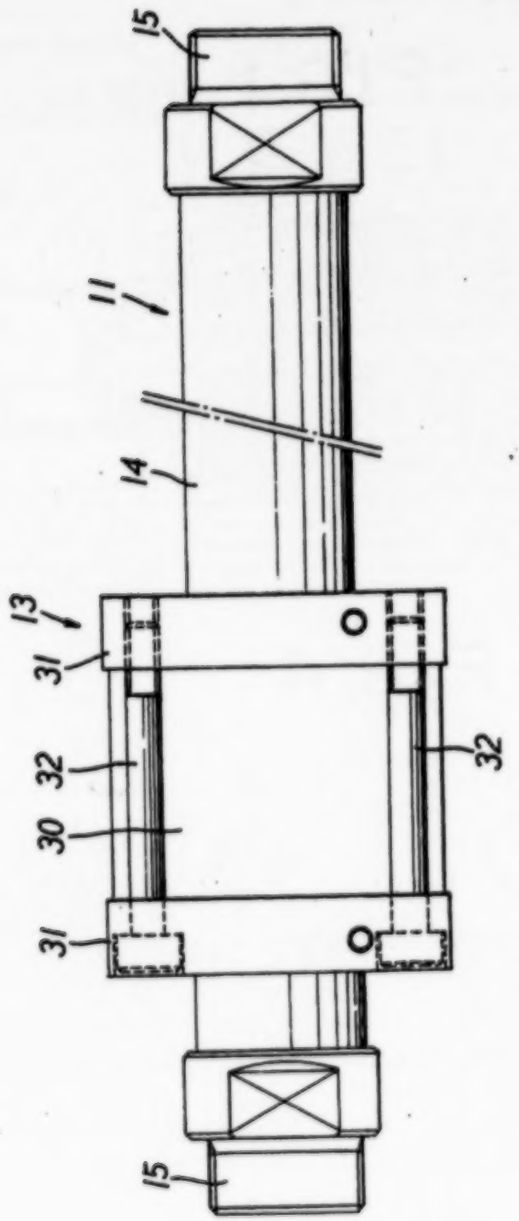
15
11
14
13
31
32
30
31
32
15

FIG. 2

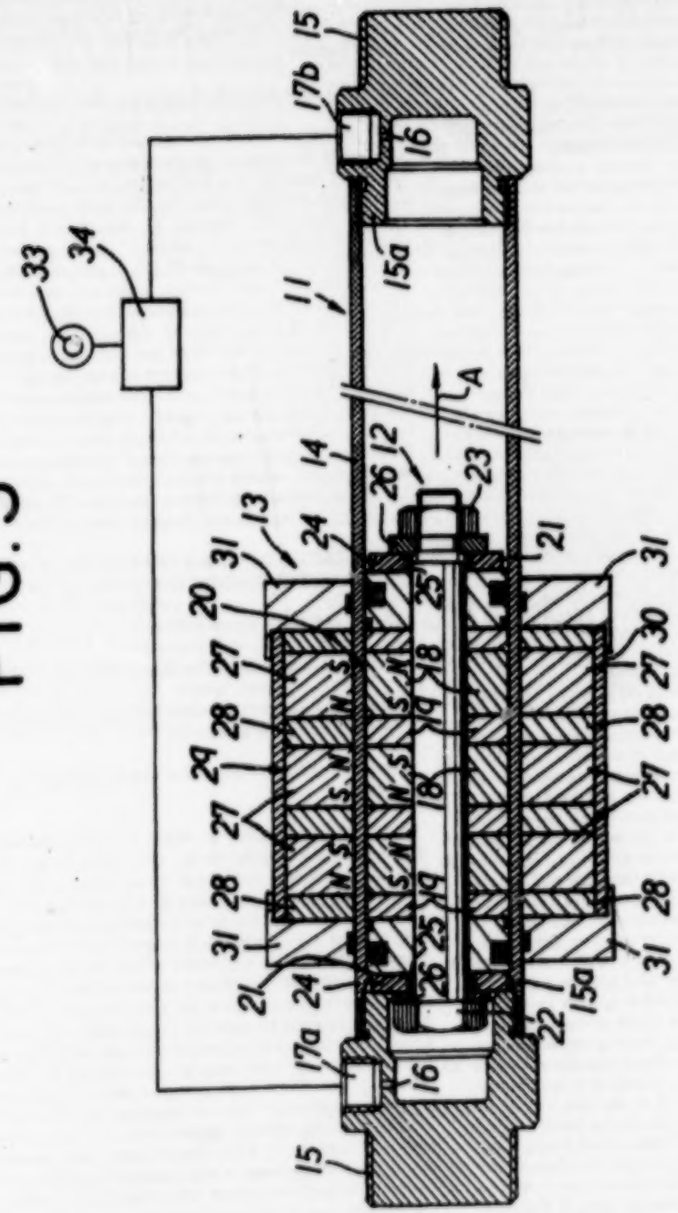
15
17b
16
15a
11
33
34
A
14
12
26
23
13
24
21
31
20
25
27
30
28
29
18
19
22
17a
15

FIG. 3

REEXAMINATION CERTIFICATE ISSUED UNDER 35 U.S.C. 307

THE PATENT IS HEREBY AMENDED AS INDICATED BELOW.

Matter enclosed in heavy brackets [ ] appeared in the patent, but has been deleted and is no longer a part of the patent; matter printed in italics indicates additions made to the patent.

ONLY THOSE PARAGRAPHS OF THE SPECIFICATION AFFECTED BY AMENDMENT ARE PRINTED HEREIN.

Amend the paragraph beginning at line 12 of column 2:

The above objects can be attained by the rodless cylinder in accordance with this invention, in which a driving member driven within a cylinder in a axial direction by the pressure of a fluid is constituted by mounting a driving magnet row to a piston sliding in the cylinder and a driven member disposed to the outer circumference of the cylinder axially slidably is mounted with a driven magnet row, wherein a plurality of individual magnets disposed axially to the cylinder in each of the magnet rows are arranged such that the identical poles of the individual magnets are in adjacent to each other, and each of the magnet rows are arranged such that the different poles of the individual magnets are opposed to each other. *The driving magnet row is put between a pair pistons and integrated together. Dampers abut against stoppers situated at the stroke ends in the cylinder by being clamped with a bolt inserted through central apertures in the individual magnets. The cylinder is fitted with a head cover at either end thereof. The head covers contain inwardly directed axial recesses which receive the ends of the bolt at the stroke ends. The stoppers project axially inwardly from the head covers at locations radially outwardly of the axial recesses.*

According to another feature of the invention, the rodless cylinder comprises an elongated cylinder formed of a non-magnetic material, head covers releasably connected to two axial ends of said cylinder, each of said head covers comprising an inwardly directed axial recess, an annular stopper projecting axially inwardly from said head cover at a position radially outward of said axial recess, and a port for supplying a pressurized fluid to the cylinder via the axial recess. A driving member fitted in the cylinder and movable in the cylinder in the axial direction thereof includes an alternating plurality of permanent magnets and yokes, the permanent magnets of the driving member being arranged such that identical poles of adjacent magnets face one another, a threaded rod passing through central apertures of the permanent magnets and yokes of the driving member, a pair of pistons secured to opposite ends of the plurality of magnets and yokes of the driving member by the threaded rod, and a pair of flat ring shaped dampers fitted to the driving member adjacent opposite axial ends thereof, the dampers extending axially to a position such that each of the dampers abuts a respective one of the stoppers when an axial end of the driving member enters the axial recess at an end of a stroke of the driving member, so that an area of contact between the dampers and stoppers is radially outside of the cylinder and is movable along the cylinder in the axial direction thereof. The driven member includes an alternating plurality of permanent magnets and yokes in radial alignment with the permanent magnets and yokes of the driving member, the magnets of the driven member being arranged such that identical poles of adjacent magnets face one another and such that radially aligned pairs of magnets of the driving and driven members have opposite poles in opposed alignment with each other, as well as a tube covering the outer circumference of the magnets and yokes of the driving member, and means for axially clamping the magnets and yokes of the driven member.

Amend the paragraph beginning at line 53 of column 2.

The driving member 12 is adapted to reciprocate axially within the cylinder by the pressure of a high pressure fluid charged and discharged to and from the charge and discharge ports 17a, 17b in the head covers 15, 15. The driving member 12 comprises a driving magnet row 20 formed by alternately arranging a plurality of permanent magnets 18, 18, . . . and yokes 19, 19, . . . each with a central aperture, which are put between a pair of pistons 21, 21 and integrated, by being clamped with a bolt 22 (*i.e., a type of threaded rod*) inserted through the central apertures and a nut 23, together with dampers 24, 24 for abutting against stoppers 15a situated on the stroke ends within the cylinder *when the end of the driving member 12 enters an axial recess in the head cover 15 at the end of a stroke*, damper washers 25, 25 for restricting the compression of the dampers and flat *ring shaped* washers 26, 26 abutting against the surface of the dampers for holding the same. *The stoppers 15a are located radially outside of the axial recesses.*

AS A RESULT OF REEXAMINATION, IT HAS BEEN DETERMINED THAT:

Claims 4, 6 and 7 are cancelled.

Claim 1 is determined to be patentable as amended.

Claims 2, 3 and 5, dependent on an amended claim, are determined to be patentable.

New claims 8 and 9 are added and determined to be patentable.

1. A rodless cylinder, in which a driving member driven within a cylinder in the axial direction by the pressure of a fluid is constituted by mounting a driving magnet row to a piston sliding in said cylinder and a driven member disposed to the outer circumference of said cylinder axially slidably is mounted with a driven magnet row, wherein a plurality of individual magnets disposed axially to the cylinder in each of said magnet rows are arranged such that the identical poles of said individual magnets are adjacent to each other, and each of said magnet rows are arranged such that the different poles of said individual magnets are opposed to each other [.], *wherein said driving magnet row is put between a pair of pistons and they are integrated together with dampers abutting against stoppers situated at the stroke ends in the cylinder by being clamped with a bolt inserted through central apertures in said individual magnets, and wherein said cylinder is fitted with a head cover at either end thereof, said head covers contain inwardly directed axial recesses which receive the ends of said bolt at the stroke ends, and said stoppers project axially inwardly from said head covers radially outwardly of said axial recesses.*

8. A rodless cylinder, comprising:

an elongated cylinder formed of a non-magnetic material;

head covers releasably connected to two axial ends of said cylinder, each of said head covers comprising an inwardly directed axial recess, an annular stopper projecting axially inwardly from said head cover at a position radially outward of said axial recess, and a port for supplying a pressurized fluid to said cylinder via said axial recess;

a driving member fitted in said cylinder and movable in said cylinder in the axial direction thereof, said driving member comprising:

(a) an alternating plurality of annular permanent magnets and yokes, said permanent magnets of said driving member being arranged such that identical poles of adjacent magnets face one another,

(b) a threaded rod passing through central apertures of said permanent magnets and yokes of said driving member,

(c) a pair of pistons secured to opposite ends of said plurality of magnets and yokes of said driving member by said threaded rod, and

(d) a pair of flat ring shaped dampers fitted to said driving member adjacent opposite axial ends thereof, said dampers extending axially to a position such that each of said dampers abuts a respective one of said stoppers when an axial end of said driving member enters said axial recess at an end of a stroke of said driving member, whereby an area of contact between said dampers and said stoppers is radially outside of said threaded rod; and

a driven member fitted to the outside of said cylinder and movable along said cylinder in the axial direction thereof, said driven member comprising:

(e) an alternating plurality of annular permanent magnets and yokes in radial alignment with said permanent magnets and yokes of said driving member, said magnets of said driven member being arranged such that identical poles of adjacent magnets face one another and such that radially aligned pairs of magnets of said driving and driven members have opposite poles in opposed alignment with each other,

(f) a tube covering the outer circumference of said magnets and yokes of said driven member, and

(g) means for axially clamping said magnets and yokes of said driven member.

9. A rodless cylinder having a driving member, including a plurality of driving magnets, reciprocable within said cylinder in response to the fluid pressure therein, and a driven member, including a plurality of driven magnets, mounted externally of said cylinder for reciprocable movement in response to the movement of said driving member, wherein the driving magnets are disposed within, and extend side-by-side lengthwise of, said cylinder and are arranged so that the adjacent poles of adjacent driving magnets are identical; wherein the driven magnets are disposed externally of said cylinder and extend side-by-side lengthwise thereof, and are arranged so that the adjacent poles of adjacent driven magnets are identical but are of opposite polarity to the corresponding poles of the driving magnets adjacent thereto within the cylinder; wherein adjacent driving magnets and adjacent driven magnets are both separated, respectively, by yokes; wherein said cylinder is closed at each end by head covers each of which is provided with charge and discharge ports for high pressure fluid; wherein said driven member comprises a tube spaced from and mounted freely around the outer circumference of the cylinder so as to be axially slidable relative thereto; wherein said driving member also comprises a pair of pistons between which said driving magnets and separating yokes are clamped by bolt means; wherein a disk-shaped damper is clamped by said bolt means against the outer end of each piston for abutting against annular stoppers situated at the stroke ends of the driving members in said cylinder, said stoppers being provided on the inner ends of said head covers and forming substantially planar abutment surfaces for abutment by the peripheral portions of the outer faces of said dampers; and wherein said head covers are recessed to receive the lengths of said bolt means which project outwardly of said outer faces of said dampers when said driving member is at said stroke ends.

* * * * *

AUG 31 2001

Supreme Court, U.S.
FILED
AUG 31 2001

No. 00-1543

In the Supreme Court of the United States

OCTOBER TERM, 2000

FESTO CORPORATION,

Petitioner,

v.

SHOKETSU KINOZOKU KOGYO KABUSHIKI CO., LTD., A/K/A SMC CORPORATION AND SMC PNEUMATICS, INC.,

Respondents.

On Writ of Certiorari to the United States Court of Appeals for the Federal Circuit

BRIEF FOR PETITIONER

ANDREW L. FREY
DONALD M. FALK
ROBERT L. BRONSTON
Mayer, Brown & Platt
1909 K Street, N.W.
Washington, D.C. 20006
(202) 263-3000

ROBERT H. BORK
Counsel of Record
Suite 1000
1150 17th Street, N.W.
Washington, D.C. 20036
(202) 862-5851

CHARLES R. HOFFMANN
GERALD T. BODNER
GLENN T. HENNEBERGER
ANTHONY E. BENNETT
Hoffmann & Baron, LLP
6900 Jericho Turnpike
Syosset, New York 11791
(516) 822-3550

Counsel for Petitioner

AUGUST 31, 2001

63 pp

QUESTIONS PRESENTED

1. Whether every claim narrowing amendment designed to comply with any requirement of the Patent Act — including those not related to prior art — automatically creates prosecution history estoppel.

2. Whether every finding of prosecution history estoppel completely bars every application of the doctrine of equivalents.

RULE 29.6 STATEMENT

Petitioner Festo Corporation is a subsidiary of Festo AG. There are no subsidiaries or affiliates of Festo Corporation that have issued shares to the public.

TABLE OF CONTENTS

Page

QUESTIONS PRESENTED ..... (I)

RULE 29.6 STATEMENT ii

TABLE OF AUTHORITIES vi

OPINIONS BELOW 1

JURISDICTION 1

STATUTORY PROVISIONS INVOLVED 1

STATEMENT OF THE CASE 1

A. The Patent Application Process 2

B. The Prosecution of the Rodless Cylinder Patents 5

1. Prosecution History of the Stoll Patent 5

2. Prosecution History of the Carroll Patent 8

C. Prior Proceedings 8

1. District Court 8

2. Initial Appeal and Decision on Remand 9

3. The En Banc Decision 10

SUMMARY OF ARGUMENT 15

TABLE OF CONTENTS — Continued

Page

ARGUMENT 18

I. THIS COURT SHOULD ADHERE TO ITS TRADITIONAL UNDERSTANDING OF THE REACH OF PROSECUTION HISTORY ESTOPPEL 19

A. Prosecution History Estoppel Limits the Doctrine of Equivalents Only When Subject Matter Has Been Surrendered In Order To Render The Claimed Subject Matter Patentable. 21

1. The Federal Circuit's rule is wholly inconsistent with the way this Court has applied prosecution history estoppel. 24

2. The Federal Circuit Unjustifiably Expanded The Presumption Recognized in *Warner-Jenkinson* 29

B. Prosecution History Estoppel Does Not Completely Bar Every Possible Range of Equivalents for an Amended Claim Element 32

II. THE FEDERAL CIRCUIT'S NEW RULES ACCOMPLISH NOTHING USEFUL BUT ARE BOUND TO COMPLICATE PATENT PROSECUTION AND LITIGATION. 38

TABLE OF CONTENTS — Continued

Page

III. THE FEDERAL CIRCUIT'S RULES WOULD SERIOUSLY DAMAGE THE PATENT SYSTEM AND ENACT HARMFUL PUBLIC POLICY.... 42

CONCLUSION 45

TABLE OF AUTHORITIES

Page(s)

Cases:

Black & Decker v. *Hoover Service Center*, 886 F.2d 1285 (Fed. Cir. 1989) 27

Davis v. *Wakelee*, 156 U.S. 680 (1895) 22

Exhibit Supply Co. v. *Ace Patents Corp.*, 315 U.S. 126 (1942) 25

Fay v. *Cordesman*, 109 U.S. 408 (1883) 23, 34

Goodyear Dental Vulcanite Co. v. *Davis*, 102 U.S. 222 (1880) 23, 34

Graham v. *John Deere Co.*, 383 U.S. 1 (1966) 16, 26

Graver Tank & Manufacturing Co. v. *Linde Air Products Co.*, 339 U.S. 605 (1950) ..... *passim*

Hi-Life Products Inc. v. *American Nat'l Water-Mattress Corp*, 842 F.2d 323 (Fed. Cir. 1988) 27

Hubbell v. *United States*, 179 U.S. 77 (1900) 26

Hurlbut v. *Schillinger*, 130 U.S. 456 (1889) 33

Hughes Aircraft Co. v. *United States*, 140 F.3d 1470 (Fed. Cir. 1998) 11

Keystone Driller Co. v. *Northwest Engineering Corp.*, 294 U.S. 42 (1935) 21, 25

TABLE OF AUTHORITIES — Continued

Page(s)

Mannesmann Demag Corp. v. *Engineered Metal Prods. Co.*, 793 F.2d 1279 (Fed. Cir. 1986) 27

Moeller v. *Ionetics, Inc.*, 749 F.2d 653 (Fed. Cir. 1986) .. 27

O'Reilly v. *Morse*, 15 How. (56 U.S.) 62 (1853) 20

Odiorne v. *Winkley*, 18 F. Cas. 581 (C.C.D. Mass. 1814) 20

Royal Typewriter Co. v. *Remington Rand*, 168 F.2d 691 (2d Cir. 1948) 22

Sargent v. *Hall Safe & Lock Co.*, 114 U.S. 63 (1885) 23

Seymour v. *Osborne*, 78 U.S. (11 Wall.) 516 (1870) 35

Shepard v. *Carrigan*, 116 U.S. 593 (1886) 34

Smith v. *Magic City Kennel Club, Inc.*, 282 U.S. 784 (1931) 25, 26

Sperry v. *Florida Ex Rel. Florida Bar*, 373 U.S. 379 (1963) 27

Topliff v. *Topliff*, 145 U.S. 156 (1892) 27, 28

Warner-Jenkinson Co. v. *Hilton Davis Chemical Co.*, 520 U.S. 17 (1997) ..... *passim*

Union Paper-Bag Machine Co. v. *Murphy*, 97 U.S. 120 (1878) 35

TABLE OF AUTHORITIES — Continued

	Page(s)
Statutes and Regulations:	
28 U.S.C. 1254(1)	1
28 U.S.C. 1295(a)(1)	1
28 U.S.C. 1338(a)	1
35 U.S.C. 101	3
35 U.S.C. 103(a)	3
35 U.S.C. 112	4, 6, 24
35 U.S.C. 112, ¶ 1	4
35 U.S.C. 112, ¶ 5	6
35 U.S.C. 119	6
35 U.S.C. 122(b)	45
35 U.S.C. 154(a)(2)	45
37 C.F.R. 1.52(a)	44

BRIEF FOR THE PETITIONER

OPINIONS BELOW

The opinion of the en banc Federal Circuit (Pet. App. 1a-155a) is reported at 234 F.3d 558. Prior opinions include the original decision of the court of appeals panel affirming the district court's judgment of infringement in favor of petitioner (Pet. App. 190a-207a), reported at 72 F.3d 857; this Court's order granting certiorari, vacating and remanding for further consideration, reported at 520 U.S. 1111; and the decision of the court of appeals panel after remand reinstating the judgment in favor of petitioner (Pet. App. 156a-189a), reported at 172 F.3d 1361.

JURISDICTION

The district court had jurisdiction under 28 U.S.C. 1338(a). The jurisdiction of the court of appeals rested on 28 U.S.C. 1295(a)(1). The decision of the en banc court of appeals was rendered on November 29, 2000. The Chief Justice extended the time for filing a petition for a writ of certiorari to and including April 9, 2001, and the petition was filed on that date and granted on June 18, 2001. This Court has jurisdiction under 28 U.S.C. 1254(1).

STATUTORY PROVISIONS INVOLVED

Pertinent provisions of the Patent Code (35 U.S.C. 101-103, 111-112, 271(a)) are set forth in the Appendix, *infra*.

STATEMENT OF THE CASE

Under the doctrine of equivalents, which this Court acknowledged before the Civil War and reaffirmed as recently as 1997, "a product or process that does not literally infringe upon the express terms of a patent claim may nonetheless be found to infringe if there is 'equivalence' between the elements of the accused product or process and the claimed elements of the patented invention." *Warner-Jenkinson Co.* v. *Hilton Davis*

Chem. Co., 520 U.S. 17, 21 (1997). Without the protection of the doctrine of equivalents, patent-holders would be at the mercy of copyists who could appropriate to their use the essence of an invention by simply introducing a minor and insubstantial variation from the literal terms of just one of the elements described in the patent.

In *Warner-Jenkinson*, the Court specifically rejected the contention that the doctrine of equivalents should be discarded with respect to any patent claim amended during prosecution of the patent. Rather, the Court concluded, estoppel should be reserved for amendments made "to address a specific concern * * * that arguably would have rendered the claimed subject matter unpatentable." 520 U.S. at 30-31. For all practical purposes, the Federal Circuit's decision in this case undoes this Court's work and flouts its reasoning.

Most patents are issued only after one or more amendments have been made. Sometimes those amendments redefine the subject matter of the invention, and sometimes they are intended to meet formal or stylistic requirements for proper description of an invention; rarely are they submitted for reasons unrelated to *any* requirement for obtaining issuance of a patent. If endorsed by this Court, the new principles announced by the Federal Circuit will effectively strip most existing patents of the vital protection provided by the doctrine of equivalents and may be expected in the future to alter radically the practices followed in applying for patents.

A. The Patent Application Process

We begin with a brief review of the structure of the Patent Code and the patent application process, which serves as important background for the consideration of the issues presented by the case. Two chapters of the Patent Code set out what may be patented and how a patent may be obtained. Chapter 10 (35 U.S.C. 100-104) deals with "Patentability of

Inventions" and limits the permissible subject matter for a patent. (It should be noted that the term "Patentability" as used in the Code and in prior decisions of this Court (see p. 26, *infra*), has a far narrower meaning than that ascribed to it by the Federal Circuit.) Chapter 11 (35 U.S.C. 111-122) deals with the "Application for Patent" and sets out drafting requirements for a patent application. To the extent the amendments in this case were responding to a rejection by the patent examiner, the grounds therefor arose under Chapter 11.

In explaining "Patentability," the Code first sets out requirements of novelty and utility. Section 101, headed "Inventions Patentable," provides that a patent may be granted for any "process, machine, manufacture, or composition of matter" that is both "new and useful," or for an improvement on an older invention if the improvement is "new and useful" in its own right. 35 U.S.C. 101. Sections 102 and 103 each are headed "Conditions for Patentability"; each addresses the relation of an invention to prior art in the relevant field. Section 102 elaborates on the requirement of novelty, in principal part denying patentability to inventions that were first invented by someone other than the applicant (*i.e.*, were anticipated), or that the applicant disclosed to the public in certain defined ways (*e.g.*, through sale or permissive public use) more than one year before the patent application was filed. *Id.* § 102. Section 103 rejects patentability if the "subject matter sought to be patented," even if not precisely anticipated or disclosed within the terms of Section 102, nonetheless differs from the "prior art" only in ways that "would have been obvious at the time the invention was made to a person having ordinary skill in the art to which said subject matter pertains." 35 U.S.C. 103(a).

Section 112 sets out the formal requirements for drafting the specification, which is the principal part of a patent application. Among other things, Section 112 imposes

standards of clarity and enablement on the specification, requiring that the invention be described "in such full, clear, concise, and exact terms as to enable any person skilled in the art to which it pertains * * * to make and use" it, while "set[ting] forth the best mode contemplated by the inventor for carrying out his invention." 35 U.S.C. 112, ¶ 1.

An inventor wishing to obtain a patent must file an application with the United States Patent and Trademark Office ("PTO") describing his invention. The application is assigned to an examiner, who reviews it to ascertain whether what is defined in the claims is in fact patentable and whether its claims are described in the form required by the Patent Act.

If there are doubts about the merits or form of the application, as there often are, the application may be rejected on specified grounds, or a process of negotiation between the applicant and the examiner may occur. In either case, what generally ensues are one or more amendments to the application, leading eventually, if the applicant is successful, to issuance of a patent entitling its holder to control use of the invention during its 20-year term.

A patent-holder who believes that an unlicensed person is practicing the invention may bring an infringement action for injunctive relief and damages. To show literal infringement, the plaintiff must establish that the accused product replicates every element set forth in one or more claims of the patent. In addition, however, in order to protect against copyists misappropriating the essence of an invention by copying all but one or two elements and making only minor or insubstantial changes in those, the patent-holder may establish infringement under the doctrine of equivalents.

The specification and the claims contained in the language of the patent thus serve as the primary source for definition of the invention. But the public and the courts are also guided in

that interpretive process by the history of the prosecution of the patent. As traditionally applied, the doctrine of prosecution history estoppel prevents a patentee from recapturing equivalents that were clearly surrendered to obtain the patent.

B. The Prosecution of the Rodless Cylinder Patents

The present case asserted infringement by respondent SMC of U.S. Patent Nos. 4,354,125 (Stoll) and 3,779,401 (Carroll), both owned by petitioner Festo Corporation. Pet. App. 32a. Festo's claims were successful in the trial court, which awarded an injunction and millions of dollars in damages, and were upheld in two Federal Circuit panel decisions before being rejected in full by the en banc Federal Circuit.

The magnetically coupled rodless cylinder inventions of the two patents at issue are each the result of years of development by their inventors, Dr. Kurt Stoll and Mr. George Carroll (CAFC Jt. App. A574-578, A1378-1384). Commercial embodiments of the inventions resulted in applications as diverse as sewing equipment to assist people with disabilities (Jt. App. I-147 to 148) to attractions at Disney World (Jt. App. I-93).

In the litigation below, SMC was held to have infringed the two Festo patents on the basis of the doctrine of equivalents. Pet. App. 32a. SMC's accused product differed from the patented Festo product only insofar as (1) it embodied insubstantial changes in the arrangement of sealing and guide rings positioned on the piston within the cylinder tube and (2) the outer sleeve of the cylinder was composed of a different metal. Pet. App. 38a-39a.

1. Prosecution History of the Stoll Patent

The Stoll patent describes and claims a significantly improved magnetically coupled rodless cylinder. Jt. App. II-1 to 6. Magnetic rodless cylinders are used in a wide range of

industrial applications to transport articles from one point to another. The magnetically coupled cylinders include three basic components: a piston assembly, a cylinder tube, and a follower assembly. Pet. App. 33a. The piston inside the tube is moved by fluid under pressure introduced at either end of the tube. Because the piston and the follower outside the tube are magnetically linked, there is no need for a mechanical linkage, and the follower, and an article attached to it, moves in the same direction outside the tube. *Ibid.*

Dr. Kurt Stoll's original patent application was an English-language translation of a German patent application. Pet. App. 39a. That is not uncommon: many applications claim priority from applications originally filed in other countries, and are translated from the native language of the foreign application into English. 35 U.S.C. 119. Other countries, however, have very different standards for the form of patent claims. Thus, it frequently happens that a literal translation of the claims from a foreign application will fail to satisfy the requirements of 35 U.S.C. 112. Under such circumstances, it may be necessary to delete the unclear literal translation of a claim and submit a new claim for examination by the patent examiner that conforms to U.S. patent practice; amendments made for such reasons rarely reflect any intention to surrender any protection.

The Patent Office rejected the initial Stoll application under 35 U.S.C. 112. Jt. App. II-30 to 32. The patent examiner indicated that the "exact method of operation [was] unclear," see 35 U.S.C. 112, ¶¶ 1-2, and asked, "Is [the] device a true motor or magnetic clutch?" Jt. App. II-31. The examiner also rejected claims 4-12 because they were "improperly multipl[y] dependent" (*ibid.*), that is, multiple dependent claims depended on other multiple dependent claims. That form of claiming is acceptable in Europe, see Jt. App. I-122, but is forbidden by 35 U.S.C. 112, ¶ 5. The examiner did not assert that any prior art

anticipated the Stoll invention or rendered it obvious. Pet. App. 146a; Jt. App. I-121 to 123.

In response, Stoll submitted a single new independent claim in order to clarify the nature of the device. Pet. App. 40a-41a, 185a. Original Claim 1 had claimed a "sealing means at each end [of the piston] for [w]iping engagement with an internal surface of the tubular part and so as to form a seal for the pressure medium." Jt. App. II-24. New Claim 1 incorporated the limitation to two sealing rings that had originally appeared in dependent Claim 4. New Claim 1 also incorporated a limitation from prior dependent Claim 8 requiring that the outer sleeve of the device be made of a magnetizable material. Pet. App. 185a. Stoll also amended the remaining dependent claims to bring them into proper U.S. format.

Along with his amendment, Dr. Stoll submitted two earlier German patents belonging to Festo. Pet. App. 40a. He explained that these patents did not anticipate his invention because neither patent disclosed "the use of structure preventing the interference of impurities located inside the tube and on the outside of the tube while the arrangement is moved along the tube." Jt. App. II-39 to 40; Pet. App. 185a-186a. Stoll's original Claim 1 claimed this distinguishing structure as the "sealing means" on the piston and the "means at each end" of the follower assembly "for wiping engagement with an external surface of the tubular part." Jt. App. II-24. Therefore, original Claim 1 and the newly submitted independent claim were both distinguishable from these German references in the same fashion. Thus, the amendment did not indicate any surrender of subject matter.

In response to the amendment, the examiner proposed to allow the application, provided references to "linear motors" in the specifications were replaced with more appropriate terminology. Jt. App. II-59. Stoll submitted a further

amendment to comply with this demand (Jt. App. II-62), and the patent issued (Jt. App. II-64).

2. Prosecution History of the Carroll Patent

The relevant prosecution history of the Carroll patent occurred when Festo requested a reexamination in light of its own German Patent No. 1,982,379, which had not been considered during initial examination. The German patent discloses a rodless cylinder having several features of the device described in the Carroll patent, including sealing rings. Pet. App. 173a.

During reexamination, the issued claims were cancelled and Festo submitted a new claim including additional elements. Jt. App. II-180 to 186. Festo argued during reexamination that the claimed features of the plurality of spaced magnets and the end members and cushions distinguished the Carroll invention from that described in the German patent. See *ibid.*; Pet. App. 173a. Festo's new claim also added the limitation of a pair of sealing rings at opposite ends of the piston assembly, but never identified the sealing rings as a point of distinction from the German patent. Indeed, the pair of sealing rings did not distinguish over the German patent, which also disclosed a pair of sealing rings on the piston. Jt. App. II-159; II-173, ref. Numeral 1b and 1c. The examiner allowed the new claim and, like Festo, did not identify the sealing rings as a basis for distinguishing the German patent. Pet. App. 173a; Jt. App. II-188 to 189.

C. Prior Proceedings

1. District Court

The magnetically coupled rodless cylinders covered by the Stoll and Carroll patents were unique, door-opener products that Festo used to interest customers in its entire product line. Jt. App. I-91. After Festo enjoyed seven years of strong sales,

respondent SMC entered the market with a rodless pneumatic cylinder that was identical to the Festo device except that it used one rather than two sealing rings and constructed the cylinder sleeve of a different metal. Jt. App. I-92.

Festo sued SMC in the District of Massachusetts for infringing the Stoll and Carroll patents. The district court granted Festo summary judgment with respect to infringement of the Carroll patent, concluding that SMC's rodless cylinders having two sealing rings literally infringed the Carroll patent and that the SMC devices having a single two-way sealing ring infringed the Carroll patent under the doctrine of equivalents. A jury then concluded that the accused SMC devices infringed the Stoll patent under the doctrine of equivalents. Pet. App. 32a.

2. Initial Appeal and Decision on Remand

A panel of the Federal Circuit affirmed (Pet. App. 190a-207a), but this Court granted certiorari, vacated the judgment and remanded the case for further consideration in light of *Warner-Jenkinson*, in which the Court unanimously reaffirmed the vitality of the doctrine of equivalents.

On remand, the panel rejected SMC's arguments that an estoppel should arise regardless of the reasons for an amendment. It noted that *Warner-Jenkinson* specifically declined to adopt a "more rigid rule invoking estoppel regardless of the reason for the change." Pet. App. 172a (quoting 520 U.S. at 32). The panel cited the statement in *Warner-Jenkinson* that, where an amendment was "not related to avoiding the prior art, the change may introduce a new element, but it does not necessarily preclude infringement by equivalents of that element." Pet. App. 172a (quoting 520 U.S. at 33).

The panel held, with respect to the Carroll patent, that because the amendment was made voluntarily and not in response to any objection by the patent examiner, prosecution history estoppel did not limit application of the doctrine of equivalents. Pet. App. 174a-175a. With respect to the Stoll patent, the panel held that one amendment was likewise voluntary, not made to avoid the prior art, and thus prosecution history estoppel did not apply. Pet. App. 188a. Because the other amendment in this patent presented an "unresolved issue," however, the Federal Circuit panel remanded to the district court to determine whether the *Warner-Jenkinson* presumption should apply and if so, whether it could be rebutted. *Ibid.*

3. The En Banc Decision

A sharply divided en banc court of appeals, by an 8-4 vote and with seven separate opinions, reversed the finding of infringement as to both patents. Pet. App. 1a-156a. First, the majority held that an amendment made to satisfy *any* statutory requirement for patentability, even if unrelated to prior art, will trigger prosecution history estoppel. Pet. App. 3a, 8a-11a. It stated (*id.* at 10a-11a):

> In view of the functions of prosecution history estoppel — preserving the notice function of the claims and preventing patent holders from recapturing under the doctrine of equivalents subject matter that was surrendered before the Patent Office — we see no reason why prosecution history estoppel should not also arise from amendments made for other reasons related to patentability * * *.

Second, the court held that a "voluntary" claim amendment not made in response to any objection by the patent examiner could trigger an estoppel. Pet. App. 3a-4a, 11a-13a. In its

view, any amendment, voluntary or not, "signal[s] to the public that subject matter has been surrendered" (*id.* at 12a), and it makes no difference whether the belief in unpatentability derives from the examiner or the applicant.

Third, the en banc court concluded that whenever a claim amendment creates an estoppel, no equivalents of any kind are available as to that element. Pet. App. 4a, 13a-30a. The majority began with a lengthy discussion of this Court's decisions, which, it concluded, did not squarely foreclose its ruling. *Id.* at 13a-19a. It acknowledged that a long line of its own cases had applied a "flexible bar" approach to prosecution history estoppel, in which the range of permissible equivalents rested on "a determination as to the exact 'subject matter the patentee actually surrendered.'" *Id.* at 23a (quoting *Hughes Aircraft Co.* v. *United States*, 140 F.3d 1470, 1476-1477 (Fed. Cir. 1998)). The majority concluded, however, that this approach had proven unworkable because difficulties in applying the doctrine of equivalents impaired predictability of results (Pet. App. 24a-25a); its new complete-bar rule would, it believed, promote desirable certainty in ascertaining the scope of the patent. It also opined that in practice the flexible bar rule enabled applicants to escape the consequences of the disclaimer of subject matter inhering in claim-narrowing amendments (*id.* at 26a). Finally, the court stated that its rule would reduce the occasions for costly litigation, and that the ensuing diminutions in patent protection would benefit the public by allowing its members more freely to "improve on the patented technology and design around it without being inhibited by the threat of a lawsuit * * *." *Id.* at 30a.

On the fourth legal question it addressed, the majority expanded the presumption recognized in *Warner-Jenkinson*. The presumption as delineated in that case applied to "an amendment required during patent prosecution." 520 U.S. at 33. If the prosecution history did not establish the reason for

the required amendment, a "court should presume that the patent applicant had a substantial reason related to patentability for including the limiting element added by amendment." *Ibid.* Unless the patent-holder could establish the reason for the amendment, prosecution history estoppel would apply to the amended element. *Ibid.*

The Federal Circuit majority, however, applied the presumption to all amendments, required or not, while forbidding the patentee to present evidence beyond the prosecution history itself in order to show that an amendment was made for a reason unrelated to patentability. See Pet. App. 47a. Once the presumption was raised — which occurs when the prosecution history does not indicate the reason for the amendment — the presumption would be conclusive, because no evidence outside the prosecution history could be adduced to rebut the presumption. Thus, as the Federal Circuit constructed it, prosecution history estoppel completely bars the application of the doctrine of equivalents to any claim element subject to an amendment for which the prosecution history itself did not indicate a reason. *Ibid.*

Having set forth these principles, the majority quickly dispatched both the Carroll and Stoll patents to oblivion, finding that the claims had in each instance been narrowed and that the arrangement of sealing rings and composition of the sleeve in SMC's accused product, although not materially different from the product described in Festo's patent, did not literally infringe the patent. Because under its holdings the narrowing amendments completely barred all resort to the doctrine of equivalents, the court reversed Festo's judgment against SMC. Pet. App. 50a-56a.

Judge Plager concurred, though characterizing the majority's new approach as "a second-best solution to an unsatisfactory situation." Pet. App. 56a. He warned, however,

that "[u]nfortunately, this attempt at injecting certainty into the doctrine contains the potential for unintended consequences, consequences that may do nothing but exacerbate the problem." *Id.* at 58a. Judge Lourie also concurred, agreeing with the majority that the existing flexible bar rule was unworkable and contending that the Federal Circuit was not constrained by *Warner-Jenkinson* from reaching the result it did (*id.* at 65a) and that any expectations of the patent bar that may have been unsettled by the decision were not worthy of protection (*id.* at 66a).

The en banc decision provoked several vigorous dissents. Reviewing more than a century of precedent, Judge Michel, concurring and dissenting, joined by Judge Rader, maintained that the majority's complete bar "contradicts Supreme Court precedent and policy." Pet. App. 69a. He also noted the harsh retroactive effect of the majority's new rule (*ibid.*):

> [B]ecause most patents contain claims that were amended during prosecution, the majority's holding effectively strips most patentees of their rights to assert infringement under the doctrine of equivalents, despite the Supreme Court's unanimous adherence to the doctrine in *Warner-Jenkinson*.

Judge Michel also warned of the sweeping consequences of depriving even one claim in each patent of all protection of the doctrine of equivalents (Pet. App. 74a):

> [a]nyone who wants to steal a patentee's technology need only review the prosecution history to identify patentability-related amendments, and then make a trivial modification to that part of its product corresponding to an amended claim limitation.

The net effect was plain: "[M]ost patentees will lose the protection against copying that the Supreme Court unanimously reaffirmed in *Warner-Jenkinson*." *Ibid.* Judge Michel concluded that the ruling "will upset basic assumptions regarding the effective scope of patents, and will unfairly disrupt commercial relations based on these assumptions." Pet. App. 111a.

Judge Rader wrote separately to warn that "[w]ithout a doctrine of equivalents, any claim drafted in current technological terms could be easily circumvented after the advent of an advance in technology." Pet. App. 111a.

Judge Linn, concurring and dissenting, joined by Judge Rader, stated (Pet. App. 113a) that

> [T]he new bright line rule, as simple as it is hoped to be in application, wrongfully sets in place a regime that increases the cost and complexity of patent prosecution to the detriment of individual inventors, start-up companies, and others unable to bear these increased costs. The new regime * * * gives unscrupulous copyists a free ride on the coattails of legitimate inventors; and changes the rules under which prosecution strategies were formulated for thousands of extant patents no longer subject to correction.

Finally, Judge Newman, also concurring and dissenting, demonstrated that the majority opinion departs from *Warner-Jenkinson* in three ways (Pet. App. 132a):

> First, the majority holds that all equivalency is barred as to any claim element that is narrowed or added for reasons relating to patentability; access to the doctrine of equivalents is barred

> whether or not the [Supreme] Court's new rebuttable presumption arises and whether or not it is rebutted. Second, the majority denies consideration to any rebuttal evidence that is not already in the prosecution record, thereby converting the [*Warner-Jenkinson*] rebuttable presumption into an irrebuttable fiat. Third, the majority's inappropriately broad definition of "reasons related to patentability" further limits a patentee's access to equivalency, and exacerbates the conflict with the holdings of *Warner-Jenkinson*. The result is to negate infringement by equivalents, as a matter of law, thereby providing a blueprint for ready imitation of patented products.

This Court subsequently granted the petition for a writ of certiorari.

SUMMARY OF ARGUMENT

The Federal Circuit has deformed the traditional functions of prosecution history estoppel and the doctrine of equivalents. The court expanded estoppel to cover all patents that have been amended for reasons related to "patentability" whether or not the amendments surrendered any subject matter. The court simultaneously ruled that any such amendment precludes the patentee from relying on the doctrine of equivalents. Copyists may now proceed by making insignificant changes in any amended claim element, safe in the knowledge that the patentee cannot win an infringement action. The result is to render virtually valueless almost all existing and future patents.

I.

a. The Federal Circuit's new rules flatly contradict this Court's 1997 *Warner-Jenkinson* decision, which built upon

well over a century of like precedent. Under the historic understanding, prosecution history estoppel limits the doctrine of equivalents only when and to the extent that subject matter has been surrendered in order to render a structure or process patentable. That is the function of all estoppels known to the law — to prevent a party from gaining an advantage by contradicting his own prior representation. That is likewise the rationale this Court has consistently used in applying prosecution history estoppel. Festo's amendments to its patent claims did not surrender any subject matter and should not create any estoppel.

The Federal Circuit's fundamental error was its misunderstanding of the word "patentability," used by this Court in *Warner-Jenkinson* to describe the kinds of amendments that could give rise to an estoppel, and construed below to encompass any requirement of the Patent Code that must be satisfied in order to secure issuance of a patent. That is not, however, what "patentability" means. This is plain from the Patent Code itself: Sections 101-103, which deal with the subject matter covered by the invention, come under the chapter heading "***Patentability*** of Inventions," while Section 112, the primary source of the amendments at issue here, is in the chapter describing the "Application for Patent." The latter, therefore, although requirements for issuance of a patent, simply are not requirements relating to "patentability." This is further confirmed by this Court's cases stating that "patentability" involves the subject matter provisions only. *E.g.*, *Graham* v. *John Deere Co.*, 383 U.S. 1, 12 (1966).

b. *Warner-Jenkinson* created a rebuttable presumption of estoppel when the reason for an amendment is unknown. The Federal Circuit, however, held that the reason must be apparent from the prosecution history and that no extrinsic evidence can be considered. This makes no sense. If the reason is shown by the record, there is no occasion for having a presumption. It is

clear, moreover, that this Court contemplated that the presumption would be rebuttable; its remand would otherwise have been pointless. But the exclusion of other evidence destroys the possibility of rebuttal.

c. *Warner-Jenkinson* also held that even where an estoppel does arise, there may remain some range of subject matter that the patentee can claim under the doctrine of equivalents. The Federal Circuit held that no such range of subject matter can exist. The court below thus substituted a complete bar for the flexible bar this Court upheld. This substitution wrenches the estoppel away from the rationale that justifies it. It is wrong as a matter of law, logic, and policy.

II.

The Federal Circuit's sole reason for legislating new rules in conflict with those heretofore applied in this Court is its belief in the superiority of "rigid" rules as a means of producing certainty regarding the scope of patents. The promise of certainty in a viable patent system, however, is illusory. The drastic negative consequences attached to amendments will drive patent attorneys to (1) appeal all rejections rather than amend and accept an all-encompassing estoppel; (2) file very narrow claims to avoid the need to amend, and rely upon the doctrine of equivalents to capture subject matter not claimed; or (3) abandon the patent system altogether and rely on trade secret law.

None of these alternatives will produce certainty or be compatible with the effective operation of the patent system. If certainty is the trump card, there is no reason to eliminate equivalents only when a patent is amended; the doctrine should be expunged from the law altogether. But that would, as this Court has said, make the patent "a hollow and useless thing." *Graver Tank & Mfg. Co.* v. *Linde Air Prods. Co.*, 339 U.S. 605, 607 (1950).

III.

The Federal Circuit's new rules, by radically reducing the value of patents and liberally allowing imitators to appropriate to themselves the economic value of the patented invention, will greatly discourage investment in innovation. That is contrary to the rationale of the entire patent system as expressed by Congress and discerned by this Court.

At the end of the day, it is important to keep in mind that SMC's accused product is functionally the same as Festo's patented products. It captures the essence of the inventions made by Carroll and Stoll, and it departs from the literal patent patent claims only in insubstantial respects that are not materially different from the patented products. It is utterly senseless to jettison 150 years of precedent in order to protect SMC or others of its ilk.

ARGUMENT

This case is about the intersection between two venerable features of patent law: the doctrine of equivalents and that of prosecution history estoppel. The former precludes copyists from appropriating an invention by replicating it with only a minor or insubstantial variation on some element of the claims described in the patent; the latter precludes inventors who deliberately disclaim subject matter in order to render their claims patentable from later seeking to recapture that subject matter by invoking the doctrine of equivalents.

The decision of the Federal Circuit radically alters the prior understanding of the interplay between the doctrines and dramatically expands the traditional reach of prosecution history estoppel. By retroactively removing essential protections from currently outstanding patents, it imposes unfair and unforeseeable penalties on the holders of those patents, rendering most of them effectively unenforceable

against unscrupulous copyists. And looking to the future, the reduced protections afforded to patents under the new Federal Circuit rules will significantly dilute the incentives for innovation that constitute the raison d'etre of the patent system.

I. THIS COURT SHOULD ADHERE TO ITS TRADITIONAL UNDERSTANDING OF THE REACH OF PROSECUTION HISTORY ESTOPPEL

In *Warner-Jenkinson*, this Court unanimously rejected the very same "rigid rule" that the Federal Circuit adopted here. See 520 U.S. at 32. The petitioner advocated, unsuccessfully, that any amendment to a patent claim, regardless of the reason for it, should give rise to a prosecution history estoppel barring any application of the doctrine of equivalents. That rule, this Court concluded, reached "too far." *Id.* at 30.

Under the analysis in *Warner-Jenkinson* and in the 150 years of precedent on which it built, the judgment of the court of appeals must be reversed. Reaching "too far" to exclude the doctrine of equivalents from an effective role in most patents is no small adjustment to the patent system. To the contrary, it strikes at its very heart. The decision below treats the doctrine as a source of unnecessary work for harried judges and an unwarranted inhibition of those who would closely reproduce a patented invention. In fact, however, the doctrine of equivalents gives vital substance to the patent right by protecting inventors from the inherent limitations of language in describing (and delimiting) their inventions. See *Graver Tank*, 339 U.S. at 607.

Patent claims are inherently and unavoidably imprecise at some level of specificity, because it is impossible in drafting them to anticipate every insubstantial variation on each element of the invention. Infringement is clear enough when "an accused device or composition" falls literally within "the words of the claim." *Graver Tank*, 339 U.S. at 607. But such

"[o]utright and forthright duplication is * * * very rare." *Ibid.* Because the ways of tangibly implementing a described structure or process are many, there is usually no need to copy literally every element of an invention; minor details almost always can be changed without altering its operation or result. For that reason, this Court has recognized that the need to express concrete concepts and processes in the words of patent claims should not "place the inventor at the mercy of verbalism" or "subordinat[e] substance to form." *Ibid.*

If an inventor's commercial rival could lawfully imitate a patented invention so long as the rival did "not copy every literal detail," the patent grant would be "a hollow and useless thing," *Graver Tank*, 339 U.S. at 607, since convenience as well as subterfuge may lead to insubstantial substitutions of one element for another. Accordingly, the federal courts, including this Court, long have engaged in a "wholesome realism" (*id.* at 608) and have recognized that a product that substantially duplicates a claim element may infringe even though it does not literally replicate the element. Justice Story was instructing juries to that effect nearly two hundred years ago (see *Odiorne* v. *Winkley*, 18 F. Cas. 581, 582 (C.C. D. Mass. 1814)), and this Court viewed the doctrine as "a well-settled principle of law" by the middle of the 19th Century. *O'Reilly* v. *Morse*, 15 How. (56 U.S.) 62, 123 (1853).

Although the doctrine of equivalents sometimes may be invoked in infringement litigation against sincere but misguided efforts to design around patents as well as against blatant copying, the protection of the doctrine is absolutely necessary to prevent the "practice [of] fraud on a patent." *Graver Tank*, 339 U.S. at 607. See also *Warner-Jenkinson*, 520 U.S. at 34-36 (refusing to limit application of the doctrine to cases of proven intentional copying). If divergence from the strict terms of one element of a patent claim excuses what otherwise would be infringement, then an "unscrupulous copyist" has a clear path

"to make unimportant and insubstantial changes and substitutions in the patent" while escaping liability. *Graver Tank*, 339 U.S. at 607. That is far too high a price to pay for the mere convenience of "a brighter line" that makes routine claim amendments the basis for effectively withdrawing patent protection, and does so, we submit, in wholly arbitrary fashion. See *Warner-Jenkinson*, 520 U.S. at 32 n.6.

A. Prosecution History Estoppel Limits the Doctrine of Equivalents Only When Subject Matter Has Been Surrendered In Order To Render The Claimed Subject Matter Patentable

Prosecution history estoppel is but one of four significant limitations to the application of the doctrine of equivalents. First and foremost, the doctrine requires the patent holder to prove that the accused device includes only insubstantial changes from the patented invention and is therefore truly equivalent. *Warner-Jenkinson*, 520 U.S. at 27-28, 39-40. Second, under the all-elements rule, the accused device must replicate each and every claim element or its equivalent. *Id.* at 29-30. Third, an asserted equivalent cannot infringe if the presence of that equivalent would bring the accused device within the prior art. *Id.* at 31 (citing *Keystone Driller Co.* v. *Northwest Engineering Corp.*, 294 U.S. 42, 48 (1935)). Fourth, equivalents that have been disclaimed during prosecution before the Patent and Trademark Office may not be recaptured in litigation by asserting equivalents. *Id.* at 30-33.

Festo's infringement action meets all of those requirements. Only the fourth, the scope of prosecution history estoppel, is contested here. It is contested not on the facts — equivalence is established, and Festo did not disclaim relevant subject matter in securing the patents — but on the law: SMC contends that estoppel arises even without any disclaimer of subject matter, and that any narrowing amendment completely bars

invocation of the doctrine of equivalents regardless of its purpose.

Imposing an estoppel without a detectable disclaimer works injustice. Where competitors choose to create substantially similar products to those claimed in a patent, the doctrine of equivalents must be available to "prevent the infringer from stealing the benefit of the invention." *Graver Tank*, 339 U.S. at 608 (quoting Judge Learned Hand in *Royal Typewriter Co.* v. *Remington Rand*, 168 F.2d 691, 692 (2d Cir. 1948)). The Federal Circuit's drastic expansion of prosecution history estoppel would severely curtail the ability of the doctrine of equivalents to perform this crucial function.

The Federal Circuit rule tears the estoppel principle from its roots. Estoppel is an equitable doctrine that prevents a party from obtaining a benefit by contradicting a previous assertion from which he gained advantage. He may not surrender a position or a claim to achieve one purpose and then attempt to reassert that which was abandoned to achieve another purpose. *Davis* v. *Wakelee*, 156 U.S. 680, 689 (1895). Accordingly, it is deemed inequitable to permit a patent holder, once having secured a patent through the surrender of subject matter, to reclaim the same subject matter by asserting the doctrine of equivalents.

In addition, insofar as an estoppel is justified to enforce the public's right to rely on what is disclosed by the record of the prosecution of the patent, that goal has force only to the extent the surrender was such that a competitor would reasonably believe that a disclaimer has taken place. This explains why prosecution history estoppel has heretofore been limited to amendments made in response to objections about novelty or obviousness, see *Warner-Jenkinson*, 520 U.S. at 30-32. In that context a competitor may reasonably rely on the applicant's surrender of subject matter as an acquiescence in the

examiner's judgment that the earlier claim in fact was anticipated by, or obvious in light of, prior art.

The fact that limitations have been added to a claim does not in itself evince a surrender of equivalents for the added elements. See *Goodyear Dental Vulcanite Co.* v. *Davis*, 102 U.S. 222, 223-227 (1880); *Sargent* v. *Hall Safe & Lock Co.*, 114 U.S. 63, 86 (1885) (quoting *Fay* v. *Cordesman*, 109 U.S. 408, 420 (1883) (addition of element in response to rejection leaves open question whether in an accused device that element "is supplied by an equivalent")). Assume that an applicant for a patent mistakenly omits a claim element that links two other elements of a claim. Although the claim would otherwise be allowable in view of the prior art, the patent examiner rejects the application under § 112 because a necessary linking element was omitted. The applicant amends the claim to add the linking element, and the claim is then allowed. Under the new Federal Circuit rule, the claim amendment, though it surrendered nothing, would create prosecution history estoppel preventing reliance upon the doctrine of equivalents. That result is inequitable and unconnected to the rationale for enforcing estoppels. The patentee has not sought an advantage by contradicting his own previous assertion.

As Judge Michel explained in dissent, an estoppel applied under these circumstances "is hardly an 'estoppel' at all." Pet. App. 73a. The Federal Circuit ignores the context of amendments within the prosecution history, giving no consideration to "whether a reasonable competitor would rely on the nature of the rejections and of the amendments and statements between the applicant and the examiner as evidence of a surrender of subject matter." *Ibid.* The Federal Circuit has transformed a rule of equity into a conclusive legal presumption of dramatically wider scope that is wholly unlike traditional estoppels.

That dramatic transformation is illustrated by the case at bar. With respect to the Stoll patent, the claims were rejected only under 35 U.S.C. 112 for lack of clarity and improper format (Jt. App. II-30 to 32); no prior art rejection was ever made by the examiner. In response, Festo cancelled the only independent claim as well as several dependent claims and submitted a new independent claim including the limitations from the cancelled claims. Jt. App. II-36 to 40. Neither of the two limitations here at issue (sealing rings and composition of sleeve) was required during prosecution for patentability over the prior art. This Court has never held such amendments made in response to a § 112 rejection to create any estoppel, much less a complete bar to the doctrine of equivalents (see Point I(B), *infra*).[1]

1. The Federal Circuit's rule is wholly inconsistent with the way this Court has applied prosecution history estoppel.

Under the Federal Circuit's new rule, prosecution history estoppel arises in connection with amendments made for "any reason related to the statutory requirements for a patent." Pet. App. 3a. Therefore, estoppel will automatically arise not only from amendments made to avoid prior art but also from amendments made to overcome rejections based on the formal and linguistic requirements of Section 112. Under this approach, nearly every claim amendment will create estoppel.

---

[1] The en banc majority suggested, in unelaborated *ipse dixit*, that the amendments were motivated by the prior art. See Pet. App. 52a. This was clear error. Neither the district court nor two panels of the court of appeals had found that the amendments were motivated by the prior art, SMC itself had not even asserted it, and there was no evidence from which the conclusion could fairly be drawn. To the contrary, it is in fact clear that none of the prior art required the addition of the elements now at issue. Even were that disputable, the majority's characterization would represent exercise of a fact-finding power it does not possess.

But while amendments that avoid the prior art are meant to surrender previously overbroad subject matter claims, those that merely clarify or otherwise improve the description of the invention do not necessarily surrender anything.

The protestations of the majority below notwithstanding, it is plain that its approach departs dramatically from this Court's prior delineations of the circumstances giving rise to estoppel. As the Court pointed out in *Warner-Jenkinson*, 520 U.S. at 31, its earlier cases had unfailingly "probed the reasoning behind the Patent Office's insistence upon a change in claims" and had imposed an estoppel "only where claims have been amended for a limited set of reasons." *Id.* at 32. After carefully reviewing those cases, the Court concluded that "[w]here the reason for the change was not related to avoiding the prior art, the change may introduce a new element, but it does not necessarily preclude infringement by equivalents of that element." *Id.* at 33. This is precisely the case at bar. None of the elements at issue were amended in view of prior art, and SMC's product has been found to meet all the requirements for infringement under the doctrine of equivalents.

Indeed, the Court repeatedly referred to "prior art" in discussing the types of amendments that create prosecution history estoppel (see 520 U.S. at 30, 31 & n.5 (five references), 33 & n.7), observing that in its decisions "prosecution history estoppel was tied to amendments made to avoid the prior art, or otherwise to address a specific concern — such as obviousness — that arguably would have rendered the claimed subject matter unpatentable." *Id.* at 30-31. Consistently with this description, the Court has never invoked an estoppel based on file history where prior art was not the reason for the amendment. See, *e.g.*, *Exhibit Supply Co.* v. *Ace Patents Corp.*, 315 U.S. 126, 136 (1942); *Keystone Driller Co.* v. *Northwest Engineering Corp.*, 294 U.S. 42, 47 (1935); *Smith* v. *Magic*

City Kennel Club, Inc., 282 U.S. 784 (1931); *Hubbell* v. *United States*, 179 U.S. 77, 83 (1900).

In the course of reiterating this point, the Court stated that if an amendment "had a purpose unrelated to patentability, a court must consider that purpose in order to decide whether an estoppel is precluded." *Warner-Jenkinson*, 520 U.S. at 40-41. The Federal Circuit seized upon the use of the word "patentability" to support its all-embracing approach to the occasions for estoppel. Pet. App. 11a. But the word does not broaden the scope of estoppel to encompass the formal requirements of Section 112. To the contrary, "patentability" has an established and limited meaning. This Court has explained that the Patent Act "sets out the conditions of patentability in three sections" that impose "three explicit conditions: novelty and utility as articulated and defined in § 101 and § 102, and nonobviousness * * * as set out in § 103." *Graham* v. *John Deere Co.*, 383 U.S. 1, 12 (1966).

The structure of the statute makes this unmistakably clear: Sections 101-103 come under the chapter heading "***Patentability*** of Inventions," while Section 112 is in the chapter describing the "Application for Patent." See *Graham*, 383 U.S. at 14 (noting interpretive significance of headings in 1952 Patent Act). And if there remained any room for doubt, this Court removed it when it noted in *Warner-Jenkinson* that prosecution history estoppel was limited to amendments addressing prior art or other concerns "that arguably would have rendered the claimed ***subject matter*** unpatentable." 520 U.S. at 30-31 (emphasis added). See also *id.* at 34 (referring to PTO function to ensure "that the claims allowed cover only subject matter that is properly patentable").

There is no support in any of this Court's precedents for imposing estoppel based on amendments made to impart clarity or to comply with formal requirements governing the manner

of describing the invention rather than to distinguish prior art.[2] This differentiation is justified by the difference in purpose of amendments made for prior art and amendments made for clarity.[3] When responding to an actual or potential prior art rejection, the applicant narrows the scope of the claim to distinguish the invention from what is already known. Having surrendered subject matter in this way, core estoppel principles justify blocking an attempt to recapture it under the doctrine of equivalents.

By contrast, amendments that clarify claim language are not made to surrender territory, but to define the borders of the patent more clearly and comprehensibly, to assist in notifying the public of the scope of the right, and to enable those in the art to reproduce the invention. If estoppel may arise from such amendments, a patent holder must fight to maintain unclear boundaries to his patent rights, a goal that undermines the notice function of claims.

The Federal Circuit offered no sound reason why a claim that defines the invention with sufficient clarity upon filing should be protected by the doctrine of equivalents, while a claim that is amended to impart that same clarity should be unprotected. This Court has long recognized that a patent application "constitute[s] one of the most difficult legal instruments to draw with accuracy," *Sperry* v. *Florida Ex Rel. Florida Bar*, 373 U.S. 379, 383 (1963) (citing *Topliff* v. *Topliff*,

---

[2] The Federal Circuit previously drew the same distinction. See, *e.g.*, *Black & Decker* v. *Hoover Service Center*, 886 F.2d 1285, 1294 n.13 (Fed. Cir. 1989); *Mannesmann Demag Corp.* v. *Engineered Metal Prods. Co.*, 793 F.2d 1279 (Fed. Cir. 1986); *Moeller* v. *Ionetics, Inc.*, 749 F.2d 653 (Fed. Cir. 1986); *Hi-Life Products, Inc.* v. *American Nat'l Water-Mattress Corp.*, 842 F.2d 323 (Fed. Cir. 1988).

[3] The United States explained this point in its brief in *Warner-Jenkinson*, see 1996 WL 172221, at *22-*23 (U.S. Apr. 11, 1996).

145 U.S. 156, 171 (1892)). The Federal Circuit's newfound insistence that applicants describe their inventions flawlessly from the outset places form over substance and overlooks the realities of patent prosecution.[4]

An inventor with intimate knowledge of the invention may firmly believe upon filing an application that the claim defines the invention clearly. However, claims are formed of words subject to various interpretations. A patent examiner having a different perspective may disagree with the inventor and require a change in the claim to ensure it is clear to the public. Prior to the decision below, applicants freely made amendments of this kind to accommodate the examiner's concerns and move the case forward. No one contemplated that routine clarifying amendments might restrict the scope of patent protection to the literal meaning of any arguably narrowing element. See, *e.g.*, *Warner-Jenkinson*, 520 U.S. at 32 n.6; *id.* at 41 (Ginsburg, J., concurring).

The facts of this action illustrate the point. In the case of the Stoll patent, the problem never was that the claimed invention was not a true advance over prior art. Rather, the format of the translation of the German patent did not comply with U.S. requirements, and the wording of the application left the examiner uncertain as to the exact character of the invention. And in the case of the Carroll patent, the circumstances that prompted the request for reexamination had

---

[4] This is especially true for U.S. applications based on a foreign priority application, as was the Stoll patent. Such U.S. applications are typically translations of the corresponding foreign priority applications. The translation process may introduce ambiguities, or questions of clarity may be introduced into a claim. These issues are typically addressed during prosecution by amending the claims to impart definiteness and otherwise conform to the particularities of U.S. law. The Federal Circuit's indiscriminate use of estoppel is extremely unfair to previously prosecuted patents that were based on foreign applications.

nothing whatever to do with the elements as to which SMC's product infringes by equivalents. In addressing these imperfections of draftsmanship and oversights in the formulation of the original applications, there was nothing remotely approaching a disclaimer that the invention covered other types or arrangements of sealing rings than the ones shown, or a differently composed but functionally identical sleeve. This history is far removed from the kind of action that would support an estoppel.

2. The Federal Circuit unjustifiably expanded the presumption recognized in *Warner-Jenkinson*.

In *Warner-Jenkinson*, this Court created a new, rebuttable presumption regarding the applicability of prosecution history estoppel: if an amendment submitted in response to a PTO rejection over prior art narrowed the claims without an explanation of the reason for the narrowing, it would be presumed that the entire amendment was intended to avoid that art or otherwise to render the subject matter patentable. See 520 U.S. at 33-34. If the patentee could not rebut the presumption, the amended claim element would receive no protection from infringement by equivalents.

The decision below dramatically alters the nature and scope of the presumption in two respects, both erroneous: it applies the presumption to all amendments, not just those made in response to a PTO rejection for overbroad subject matter; and it bars consideration of any evidence beyond the face of the PTO record in determining whether the presumption has been rebutted.

a. The circumstances giving rise to the presumption were expressly described in *Warner-Jenkinson* as those in which the amendment has been "***required*** during patent prosecution," and the Court further stated that the presumption was "subject to rebuttal if an appropriate reason for a ***required*** amendment is

established." 520 U.S. at 33 (emphases added). Nevertheless, the Federal Circuit found the presumption applicable even to voluntary amendments. Pet. App. 50a. In so doing, it unlinked the presumption from the rationale for having a presumption.

It makes perfect sense to presume that all of the contents of an amendment required by the Patent Office to ensure that the "claims allowed cover only subject matter that is properly patentable" (520 U.S. at 34) in fact surrender subject matter in order to comply with the requirement. Prosecution history estoppel exists to ensure that the prosecution history does not mislead the public about the scope of a patent. If the file wrapper shows expressly that an amendment was intended to surrender subject matter, the public can rely on that indication. The situation is more uncertain when an applicant responds to a rejection for prior art by submitting an amendment without providing further explanation for the submission; nevertheless, the applicant's silence in that context makes it fair to presume that the amendment responded to the rejection, unless the patentee can prove otherwise. An applicant responding to an objection based on prior art has warning that its response may be deemed to waive subject matter unless it provides a contrary explanation. A rational observer might well assume that every part of a response to a prior art rejection in fact addresses prior art. It was therefore appropriate to place the burden on the patentee to establish the falsity of that assumption. *Id.* at 33.

But because amendments are made for many reasons other than to narrow the scope of the claimed invention, silence about the purpose of amendments made in less suggestive contexts lacks the same potential to mislead. Indeed, to the extent an amendment is not intended to limit the subject matter claimed, it is less likely that the applicant would have perceived any need to explain its purpose to the PTO. In sum, where an amendment is made voluntarily and without discussion of the reasons for it, the public has no basis to assume that the

amendment was intended to surrender subject matter. A presumption that it was so intended would be unjustified.

b. The Federal Circuit did more than broaden the presumption to cover *all* unexplained amendments, regardless of context. It also held that "a patent holder seeking to establish the reason for an amendment must base his arguments solely upon the public record of the patent's prosecution, i.e., the patent's prosecution history" (Pet. App. 47a). This makes no sense: if the reason for the amendment is discernible from the PTO record, there is no need to indulge presumptions about what that reason might be. It is only where, **as in *Warner-Jenkinson***, the record is silent as to the reason that a presumption does useful service. Thus, when this Court stated that "[t]he presumption we have described" is "subject to rebuttal if an appropriate reason for a required amendment is established" (520 U.S. at 33), it could only have intended that the rebuttal be made from material not appearing on the face of the PTO record. Under the Federal Circuit's interpretation, by contrast, the remand in *Warner-Jenkinson* for possible rebuttal of the presumption would have been pointless.

The Federal Circuit's irrebuttable presumption applies without inquiry into the facts to determine whether it is fair and accurate to say that the patent applicant voluntarily surrendered, abandoned, or disclaimed coverage of equivalents by his actions in the PTO. The net effect, as Judge Newman observed, is that "access to the doctrine of equivalents is barred whether or not the [*Warner-Jenkinson*] rebuttable presumption arises and whether or not it is rebutted." Pet. App. 132a.

If we are correct in the foregoing arguments, it follows that the judgment of the en banc Federal Circuit must be reversed and the judgment of the district court reinstated. None of the amendments here at issue, whether voluntary or made in response to a PTO rejection, were designed to overcome prior

art or otherwise rectify a failure to disclose patentable subject matter. They accordingly do not fall within the category of amendments that give rise to any form of prosecution history estoppel.

B. Prosecution History Estoppel Does Not Completely Bar Every Possible Range of Equivalents for an Amended Claim Element

When an amendment ***does*** surrender subject matter, and thus the prosecution history creates an estoppel, a question arises as to the scope of the estoppel: Does it completely bar any invocation of the doctrine of equivalents as to the narrowed element, or is the bar confined to those aspects of the narrowing amendment that were intended to distinguish prior art or otherwise disclaim subject matter that the applicant feared was not patentable?

An example will illustrate the difference between a flexible and a complete bar. Imagine a claim that describes two members as being connected together, when the prior art discloses the members connected together by a nail. To avoid the prior art, the claim is amended to state that the members are glued together. Suppose further that there are two accused devices, one using paste to secure the connection and the other using a screw. Under a complete bar, the doctrine of equivalents would be unavailable as to both accused products. Under a "flexible bar" regime, equivalence could not be asserted as to the screw, it being closely related to the prior art that the amendment was designed to avoid. But because paste is far more like glue than a screw or nail is, the patent could be enforced against the paste product if the patentee is able to prove at trial that glue and paste are equivalents. In other words, while the patent could not, as a consequence of the amendment, cover nails, screws, tacks, and the like, the applicant is not taken to have surrendered all equivalents to his

revised claim and would remain able to prevent a competitor from making the minor substitution to avoid the claim.

The majority below acknowledged that the Federal Circuit had generally applied the "flexible rule" in the past (Pet. App. 19a-24a), but it nevertheless concluded that the approach should be abandoned as creating uncertainties and difficulties in judicial administration that rendered it "unworkable." Pet. App. 24a-25a. The court offered no support for that conclusion but nonetheless ruled that any amendment related to patentability surrenders all equivalents to the amended element.

While the majority asserted that its reading was not flatly foreclosed by this Court's precedents, it could do little to negate the clear spirit of those decisions, which are at bottom irreconcilable with a "complete bar" approach. In case after case, this Court has proceeded on the view that some range of equivalents may exist after an amendment, and that the scope of any estoppel depends on the scope of the surrender indicated by the prosecution history.

We refer the Court to the excellent and thorough analysis of its precedents set forth by Judge Michel in his dissent (Pet. App. 69a-113a), which there is neither need nor space to replicate here. We therefore confine ourselves to touching on a few highlights that demonstrate the magnitude of the inconsistency between the Federal Circuit's rule and this Court's decisions:

- In *Hurlbut* v. *Schillinger*, 130 U.S. 456 (1889), a patentee who had disclaimed a portion of his invention, and who had been found in prior litigation to be precluded from asserting his claims against one accused device in light of that disclaimer, nonetheless remained entitled to a judgment of infringement by a different device constructed in a manner that less closely resembled

what had been disclaimed and was more closely equivalent to his claimed invention.

- In *Fay* v. *Cordesman*, 109 U.S. 408 (1883), a patentee, despite having amended his claims through the reissuance process, was still able to assert his claims against other devices that were more closely equivalent to his invention.

- In *Goodyear Dental Vulcanite Co.* v. *Davis*, 102 U.S. 222, 223-227 (1880), the Court found that an amended claim did not cover a product formulated in a manner that would have been covered before amendment but was within the area surrendered by the amendment. It nevertheless clearly stated that the patentee could assert infringement of the amended claims by products that were truly equivalent to those recited in the patent. *Id.* at 227.

- In *Shepard* v. *Carrigan*, 116 U.S. 593, 598 (1886), the patentee had "explicitly abandoned" claims to an unplaited skirt protector, but this Court nevertheless contemplated that other skirt protectors could be found to constitute "an equivalent device or instrumentality" of the invention claimed in the reissued patent.

- And, of course, there is *Warner-Jenkinson* itself. The Court carefully parsed the amendment to the claim for a dye purification process that had added limitations requiring the process to be conducted at a pH between 6.0 and 9.0. No dispute existed that the 9.0 pH limitation was necessary to avoid a similar prior art process that operated at a pH above 9.0. 520 U.S. at 32. The Court remanded for determination of whether equivalents should be barred for the 6.0 pH limitation, however, which

> "by its mere inclusion, became a material *element* of the claim." *Ibid.* (emphasis in original). A complete bar approach would have ended the inquiry on the spot, leaving nothing for the lower courts to determine on remand. According to the Court, however, "[t]hat did not necessarily preclude the application of the doctrine of equivalents as to that element." *Ibid.*

In each of these cases, this Court examined the prosecution record to determine what, if any, subject matter was abandoned.

The Court's traditional approach is in total harmony with the essence of the doctrine of equivalents. As the Court long ago declared, and reiterated in *Warner-Jenkinson*, "the substantial equivalent of a thing, in the sense of the patent law, is the same as the thing itself." 520 U.S. at 35 (quoting *Union Paper-Bag Machine Co.* v. *Murphy*, 97 U.S. 120, 125 (1878)). Indeed, "the essential predicate of the doctrine of equivalents is the notion of identity between a patented invention and its equivalent." *Ibid.* Because the allowance of a patent claim encompasses the equivalents to the claim, the Court has observed that patentees "are entitled in all cases to invoke to some extent the doctrine of equivalents * * *." *Seymour* v. *Osborne*, 78 U.S. (11 Wall.) 516, 556 (1870). Properly viewed, therefore, statements made and actions taken during the prosecution history define and limit the scope of the equivalents allowed rather than automatically preclude patent protection for any equivalents whatsoever.

When subject matter is disclaimed to obtain the patent, it is fair to conclude that the surrendered subject matter is not equivalent to the retained matter. And that is largely the effect of prosecution history estoppel as this Court has understood it: an amendment submitted to avoid prior art necessarily excludes at least that prior art from the scope of equivalents of the

subject matter retained in the claim. See *Warner-Jenkinson*, 520 U.S. at 32. The amendment helps to define the scope of the claim. But, as the example with the nails and the adhesive shows, it is not correct as an empirical matter that an amendment that surrenders some things was *ipso facto* intended to surrender, or conveys to a reasonable observer a relinquishment of, all possible equivalents. In fact, all that may fairly be said to have been deliberately and demonstrably surrendered is the portion of the pre-amendment claims that casts doubt upon the inventiveness of the product or process involved.

The Federal Circuit's new rule is also unnecessary to prevent recapture of what has been surrendered. The very act of narrowing the claims, by its inherent nature, correspondingly narrows the range of equivalents that may be claimed. That inherent restriction of equivalents, proportioned to the contraction of claims made to ensure the patentability of the subject matter, is all that is needed or justified by the principles underlying prosecution history estoppel.

The Federal Circuit was concerned about having the patent system operate with sufficient certainty to avoid over-deterring innovation that might approach the terms of patent claims without literally infringing them.[5] But this Court specifically addressed the concern "that the doctrine of equivalents, if applied too broadly, conflicts with the definitional and public-notice functions of the statutory claiming requirement." *Warner-Jenkinson*, 520 U.S. at 29. The Court chose to balance those interests by means of the rebuttable presumption discussed above (at pp. 29-32) and by requiring that every

[5] This concern severely distorts the whole purpose of the patent system, which is not to allow close copying of patented inventions, but to provide incentive for innovation by securing to inventors meaningful protection of the essence of their invention. See pp. 42-44, *infra*.

element of the claim be replicated, literally or by an equivalent, before infringement may be found. The latter principle prevents a patentee from including an element in the claim and then claiming infringement by devices that do not include that element or its equivalent. The Court "was confident" that, so long as the doctrine of equivalents is "applied to individual elements of the claim, not to the invention as a whole[,] * * * the doctrine will not vitiate the central functions of the patent claims themselves." *Id.* at 29-30.

In sum, the Federal Circuit's "complete bar" rule is profoundly wrong in law, in logic, and in policy. It promotes imitation over innovation. That could not be better illustrated than by the facts of this case. Even though it has been established that SMC's device duplicates each element of the claims of the Stoll and Carroll patents — in most cases exactly but in two aspects through insubstantial differences — and even though the amendments served limited purposes and could not be said to have disclaimed sealing rings functioning like those in the Stoll and Carroll patents or a sleeve functioning like that in the Stoll patent, the Federal Circuit's new *per se* rule of estoppel has effectively obliterated Festo's patents, leaving it helpless before copyists. This is done, moreover, for no better reason than that 20 years ago the claims were amended for purposes distinct from the current claims of equivalence. The effect upon Festo will be devastating; the effects upon the patent system no less so.

The implementation of the flexible bar is certainly more difficult than that of the rigid bar and creates a question as to what was surrendered. But any difficulties of application are no greater than those attending application of the doctrine of equivalents to unamended claims. Moreover, as Judge Linn observed, "the mere fact that this court's new rule is a brighter line for determining whether a patentee is estopped from asserting infringement by equivalents, cannot be justification for

adopting a rule that so substantially changes the rules of the game and discounts the intrinsic worth in treating more fairly the individual inventor whose patent right is under administrative scrutiny and is subject to the inherent limitations of language." Pet. App. 128a. Cf. *Warner-Jenkinson*, 520 U.S. at 32, n.6 (mere creation of a "brighter line" does not justify a new estoppel rule).

II. THE FEDERAL CIRCUIT'S NEW RULES ACCOMPLISH NOTHING USEFUL BUT ARE BOUND TO COMPLICATE PATENT PROSECUTION AND LITIGATION

The new rules promulgated by the Federal Circuit are untenable: not only do they fail to serve the purpose for which they are purportedly designed, but they will introduce fresh difficulties into patent prosecution and litigation.

The entire rationale advanced by the court for its drastic rewriting of established patent law was that the existing rules are so imprecise as to be "unworkable." This overlooked the facts that courts had made those rules work for over a century and that the courts will still have to wrestle with the doctrine of equivalents with respect to patents obtained without amendment to the application — which in the future, by virtue of the Federal Circuit's decision in this case, would be most patents.

The Federal Circuit proceeded, nevertheless, to legislate a new bright-line test that it said would greatly reduce uncertainty. Where there has been an amendment to a patent application, judges are to be relieved of the task of ascertaining the reason for or scope of the amendment, or deciding whether an accused device or process is the equivalent of a patented one. Not only is the price to be paid for this supposed gain in certainty unacceptable, the promise of certainty is itself chimerical. The court left out of account the wholly predictable reactions of the patent bar to the new situation.

Prior to the Federal Circuit's decision in this case, the scope of an allowable claim was settled by discussions and negotiations between the claimant's lawyer and the patent examiner. Amendments were freely made to satisfy the examiner's objections. That relatively nonadversarial approach is no longer viable: to amend is to lose the value of the patent to copyists. To avoid this, a patent lawyer filing a claim with the PTO will now have three courses of action, none of them satisfactory:

First, when the examiner rejects an initial filing, the patent attorney may reasonably conclude that there is little choice left but to refuse to amend and instead appeal the rejection to the Board of Patent and Interference Appeals and, if necessary, to a district court and then to the Federal Circuit. Judge Lourie, concurring, advises the patent applicant now to "stand his ground and appeal." Pet. App. 67a. If attorneys generally choose this route, the number of appeals will increase dramatically. The appeals system will be clogged, placing an extra burden on the PTO. The appeals process may then take years more than had been the case, and even successful appeals will often prove to be Pyrrhic victories. The time elapsing during the appeal process is subtracted from the term of the patent, and during that time there is no protection. Particularly in areas of rapidly changing science and technology, these lost early years would otherwise be the most valuable for the patentee. If the appeal fails, as many of them certainly will, the attorney will have no alternative but to amend, thus forfeiting the doctrine of equivalents. Time and money will have been spent to accomplish nothing.

An alternative, and perhaps preferable, tactic would be to formulate claims very narrowly in the first instance in an attempt to avoid the need for any amendments. The patentee will then resort to the doctrine of equivalents in litigation in order to preserve the value of his patent. Judge Plager, concurring,

predicted this reaction. Pet. App. 59a. This may be the safer course, but the artificial and perhaps unnecessary narrowing of the patent claim will often needlessly strip the invention of the full patent protection to which it is legally entitled. More, the purported benefits of the Federal Circuit's bright-line test will never materialize. Litigation over the application of the doctrine of equivalents will proceed as before. But by artificially narrowing the patent claims and eliminating the give-and-take between the claimant and the examiner, the proper scope of the patent will be distorted with no compensating benefit.

The third choice for an inventor is to refrain from filing for a patent at all, thereby avoiding public disclosure of the invention, and to seek instead to protect the invention as a trade secret. "To prohibit no other [than literal infringement] would place the inventor at the mercy of verbalism and would be subordinating substance to form. It would deprive him of the benefit of his invention and would foster concealment rather than disclosure of inventions, which is one of the primary purposes of the patent system." *Graver Tank*, 339 U.S. at 607. Unsatisfactory as trade secret law is — secrets are often discoverable, and there is no protection against subsequent independent invention — a secret is preferable to patent disclosure without protection. Reliance upon trade secret law, and abandonment of the patent system, will harm both inventors and the public.

These are the choices forced upon inventors by the Federal Circuit's new rules. In devising those rules, the Federal Circuit overlooked the ineradicable uncertainty in patent claims. It is a serious mistake to think of a claim description as possessing the clarity of a mathematical formula. A patent claim, as Judge Linn observed, is "a linguistic description of a mental concept. Due to the inherent limitations of language, the fit between the description and the concept is almost always inexact. In addition * * * the language itself may not be adequately

developed at the early stages when patent applications are typically filed, particularly in rapidly evolving research fields * * *. Consequently, claims are commonly amended during prosecution to more particularly point out and distinctly claim that which is regarded to be the invention." Pet. App. 116a-117a (citation omitted). The paramount need to avoid amendment will convert the patent application process into a pettifogging exercise in draftsmanship reminiscent of medieval pleading rules.

In addition to its other failings, the Federal Circuit's rationale for expanding prosecution history estoppel far beyond its equitable function and for barring the doctrine of equivalents entirely whenever an estoppel arises for any reason is completely illogical. Why restrict the rules in this way? Even greater certainty could be achieved by simply eliminating the doctrine of equivalents altogether. There is no logical reason to destroy the doctrine only when an amendment (even one that does not surrender any subject matter in dispute) has been made but to leave the doctrine in full force when no amendment is made. The court has gone at least four-fifths of the way to erasing the doctrine of equivalents, and the presence or absence of an amendment that does not disclaim subject matter bears no relation to the purpose the Federal Circuit announced. If certainty is so compelling that it overrides all other considerations, the court should go all the way and entirely abolish the ability to enforce patents.

Short of abolishing the patent system altogether — which is what forced recourse to trade secret law accomplishes and the decimation of the doctrine of equivalents comes close to achieving — no judicial rewriting of doctrine can eliminate uncertainty in patent litigation. The Federal Circuit has chosen measures that not only conflict with this Court's precedent but radically reduce the value of patents without promoting certainty.

III. THE FEDERAL CIRCUIT'S RULES WOULD SERIOUSLY DAMAGE THE PATENT SYSTEM AND ENACT HARMFUL PUBLIC POLICY

It is no exaggeration to say that the Federal Circuit has dealt the U.S. patent system a crippling blow. The practical effect of the new rules is that would-be competitors need only find an amended claim element in a patent, make an insubstantial change, and thereby deny the patentee protection under either the literal claim or the doctrine of equivalents.

Warner-Jenkinson affirmed a rule striking a very different balance between effective patent protection and the freedom of competitors to design around the patented device or process. A patentee may claim protection from any competing product or process that is equivalent to his own invention unless he has clearly disclaimed the area of science or technology in which the accused "innovation" operates. The court below has swept all that away except for a small minority of patents.

The results are predictable and inevitable. Much of the "stimulat[ion of] investment in improvements and design-arounds" that the majority foresees (Pet. App. 30a) will actually be investment in copying patented products and processes with insignificant changes. Even more certain is that investment in patentable inventions will sharply and very substantially decline. This is due to the familiar problem of the free ride. Investors in patentable inventions will realize that they alone bear the cost of innovation but that most of the benefits will be appropriated by copyists. Under these conditions, which are the direct result of the new rules, investment in innovation will be very greatly reduced.

As Judge Newman put it in dissent (Pet. App. 153a), "the assumption that placing new technology in the public domain is always the optimum path to industrial growth is not supported by experience. Empirical studies have added rigor to the

common sense knowledge that reduced profit opportunity affects the supply of capital to launch a new technology, and often the creation of the technology itself." For this reason, the Federal Circuit's rules would prove especially damaging to small firms, start-ups, and individual innovators. Dominant firms such as SMC's amici may find the new rules congenial because they prevent the successful invasion of their markets by smaller firms with patented innovations, but this is hardly a benefit to the public as a whole.[6]

If not overturned, moreover, the Federal Circuit's decision will do a gross injustice to all those who hold patents issued earlier. There are approximately 1,200,000 outstanding patents, the large majority of them amended during the prosecution process under rules in effect until this case. Those patents were amended freely to satisfy the examiners and without preserving a record of the reasons for the amendments. All of those patents are now vulnerable to copyists under the Federal Circuit's new, retroactive rule. Deprived of the doctrine of equivalents, the owners of such patents will find them either radically diminished in value or effectively destroyed. It is safe to say that this havoc will be wreaked upon hundreds of thousands of existing patents

---

[6] In addition, as Judge Rader pointed out in his dissent (Pet. App. 111a), the rules adopted by the majority are especially problematic in areas of rapidly evolving technology, which he characterized as one of the primary justifications for the doctrine of equivalents. Claims in patent applications are of necessity described in terms of existing technology. As that technology evolves, however, it becomes increasingly easy to substitute newer components that do not substantially change the product from that described in the patent but that likewise do not literally infringe its terms. Under the decision below, "[a]ll patent protection for amended claims is lost when it comes to after-arising technology," (*id.* at 112a), a result that, as Judge Rader observes, cannot be justified on the theory that it was surrendered by the applicant. Judge Rader's observations are especially apt in the rapidly developing fields of biotechnology and information technology.

granted under the then-existing rules. That result cannot be justified under any doctrine called equitable.

This is precisely the concern that prompted Justice Ginsburg's concurrence, joined by Justice Kennedy, in *Warner-Jenkinson*. Justice Ginsburg warned that "applied woodenly" the presumption that an amendment without a known reason creates prosecution history estoppel might "unfairly discount the expectations of a patentee who had no notice at the time of patent prosecution that such a presumption would apply * * * . Years later, the patentee may find it difficult to establish an evidentiary basis that would overcome the new presumption." 520 U.S. at 41. She described the Court's opinion as "sensitive to this problem * * *." *Ibid.* The Federal Circuit wielded its hatchet without exhibiting any comparable sensitivity, creating instead retroactive devastation of what patent holders reasonably would have believed their rights to be.[7]

The Federal Circuit decision also discriminates against foreign applicants. U.S. patent applications by foreigners are typically straight translations of the applications filed in the applicant's home country. The format of the application often differs from that found in U.S. practice, and the translation may be in idiomatic English. The claims of such applications often require amendment or complete rewriting to satisfy the formal requirements of U.S. patent laws. This was the case with the Stoll patent presently at issue. PTO procedure contemplates such filings and provides mechanisms to effect the necessary changes. 37 C.F.R. 1.52(a). Under the rules enacted by the Federal Circuit, the foreign patentee loses the doctrine of

[7] The new rules also sabotage the settled expectations of the PTO and its examiners, who have conducted their examinations of patent applications on the assumption that the amendments they required or encouraged would have only certain narrow, well-understood consequences — consequences far more modest than those that would attach under the new Federal Circuit rules.

equivalents and finds his patent of little use in this country. Should other nations react, the result may be damaging to U.S. patentees seeking foreign patent protection.

The United States has long been interested in harmonizing foreign and domestic patent rules. In recent years, Congress has enacted legislation specifically geared to this goal. The patent term is now 20 years from filing, and once-secret patent applications are now being published, all to achieve harmonization with foreign patent systems. 35 U.S.C. 154(a)(2); 35 U.S.C. 122(b). The United States has also encouraged foreign nations to adopt strong patent laws that protect the innovative accomplishments of U.S. companies. Some nations, including Japan, only recently adopted a doctrine of equivalents. The Federal Circuit's abrupt reversal of course, contrary to the interests of the United States, damages this important movement toward harmonization.

* * * * *

Any patent or copyright system involves trade-off between rewards to stimulate creativity and the costs of exclusivity. The traditional rules of prosecution history estoppel and this Court's cases, culminating in *Warner-Jenkinson*, have recognized the trade-off and achieved a balance between costs and benefits. Congress has acquiesced in that balance by leaving the doctrines of estoppel and equivalence undisturbed for well over a century. No reason appears why the Federal Circuit should be permitted to make its own public policy by dictating a dramatically different cost-benefit decision.

CONCLUSION

For the reasons set forth above, the decision of the Federal Circuit should be reversed.

Respectfully submitted.

ANDREW L. FREY
DONALD M. FALK
ROBERT L. BRONSTON
Mayer, Brown & Platt
1909 K Street, N.W.
Washington, D.C. 20006
(202) 263-3000

ROBERT H. BORK
Counsel of Record
Suite 1000
1150 17th Street, N.W.
Washington, D.C. 20036
(202) 862-5851

CHARLES R. HOFFMANN
GERALD T. BODNER
GLENN T. HENNEBERGER
ANTHONY E. BENNETT
Hoffmann & Baron, LLP
6900 Jericho Turnpike
Syosset, New York 11791
(516) 822-3550

Counsel for Petitioner

AUGUST 31, 2001

APPENDIX

APPENDIX

UNITED STATES CODE

TITLE 35 — PATENTS

CHAPTER 10 — PATENTABILITY OF INVENTIONS

* * *

§ 101. Inventions patentable

Whoever invents or discovers any new and useful process, machine, manufacture, or composition of matter, or any new and useful improvement thereof, may obtain a patent therefor, subject to the conditions and requirements of this title.

§ 102. Conditions for patentability; novelty and loss of right to patent

A person shall be entitled to a patent unless —

(a) the invention was known or used by others in this country, or patented or described in a printed publication in this or a foreign country, before the invention thereof by the applicant for patent, or

(b) the invention was patented or described in a printed publication in this or a foreign country or in public use or on sale in this country, more than one year prior to the date of the application for patent in the United States, or

(c) he has abandoned the invention, or

(d) the invention was first patented or caused to be patented, or was the subject of an inventor's certificate, by the applicant or his legal representatives or assigns in a foreign country prior to the date of the application for patent in this country on an application for patent or inventor's certificate filed more than twelve months

before the filing of the application in the United States, or

(e) the invention was described in a patent granted on an application for patent by another filed in the United States before the invention thereof by the applicant for patent, or on an international application by another who has fulfilled the requirements of paragraphs (1), (2), and (4) of section 371(c) of this title before the invention thereof by the applicant for patent, or

(f) he did not himself invent the subject matter sought to be patented, or

(g) before the applicant's invention thereof the invention was made in this country by another who had not abandoned, suppressed, or concealed it. In determining priority of invention there shall be considered not only the respective dates of conception and reduction to practice of the invention, but also the reasonable diligence of one who was first to conceive and last to reduce to practice, from a time prior to conception by the other.

§ 103. Conditions for patentability; non-obvious subject matter

A patent may not be obtained though the invention is not identically disclosed or described as set forth in section 102 of this title, if the differences between the subject matter sought to be patented and the prior art are such that the subject matter as a whole would have been obvious at the time the invention was made to a person having ordinary skill in the art to which said subject matter pertains. Patentability shall not be negatived by the manner in which the invention was made.

Subject matter developed by another person, which qualifies as prior art only under subsection (f) or (g) of section 102 of this title, shall not preclude patentability under this section where the subject matter and the claimed invention

were, at the time the invention was made, owned by the same person or subject to an obligation of assignment to the same person.

* * *

CHAPTER 11 — APPLICATION FOR PATENT

§ 111. Application

(a) IN GENERAL. —

(1) WRITTEN APPLICATION. — An application for patent shall be made, or authorized to be made, by the inventor, except as otherwise provided in this title, in writing to the Commissioner.

(2) CONTENTS. — Such application shall include —

(A) a specification as prescribed by section 112 of this title;

(B) a drawing as prescribed by section 113 of this title; and

(C) an oath by the applicant as prescribed by section 115 of this title.

(3) FEE AND OATH. — The application must be accompanied by the fee required by law. The fee and oath may be submitted after the specification and any required drawing are submitted, within such period and under such conditions, including the payment of a surcharge, as may be prescribed by the Commissioner.

(4) FAILURE TO SUBMIT. — Upon failure to submit the fee and oath within such prescribed period, the application shall be regarded as abandoned, unless it is shown to the satisfaction of the Commissioner that the delay in submitting the fee and oath was unavoidable or unintentional. The filing date of an

application shall be the date on which the specification and any required drawing are received in the Patent and Trademark Office.

(b) PROVISIONAL APPLICATION. —

(1) AUTHORIZATION. — A provisional application for patent shall be made or authorized to be made by the inventor, except as otherwise provided in this title, in writing to the Commissioner. Such application shall include —

(A) a specification as prescribed by the first paragraph of section 112 of this title; and

(B) a drawing as prescribed by section 113 of this title.

(2) CLAIM. — A claim, as required by the second through fifth paragraphs of section 112, shall not be required in a provisional application.

(3) FEE. —

(A) The application must be accompanied by the fee required by law.

(B) The fee may be submitted after the specification and any required drawing are submitted, within such period and under such conditions, including the payment of a surcharge, as may be prescribed by the Commissioner.

(C) Upon failure to submit the fee within such prescribed period, the application shall be regarded as abandoned, unless it is shown to the satisfaction of the Commissioner that the delay in submitting the fee was unavoidable or unintentional.

(4) FILING DATE. — The filing date of a provisional application shall be the date on which the specification and any required drawing are received in the Patent and Trademark Office.

(5) ABANDONMENT. — The provisional application shall be regarded as abandoned 12 months after the filing date of such application and shall not be subject to revival thereafter.

(6) OTHER BASIS FOR PROVISIONAL APPLICATION. — Subject to all the conditions in this subsection and section 119(e) of this title, and as prescribed by the Commissioner, an application for patent filed under subsection (a) may be treated as a provisional application for patent.

(7) NO RIGHT OF PRIORITY OR BENEFIT OF EARLIEST FILING DATE. — A provisional application shall not be entitled to the right of priority of any other application under section 119 or 365(a) of this title or to the benefit of an earlier filing date in the United States under section 120, 121, or 365(c) of this title.

(8) APPLICABLE PROVISIONS. — The provisions of this title relating to applications for patent shall apply to provisional applications for patent, except as otherwise provided, and except that provisional applications for patent shall not be subject to sections 115, 131, 135, and 157 of this title.

§ 112. Specification

The specification shall contain a written description of the invention, and of the manner and process of making and using it, in such full, clear, concise, and exact terms as to enable any person skilled in the art to which it pertains, or with which it is most nearly connected, to make and use the same, and shall set

forth the best mode contemplated by the inventor of carrying out his invention.

The specification shall conclude with one or more claims particularly pointing out and distinctly claiming the subject matter which the applicant regards as his invention.

A claim may be written in independent or, if the nature of the case admits, in dependent or multiple dependent form.

Subject to the following paragraph, a claim in dependent form shall contain a reference to a claim previously set forth and then specify a further limitation of the subject matter claimed. A claim in dependent form shall be construed to incorporate by reference all the limitations of the claim to which it refers.

A claim in multiple dependent form shall contain a reference, in the alternative only, to more than one claim previously set forth and then specify a further limitation of the subject matter claimed. A multiple dependent claim shall not serve as a basis for any other multiple dependent claim. A multiple dependent claim shall be construed to incorporate by reference all the limitations of the particular claim in relation to which it is being considered.

An element in a claim for a combination may be expressed as a means or step for performing a specified function without the recital of structure, material, or acts in support thereof, and such claim shall be construed to cover the corresponding structure, material, or acts described in the specification and equivalents thereof.

* * *

CHAPTER 28 — INFRINGEMENT OF PATENTS

§ 271. Infringement of patent

(a) Except as otherwise provided in this title, whoever without authority makes, uses or sells any patented invention, within the United States during the term of the patent therefor, infringes the patent.

* * *

(19)

Supreme Court, U.S.
FILED
OCT 31 2001

No. 00-1543

IN THE

Supreme Court of the United States

FESTO CORPORATION,

Petitioner,

v.

SHOKETSU KINZOKU KOGYO KABUSHIKI CO., LTD.
a/k/a SMC CORP. and SMC PNEUMATICS, INC.,

Respondents.

On Writ of Certiorari to the United States Court of Appeals for the Federal Circuit

---

BRIEF FOR RESPONDENTS

JAMES B. LAMPERT
HALE AND DORR LLP
60 State Street
Boston, Massachusetts 02109
(617) 526-6000

ARTHUR I. NEUSTADT
Counsel of Record
CHARLES L. GHOLZ
ROBERT T. POUS
OBLON, SPIVAK, MCCLELLAND,
MAIER & NEUSTADT, P.C.
1755 Jefferson Davis Highway
Arlington, Virginia 22202
(703) 413-3000

Counsel for Respondents

WILSON-EPES PRINTING CO., INC. – (202) 789-0096 – WASHINGTON, D. C. 20001

65 pp

BEST AVAILABLE COPY

QUESTIONS PRESENTED

1. Whether prosecution history estoppel applies to an amendment that narrows the scope of a claim (a) for a reason related to avoidance of prior art, or (b) for a reason unexplained on the public record of the patent prosecution, or (c), indeed (as the Federal Circuit held), "for any reason related to the statutory requirements for a patent."

2. Whether, as the Federal Circuit held, "when a claim amendment creates prosecution history estoppel, no range of equivalents is available for the amended claim element."

CORPORATE DISCLOSURE STATEMENT

SMC Corporation, the parent of SMC Pneumatics, Inc. (now SMC Corporation of America), has no parent or other holder of 10% or more of its stock.

TABLE OF CONTENTS

page

QUESTIONS PRESENTED i

CORPORATE DISCLOSURE STATEMENT ii

TABLE OF CONTENTS iii

TABLE OF AUTHORITIES v

STATEMENT OF THE CASE 1

A. Patent Applications and Their Prosecution 2

B. Factual Background 6

1. Rodless Cylinders 6

2. The Absence of Literal Infringement 6

3. Prosecution History: The Stoll Patent 8

4. Prosecution History: The Carroll Patent ... 9

C. This Litigation 10

1. District Court Proceedings 10

2. Panel Decisions 12

3. The En Banc Decision 15

SUMMARY OF THE ARGUMENT 18

ARGUMENT 20

I. Festo's Amendments Generated Prosecution History Estoppel 20

A. Festo's Dual-Sealing-Ring Amendments, Which Were Made to Avoid Prior Art, Fall Within A Core Circumstance Generating Estoppel 20

B. Festo's Magnetizable-Sleeve Amendment Falls Within A Core Circumstance Generating Estoppel 21

C. The Federal Circuit Properly Held Estoppel Applicable to Any Substantively Scope-Narrowing Amendment Made To Satisfy A Requirement for Issuance of the Patent 23

II. The Applicable Estoppel Bars Equivalents Coverage of the Accused Nonliterally Infringing Devices 27

A. This Court's Governing Precedents, *Exhibit Supply* and *Warner-Jenkinson*, Directly Support the Federal Circuit's Holding That Equivalents Coverage Is Barred 27

B. The Federal Circuit, Based On Its Unique Experience, Properly Adopted The "Complete Bar" Rule In Preference To The Irretrievably Unpredictable "Flexible" Approach 31

C. The Federal Circuit's Experience-Based Judgment Is Not Defeated By Any Reasonable Reliance Interest Or Other Overriding Policy Objection 42

CONCLUSION 48

TABLE OF AUTHORITIES

Cases:

Advanced Display Systems, Inc. v. Kent State University, 212 F.3d 1272 (Fed. Cir. 2000), *cert. denied*, 121 S. Ct. 1226 (2001) 47

Ajinomoto Co. v. Archer-Daniels-Midland Co., 228 F.3d 1338 (Fed. Cir. 2000), *cert. denied*, 121 S. Ct. 1957 (2001) 47

BAI v. L & L Wings, 160 F.3d 1350 (Fed. Cir. 1998) 26

Bonito Boats, Inc. v. Thunder Craft Boats, Inc., 489 U.S. 141 (1989) 25

Brenner v. Manson, 383 U.S. 519 (1966) 4

C.R. Bard, Inc. v. Medtronic, Inc., 250 F.3d 760 (Fed. Cir. 2000) 47

Caterpillar, Inc. v. Deere & Co., 224 F.3d 1374 (Fed. Cir. 2000) 44, 47

Clearstream Wastewater Systems, Inc. v. Hydro-Action, Inc., 206 F.3d 1440 (Fed. Cir. 2000) 47

Comark Communications, Inc. v. Harris Corp., 156 F.3d 1182 (Fed. Cir. 1998) 46

Corning Glass Works v. Sumitomo Electric U.S.A., 868 F.2d 1251 (Fed. Cir. 1989) 46

Cybor Corp. v. FAS Technologies, Inc.,
138 F.3d 1448 (Fed. Cir. 1998) 46

Dow Chemical Co. v. United States,
226 F.3d 1334 (Fed. Cir. 2000) 47

Doyle v. Crain Indus., Inc.,
243 F.3d 564 (Fed. Cir. 2000) 47

Ekco Prods. Co. v. Chicago Metallic Mfg. Co.,
347 F.2d 453 (7th Cir. 1965) 18

Embrex, Inc. v. Service Eng'g Corp.,
216 F.3d 1343 (Fed. Cir. 2000) 47

Envirco Corp. v. Clestra Cleanroom, Inc.,
209 F.3d 1360 (Fed. Cir. 2000) 47

Exhibit Supply Co. v. Ace Patents Corp.,
315 U.S. 126 (1942) ..... *passim*

Festo Corp. v. Shoketsu Kinzoku Kogyo Kabushiki Co.,
187 F.3d 1381 (Fed. Cir. 1999) 13

Fiskars, Inc. v. Hunt Mfg. Co.,
221 F.3d 1318 (Fed. Cir. 2000), *cert. denied*,
121 S.Ct. 1603 (2001) 46, 48

Fonar Corp. v. General Elec. Co.,
107 F.3d 1543 (Fed. Cir. 1997) 46

General Elec. Co. v. Wabash Appliance Corp.,
304 U.S. 364 (1938) 25

General Surgical Innovations, Inc. v. Origin Medsystems, Inc.,
250 F.3d 761 (Fed. Cir. 2000) 47

Goodwall Constr. Co. v. Beers Constr. Co.,
991 F.2d 751 (Fed. Cir. 1993) 46

Goodyear Dental Vulcanite Co. v. Davis,
102 U.S. 222 (1880) 28

Graham v. John Deere Co.,
383 U.S. 1 (1966) 38

Graver Tank & Mfg. Co. v. Linde Air Products Co.,
336 U.S. 271 (1949) 28, 47

Heidelberg Harris, Inc. v. Mitsubishi Heavy Industries, Ltd.,
243 F.3d 560 (Fed. Cir. 2000) 47

Hilgraeve Corp. v. McAfee Associates, Inc.,
224 F.3d 1349 (Fed. Cir. 2000) 47

Honeywell, Inc. v. Litton Systems, Inc.,
520 U.S. 1111 (1997) 12, 14

Hughes Aircraft Co. v. United States,
717 F.2d 1351 (Fed. Cir. 1983) 18, 34, 43

Hughes Aircraft Co. v. United States,
140 F.3d 1470 (Fed. Cir. 1998) 12

Hughes Aircraft Co. v. United States,
148 F.3d 1384 (Fed. Cir. 1998) 12

IMS Technology, Inc. v. Haas Automation, Inc.,
206 F.3d 1422 (Fed. Cir. 2000), *cert. denied*,
530 U.S. 1299 (2001) 47

Indian Creek Mesquite, Inc. v. W.W. Wood, Inc.,
250 F.3d 761 (Fed. Cir. 2000) 47

INS v. St. Cyr,
121 S.Ct. 2271 (2001) 33

Insta-Foam Prods., Inc. v. Universal Foam Systems, Inc.,
906 F.2d 698 (Fed. Cir. 1990) 46

Iscar Ltd. v. Sandvik AB,
243 F.3d 558 (Fed. Cir. 2000) 47

I.T.S. Rubber Co. v. Essex Rubber Co.,
272 U.S. 429 (1926) 28

Kinzenbaw v. Deere & Co.,
741 F.2d 383 (Fed. Cir. 1984) 18

Kraft Foods, Inc. v. ITC,
203 F.3d 1362 (Fed. Cir. 2000) 46, 48

Laitram Corp. v. Cambridge Wire Cloth Co.,
863 F.2d 855 (Fed. Cir. 1988) 46

Lampi Corp. v. American Power Prods., Inc.,
228 F.3d 1365 (Fed. Cir. 2000) 47

Landgraf v. USI Film Prods.,
511 U.S. 244 (1994) 33

Lifescan, Inc. v. Home Diagnostics, Inc.,
76 F.3d 358 (Fed. Cir. 1996) 46

Litton Systems, Inc. v. Honeywell, Inc.,
140 F.3d 1449 (Fed. Cir. 1998) 12, 14, 26, 39

Litton Systems, Inc. v. Honeywell, Inc.,
145 F.3d 1472 (Fed. Cir. 1998) 12, 14, 30, 39, 45

London v. Carson Pirie Scott & Co.,
946 F.2d 1534 (Fed. Cir. 1991) 44

Loral Fairchild Corp. v. Sony Corp.,
181 F.3d 1313 (Fed. Cir. 1999), *cert. denied*,
528 U.S. 1075 (2000) 26

Magnivision, Inc. v. Bonneau Co.,
250 F.3d 758 (Fed. Cir. 2000) 47

Markman v. Westview Instruments, Inc.,
517 U.S. 370 (1996) 33, 34

Messagephone, Inc. v. SVI Systems, Inc.,
243 F.3d 556 (Fed. Cir. 2000) 47

Miles Labs., Inc. v. Shandon Inc.,
997 F.2d 870 (Fed. Cir. 1993) 46

Mycogen Plant Science, Inc. v. Monsanto Co.,
252 F.3d 1306 (Fed. Cir. 2001) 15

Nationwide Chemical Corp. v. Wright,
584 F.2d 714 (5th Cir. 1978) 18

Northern Telecom Ltd. v. Samsung Electronics Co.,
215 F.3d 1281 (Fed. Cir. 2000) 47

Optical Disc Corp. v. Del Mar Avionics,
208 F.3d 1324 (Fed. Cir. 2000) 46, 47

Overhead Door Corp. v. Chamberlain Group, Inc.,
194 F.3d 1261 (Fed. Cir. 1999) 46

Pioneer Magnetics Inc. v. Micro Linear Corp.,
238 F.3d 1341 (Fed. Cir. 2001) 22

Read Corp. v. Portec, Inc.,
970 F.2d 816 (Fed. Cir. 1992) 46

Richardson-Vicks Inc. v. Upjohn Co.,
122 F.3d 1476 (Fed. Cir. 1997) 38

Rivera-Davila v. Asset Conservation, Inc.,
230 F.3d 1378 (Fed. Cir. 2000) 47

Ruiz v. A.B. Choice Co.,
234 F.3d 654 (Fed. Cir. 2000) 47

Sage Products Inc. v. Devon Industries Inc.,
126 F.3d 1420 (Fed. Cir. 1997) 48

Schriber-Schroth Co. v. Cleveland Trust Co.,
311 U.S. 211 (1940) 28

Shepard v. Carrigan,
116 U.S. 593 (1886) 28

SMC Corp. v. Festo Corp.,
520 U.S. 1111 (1997) 12

Smith v. Magic City Kennel Club,
282 U.S. 784 (1931) 28

Southwest Software, Inc. v. Harlequin Inc.,
226 F.3d 1280 (Fed. Cir. 2000) 47

Stryker Corp. v. Davol Inc.,
234 F.3d 1252 (Fed. Cir. 2000) 47

Sun Studs, Inc. v. ATA Equip. Leasing, Inc.,
872 F.2d 978 (Fed. Cir. 1989) 46

Ta Instruments, Inc. v. Perkin-Elmer Corp.,
250 F.3d 756 (Fed. Cir.), *cert. denied*,
531 U.S. 1013 (2000) 48

Tate Access Floors, Inc. v. Maxcess Technologies, Inc.,
222 F.3d 958 (Fed. Cir. 2000) 47

Turbocare Division v. General Electric Co.,
264 F.3d 1111 (Fed. Cir. 2001) 15, 46

Uniroyal, Inc. v. Rudkin-Wiley Corp.,
939 F.2d 1540 (Fed. Cir. 1991) 46

United Carbon Co. v. Binney & Smith Co.,
317 U.S. 228 (1942) 25

United States v. Borden Co.,
308 U.S. 188 (1939) 33

United States v. Hughes Aircraft Company,
520 U.S. 1183 (1997) 12

United States v. Hughes Aircraft Co.,
525 U.S. 1177 (1999) 12

United States v. Nordic Village, Inc.,
503 U.S. 30 (1992) 33

Universal Oil Prods. Co. v. Globe Oil & Refining Co.,
322 U.S. 471 (1944) 25

Vanguard Prods. Corp. v. Parker Hannifin Corp.,
234 F.3d 1370 (Fed. Cir. 2000) 47

Vermeer Mfg. Co. v. Charles Machine Works, Inc.,
251 F.3d 168 (Fed. Cir. 2000) 48

Viskase Corp. v. American Nat'l Can Co.,
261 F.3d 1316 (Fed. Cir. 2001) 46

Warner-Jenkinson Co. v. Hilton Davis Chemical Co.,
520 U.S. 17 (1997) ..... *passim*

Weber Elec. Co. v. E.H. Freeman Elec. Co.,
256 U.S. 668 (1921) 28

YBM Magnex, Inc. v. ITC,
145 F.3d 1317 (Fed. Cir. 1998) 46

Zi Corp. v. Tegic Communications Inc.,
243 F.3d 564 (Fed. Cir. 2000) 47

Zygo Corp. v. Wyko Corp.,
79 F.3d 1563 (Fed. Cir. 1996) 46

Statutes:

1952 Patent Act 1, 28

35 U.S.C.

§ 101 4

§ 102 14

§ 103 14

§112 ..... 8, 9, 22, 26

§ 112, ¶ 1 4

§ 112, ¶ 2 ..... 4, 26

§ 112, ¶ 6 ..... 4, 37, 38

§§ 134, 141-145 5

§ 154(a)(1) 2

§§ 251, 252 15

§§ 301-307 9

Rules:

37 C.F.R.

§ 1.11 5

§1.56 8

§ 1.510 9

Other Materials:

D. Chisum, *Patents*

5A § 18.03 (1998) 5

5A § 18.05 (1998) 5, 42

5A § 18.05 (1998 & 2000 Supp.) 13

13 §§ 5410-5418 (1998 & 2000 Supp.). 13

R. Merges, *Patent Law and Policy* (2d ed. 1997) 5

Note, *To Bar or Not to Bar: Prosecution History Estoppel After Warner-Jenkinson*, 111 Harv. L. Rev. 2330 (1998) 43

Otterstedt, *Unwrapping File Wrapper Estoppel in the Federal Circuit: A New Economic Policy Approach*, 67 St. John's L. Rev. 405 (1993) 43

PTO, *Manual of Patent Examining Procedure* 3, 24, 25

§ 2171 26

§§ 2172-2173 26

§ 2173 37

§§ 2183-2186 4

2 P. Rosenberg, *Patent Law Fundamentals* (2d ed. June 2000). 45

J. Sheldon, *How to Write a Patent Application* (Practising Law Institute 2000) 5

Smith, *The Federal Circuit's Modern Doctrine of Equivalents in Patent Infringement*, 29 Santa Clara L. Rev. 901 (1989) 42

Strawbridge et al., Area Summary, *Patent Law Developments in the United States Court of Appeals for the Federal Circuit During 1986*, 36 Am. U.L.Rev. 861 (1987) 42

BRIEF FOR RESPONDENTS

STATEMENT OF THE CASE

Petitioner Festo obtained the two patents involved in this case only after submitting amendments to narrow the broader claims it initially submitted to the Patent and Trademark Office (PTO). To obtain the Stoll patent, Festo added two limitations (or elements) to narrow the claimed invention: one (the requirement of two sealing rings, one at each end of the piston) was added to avoid prior art; the other (the requirement of magnetizable material in the sleeve) was added for a reason that Festo has insisted is "a mystery" on the public record. To obtain the Carroll patent, Festo amended its claims to add a similar requirement of two sealing rings that it added to obtain the Stoll patent – again, to avoid prior art Festo had discovered (and therefore was obliged to disclose).

The accused device of respondent SMC does not have either of the two elements added by Festo to narrow its claims. In suing SMC for infringement, Festo, though it had added these elements in order to obtain its patents, dismissed these elements as "unimportant" and asserted that their absence was "equivalent" to their presence. The aspect of this case now before this Court concerns whether that assertion of infringement under the doctrine of equivalents is barred by the longstanding limitation on that doctrine, prosecution history estoppel (formerly called file wrapper estoppel), as set forth in this Court's governing precedent prior to the enactment of the 1952 Patent Act, *Exhibit Supply Co. v. Ace Patents Corp.*, 315 U.S. 126 (1942), and as confirmed in *Warner-Jenkinson Co. v. Hilton Davis Chemical Co.*, 520 U.S. 17 (1997).

The Federal Circuit, after struggling with a large number of cases presenting important doctrinal issues about prosecution history estoppel, decided to hear this case *en banc*, invited participation by interested *amici*, set forth questions for the

parties and *amici* to answer, and then answered those questions pursuant to its congressional mandate to resolve issues unique to patent law. Based upon its unique experience of grappling with application of prosecution history estoppel for 20 years, the Federal Circuit concluded that (a) estoppel applies whenever an amendment substantively narrows a claim to satisfy a requirement for issuance of the requested patent and (b) the effect of the estoppel is not to be determined by an "unworkable" (because profoundly unpredictable) "flexible" approach, but is simply to bar any equivalent for the particular claim element added by the narrowing amendment. Those rulings, and the particular estoppel holdings here, are correct. In particular, the amendments here generate estoppel, as they were *either* made to avoid prior art *or* unexplained, in either case squarely covered by the holding of *Warner-Jenkinson*. And the scope of estoppel extends to the accused devices under the clear rule of *Exhibit Supply*, as they were embraced by the initially submitted claims but then excluded from the coverage of the narrowed claims.

A. Patent Applications and Their Prosecution

A patent application includes a "specification" and "claims." The specification must provide the public disclosure, including how to make and use the invention, that is the *quid pro quo* for the grant of patent rights. The claims, however, define the boundaries of the patent protection. Each claim is a carefully drafted paragraph that specifies with precision the subject matter over which the patentee, upon issuance, has exclusive rights (to make, sell, use, etc.) for the 20 year period of the patent. 35 U.S.C. § 154(a)(1).

In a claim, less is more and more is less. The greater the number of limitations (elements, requirements) set forth in a particular claim, the narrower the substantive scope of what is covered, since infringement requires meeting *all* of the claim

elements (literally or by an equivalent). Conversely, greater coverage, and hence a more valuable patent, is secured by omitting any limitation that is not needed to satisfy the various requirements of a valid, enforceable patent – novelty, nonobviousness, adequate public disclosure for the full scope of the claimed invention, etc. For example, a patent applicant might claim (1) a pencil, (2) a wooden pencil, (3) a wooden pencil with a graphite writing element, (4) a wooden pencil with a graphite writing element with an eraser, or (5) a wooden pencil with a graphite writing element and a gum eraser. Each such claim provides the patentee narrower patent coverage, and a less valuable patent, than its predecessor in the list.

It has always been the fundamental professional responsibility of patent attorneys prosecuting an application to resist adding any scope-restricting element to their claims, unless necessary to satisfy a requirement for issuance. A new limitation is added only when the choice is between a patent with narrowed claims or no patent at all. And the choice of *what* limitation to add is made according to the same imperative: it is prosecuting attorneys' duty and practice to craft amendments to effect the least narrowing of scope required to meet a patentability requirement. The applicant "is master of his claims." Pet. App. 67a (Lourie, J., concurring).

The process of PTO examination focuses the applicant's attention, claim by claim, on what is needed to secure issuance, and the PTO determinations address the *meaning* of the claims. In the entire voluminous guide to patent examination, the PTO's *Manual of Patent Examining Procedure*, there is no directive for the PTO to consider any available range of "equivalents" – either *ab initio* or in reviewing amendments –

in applying the standards for issuance of the patent.[1] Based on a claim's meaning, the examiner may point to prior art (*e.g.*, publications, patents, real-world products) that he believes makes that claimed invention obvious or not novel; or the applicant may on its own identify particular prior art that raises the same question.[2] If the applicant cannot disprove the concerns, it must make a change to narrow the claim, specifically focusing on adding whatever new limitation is needed to distinguish prior art (or, for example, adhere to a more limited public disclosure or conform to its own statement of its invention or provide the required clarity, *see* note 2, *supra*). Among the tools of narrowing the applicant may use is "means plus function" claim language (35 U.S.C. § 112, ¶ 6) and even negative claim language that explicitly excludes a particular prior art feature. *See* page 37, *infra*.

The applicant has every incentive to make only the minimally required change, to preserve as much of the original broader coverage as it possibly can. *See*, *e.g.*, *Brenner v. Manson*, 383 U.S. 519, 534 (1966) (noting "the highly developed art of drafting patent claims" for purposes of

---

[1]A form of equivalents analysis does, of course, play a role in evaluating claims in "means plus function" form, because the statutory authority, 35 U.S.C. § 112, ¶ 6, makes express reference to "equivalents." *See MPEP* §§ 2183-2186.

[2]The examiner may identify other ways in which a claim fails to meet a requirement for issuance, such as lack of utility (35 U.S.C. § 101), or a claim's lack of sufficient support in the specification to meet the enablement and other public disclosure requirements (35 U.S.C. § 112, ¶ 1), or a claim's going beyond what the applicant has made clear it regards as a more limited invention (35 U.S.C. § 112, ¶ 2, second requirement) or even a claim's insufficient definiteness (under 35 U.S.C. § 112, ¶2, first requirement) to put the public on notice of the boundaries of the asserted zone of exclusivity, within which others cannot compete or innovate without permission.

"broadening the scope of the claim as widely as possible"); R. Merges, *Patent Law and Policy* at 11 (2d ed. 1997) ("The overall goal when drafting claims is to make them as broad as the Patent Office will allow."); J. Sheldon, *How to Write a Patent Application* at 1-2 (Practising Law Institute 2000) (Applicant's objective: "[c]laiming the invention sufficiently broadly so that the most talented experts in the field cannot design around the claims for the next twenty years"). The applicant also has the right to appeal an examiner's rejection-based request for unwarranted narrowing, inside the PTO and in the courts. 35 U.S.C. §§ 134, 141-145. Moreover, when submitting an amended claim, the applicant has every incentive to make only the barest possible statement of explanation: the applicant will typically seek to avoid any statement that might later be read as a disclaimer of coverage.[3] Commonly, therefore, the explanation is an asserted conclusion only, stating no more, for example, than that the claims as amended overcome the rejection (which the examiner must check for himself) or that the prior art does not disclose or suggest the combination of features now required in the narrowed amended claim.

This entire process is recorded in the public record that becomes the prosecution history (or file history or file wrapper), which is available to the public upon request from the PTO and always is consulted in any subsequent effort to construe and apply the claim language. *See* 37 C.F.R. § 1.11. Critically, any skilled reader of the prosecution history understands, and can expect the applicant to act on, the

---

[3]Apart from amendments themselves, statements by the applicant have long been a basis for estoppel of asserted equivalents coverage and, also, for narrowing the available construction of the claim language. *See* 5A D. Chisum, *Patents* §§ 18.03[2][d] (claim construction), 18.05[2][c] (estoppel).

incentive to adopt only the minimally needed narrowing amendments, with attention squarely focused on the new elements that make the difference between rejection (or possible rejection in the case of a preemptive amendment) and issuance of the claim. Any skilled reader must presume that the patent applicant chose its narrowing-amendment language carefully, surrendering all he left out.

B. Factual Background

1. Rodless Cylinders

Both the Stoll patent (issued 1982) and the Carroll patent (issued in narrowed form on reexamination in 1988) are directed to minor design changes in magnetic rodless cylinders that appear in a crowded field of prior art. *See* Fed. Cir. Jt. App. A8631-35; JA II-157 to II-173 (magnetic rodless cylinders in prior art beginning in 1960s). A magnetic rodless cylinder has three basic parts, *i.e.*, a piston, a cylinder, and a sleeve (sometimes called a "carriage"). The piston is on the inside of the cylinder and is moved by fluid under pressure. The sleeve is on the outside of the cylinder, and is magnetically coupled to the piston. The magnetic attraction between the sleeve and the piston, both of which have strong magnets mounted therein, causes the sleeve to follow the piston when the piston is moved by fluid pressure along the inside of the cylinder. Pet. App. 33a.

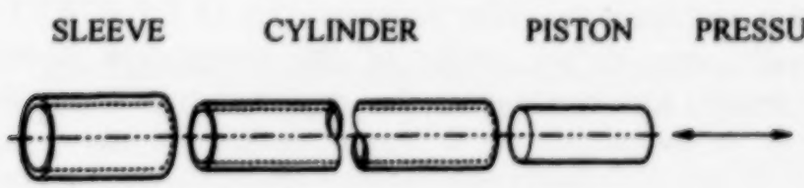

2. The Absence of Literal Infringement

As is settled in this litigation, SMC's accused rodless cylinders do not literally infringe either of Festo's two patents.

SMC's cylinders do not have "magnetizable" material in the sleeve (they use an aluminum alloy), which is required by claim 1 of the Stoll patent. JA II-6.[4] SMC's cylinders also do not have any "sealing ring" at one end of their pistons – thus allowing fluid, with any impurities, to come between the piston's magnets and the inside of the cylinder – whereas both claim 1 of the Stoll patent and claim 9 of the Carroll patent require "sealing" rings at *both* ends (JA II-6, II-131): the Stoll patent specifies softness in the sealing ring to perform its wiping function, and the Carroll patent requires that the sealing rings be "resilient" to "effect a fluid-tight seal." JA II-4, II-131.[5]

Contrary to Festo's repeated implication, SMC did not engage in any copying of Festo's sometimes unsatisfactory (JA I-81 to I-89) particular refinement of the well-known magnetic rodless cylinders already in existence. As stated by the district court, "you're right, there is no evidence of copying." JA I-151.

---

[4]The Stoll patent's specification notes that it is beneficial to use magnetizable material in the sleeve since doing so will minimize "magnetic leakage fields" that can cause "undesirable braking forces." JA II-4.

[5]Claim 1 of the Stoll patent recites that the two sealing rings, one at each end of the piston, are required "for wiping said internal wall as said piston moves along said tube to thereby cause any impurities that may be present in said tube to be pushed along said tube so that said first annular magnets will be free of interference from said impurities." JA II-6. The specification of the Stoll patent explains that having separate sealing and guide rings allows the former to be soft (and better at sealing) while the latter can remain hard (for better guiding). JA II-4; *see also* JA I-59 (Festo trial memorandum stating that the prior art ring was either too hard or too soft and that, when only a hard guide ring is used, "the sealing and wiping functions are not effectively obtained"); JA I-102 to I-106 (Stoll testimony stating that, with only the hard guide ring, "you won't get a leakage free surface"). JA I-104. *See also* JA I-118 to I-121.

3. Prosecution History: The Stoll Patent

After the German Patent Office brought to Festo's attention (during the prosecution of Festo's corresponding German patent application) two pertinent prior art German patents, which Festo was required to disclose to the PTO (37 C.F.R. §1.56), Festo narrowed its main claim by adding both the requirement of a magnetizable sleeve and the requirement of sealing rings at each end of the piston.[6] Festo advised the PTO of these prior art patents and amended its main claim as part of its response to the PTO's first action on Festo's application. It did so even though the examiner had made no request that Festo either narrow or "clarify" its main claim with respect to either the material in the sleeve or the number and location of the sealing rings. JA II-30 to II-32.[7]

Festo's addition of the magnetizable sleeve element was

---

[6]Festo stated that "neither of these two references" – the two prior art German patents cited by Festo (27 37 924 and 19 82 379) – "discloses the use of a structure preventing the interference by impurities located inside the tube and on the outside of the tube while the arrangement is moved along the tube." JA II-40; I-120 to I-121. The sealing rings are what Festo included to prevent impurities. *See* note 5, *supra*. In fact, although it is irrelevant whether Festo was right in its reading of the prior art (*see Warner-Jenkinson*, 520 U.S. at 33 n.7), the German patents do not disclose a (soft) sealing ring mated with a (hard) guide ring at each end of the piston. JA II-109 to II-120, II-157 to II-173.

[7]The 35 U.S.C. §112 rejections noted by Festo did not require the addition of the sealing ring or the magnetizable material. The rejection that the claims were "improperly multiply dependent" (Pet. App. 40a) applied only to claims 4-12 and not to Festo's main claim (JA II-31) and, in any event, was remedied by having each dependent claim depend from only one claim rather than from multiple claims. JA II-25 to II-26, II-38 to II-39. The rejection that it was not clear whether the device was "a true motor or magnetic clutch" (Pet. App. 40a) was remedied by changing the term "linear motor" to "[t]he arrangement" and "magnetically coupled arrangement." JA II-37 to II-39, II-62 to II-63.

unexplained on the PTO record. It was not responsive to the examiner's rejection, and "there is no statement in the prosecution history that explains why this element was included in the independent claim." Pet. App. 50a. In the subsequent infringement litigation, the district court agreed with Festo's position "that the reason for the magnetizable sleeve amendment was 'a mystery,' because it did not appear to be related to any of the examiner's 35 U.S.C. §112 rejections, and it did not appear to distinguish the invention over the prior art." Pet. App. 44a; JA I-75.[8]

Festo's addition of the requirement of two sealing rings has an explanation evident from the PTO record. As held by the Federal Circuit, the addition "appears to have been made to distinguish the prior art." Pet. App. 52a. Specifically, "the amendment adding the sealing ring element was made to distinguish the German patents" that Festo had cited to the examiner. *Id.*

4. Prosecution History: The Carroll Patent

The Carroll patent originally issued in December 1973 (JA II-122), but 15 years later Festo requested reexamination in view of a prior art German patent. JA II-133 to II-142; *see* 35 U.S.C. §§ 301-307 (procedure for reexamination of issued patent in light of prior art not previously considered); 37 C.F.R. § 1.510. During the reexamination, Festo canceled its main claim and submitted an entirely new main claim 9, which requires a host of specific features including the pair of resilient sealing rings. JA II-180 to II-187. In its remarks

---

[8]Festo's insistence on the unexplained nature of the magnetizable-sleeve element was unavoidable for it. The only alternative is the conclusion, evident from the public record, that "magnetizable" was added to distinguish over the prior art submitted by Festo: German patent 27 37 924 expressly discloses a "carriage" (*i.e.*, sleeve) that is "made from non-magnetic material." JA II-117.

accompanying the amendment, Festo "stated that the amendment defined the 'features of the patentee's invention that distinguish over the art of record, including' the German patent cited in the request for reexamination" and further argued "that the combination of features recited in the claims, which includes the pair of sealing rings, distinguished the claims over the German patent." Pet. App. 55a; JA II-180 to II-187. The examiner accepted the narrowing amendment, citing the claimed "combination" in his reasons for allowance. JA II-189; *see* Pet. App. 55a. As held by the Federal Circuit, this amendment "was motivated by at least one reason related to patentability: a desire to avoid the prior art." Pet. App. 55a.

C. This Litigation

In Festo's infringement suit against SMC, the absence of literal infringement by SMC's non-magnetizable sleeve, single seal magnetic rodless cylinders is settled. Pet. App. 48a, 53a. Festo relies only on the doctrine of equivalents to bring the SMC cylinders, though without a magnetizable sleeve and without sealing rings at both ends of the piston, within Festo's exclusivity rights granted by patent claims requiring one or both of those features. The Federal Circuit ultimately held that Festo was estopped by its PTO amendments to assert such equivalents, thus not having to decide the serious issue whether Festo had proved "equivalence" itself or, rather, had "vitiated" claim elements in derogation of *Warner-Jenkinson*.

1. District Court Proceedings

With respect to the Stoll patent, a Special Master, after extensive testimony, initially concluded that SMC was entitled to summary judgment of non-infringement of the Stoll patent, applying prosecution history estoppel to bar any equivalents of the magnetizable-sleeve element. JA I-40 to I-44, I-49 to I-52. Festo challenged that conclusion before the district court, however, insisting that it was a "mystery" why its attorney had

added the magnetizable sleeve element: "Dr. Stoll should not be held to unintentional limitations added incorrectly by an attorney of which he was not aware and of which he certainly did not intend." JA I-54; *see* JA I-56 (same). The district court accepted Festo's position "that the reason for the magnetizable sleeve element was 'a mystery'" and on that basis *refused* "to hold that prosecution history estoppel barred a finding that the Stoll patent was infringed under the doctrine of equivalents." Pet. App. 44a; *see* JA I-70 to I-76.

The court subsequently presided over a jury trial on (among other issues) whether SMC's nonmagnetizable sleeve and single-sealing-ring arrangement (at one end of the piston) were the equivalents of the required magnetizable sleeve and dual-sealing-ring arrangement. The accused SMC devices, with nonmagnetic sleeves, did not minimize magnetic leakage fields to prevent undesirable braking forces since they lacked the claimed magnetizable material to do so. *See* note 4, *supra*; JA I-142 to I-144. And they likewise did not prevent the fluid contact, and introduction of any impurities, the avoidance of which Festo expressly set forth as the function of its two-sealing-ring arrangement. *See* note 5, *supra*; JA I-142 to I-144.[9] Nevertheless, the jury found equivalence. Pet. App. 44a.

As for the Carroll patent, the district court granted summary judgment of infringement under the doctrine of equivalents for the SMC rodless cylinder models at issue. (It granted summary judgment of non-infringement with respect to other SMC rodless cylinder models not at issue here.). The

---

[9] Festo's assertion that a single two-way sealing ring at one end of the piston is the equivalent of two one-way sealing rings, one at each end of the piston, is a red herring. A single two-way sealing ring at one end of the piston leaves the other end of the piston unprotected from the entry of impurities since the hard guide ring by itself cannot effectively perform the wiping function. See note 5, *supra*; JA I-118 to I-121.

court simply deemed irrelevant to the Carroll patent the functions of impurity or dirt prevention made clear in the Stoll patent and required by the Carroll patent's claim language reciting "resilient sealing rings" in order "to effect a fluid-tight seal" (JA II-131). *See* JA I-79; Pet. App. 44a.

2. Panel Decisions

A panel of the Federal Circuit initially affirmed the district court's judgment. Pet. App. 190a. This Court, however, granted SMC's petition for a writ of certiorari, vacated the Federal Circuit decision, and remanded for reconsideration in light of *Warner-Jenkinson*, *supra*. *See SMC Corp. v. Festo Corp.*, 520 U.S. 1111 (1997). That GVR was one of three the Court issued in light of *Warner-Jenkinson*, the other two being *Honeywell, Inc. v. Litton Systems, Inc.*, 520 U.S. 1111 (1997), and *United States v. Hughes Aircraft Company*, 520 U.S. 1183 (1997). All three cases were set for rebriefing and reargument in the Federal Circuit.

Both *Litton* and *Hughes* were decided by panels of the Federal Circuit in April 1998, with both decisions ruling on the scope of estoppel in light of *Warner-Jenkinson*. *See Litton Systems, Inc. v. Honeywell, Inc.*, 140 F.3d 1449 (Fed. Cir. 1998); *Hughes Aircraft Co. v. United States*, 140 F.3d 1470 (Fed. Cir. 1998). The *Litton* case – involving a holding that estoppel applied, with a remand to determine what the scope of the estoppel was (among other issues) – generated vigorous dissents from denial of rehearing *en banc*. *Litton Systems, Inc. v. Honeywell, Inc.*, 145 F.3d 1472 (Fed. Cir. 1998). The *Hughes* case – a final resolution of infringement after 25 years of litigation – also generated a dissent from *en banc* rehearing (*Hughes Aircraft Co. v. United States*, 148 F.3d 1384 (Fed. Cir. 1998)), followed by an unsuccessful petition for certiorari by the United States. *United States v. Hughes Aircraft Co.*, 525 U.S. 1177 (1999).

The second panel decision in the present case came in April 1999, with the panel now finding it necessary to remand to the district court for further litigation over the requirement of two sealing rings in the Stoll patent (but not the Carroll patent) – particularly, whether prosecution history estoppel barred Festo's assertion of equivalents for that claim limitation. Pet. App. 156a. By the time SMC's rehearing petition was pending in the summer of 1999, however, the Federal Circuit had addressed the applicability and scope of estoppel in a large number of prosecution history estoppel cases since *Warner-Jenkinson*. *See* 5A D. Chisum, *Patents* § 18.05 (1998 & 2000 Supp.); 13 D. Chisum, *Patents*, Federal Circuit Topical Outline, §§ 5410-5418 (summarizing numerous estoppel decisions) (1998 & 2000 Supp.). There was a demonstrated need for clarification and panel-by-panel consistency.

The Federal Circuit on August 20, 1999, vacated the panel decision and set this case for rehearing *en banc*, stating five doctrinal questions for the parties and *amici* to address. Four of them concerned prosecution history estoppel. The fifth was specifically addressed to the required element-by-element standard or "all elements" rule, asking whether Festo's equivalents argument -- that the absence of an element (the magnetizable sleeve, the sealing ring) was equivalent to its presence -- "violate[d] *Warner-Jenkinson's* requirement that the application of the doctrine of equivalents 'is not allowed such broad play as to eliminate an element in its entirety,' 520 U.S. at 29." *Festo Corp. v. Shoketsu Kinzoku Kogyo Kabushiki Co.*, 187 F.3d 1381 (Fed. Cir. 1999); *see* Pet. App. 2a-3a (quoting the five questions).[10]

---

[10]The first question presented in Festo's certiorari petition is similar to the Federal Circuit's question one: "For the purposes of determining whether an amendment to a claim creates prosecution history estoppel, is 'a substantial reason related to patentability,' *Warner-Jenkinson Co. v. Hilton*

A number of *amici* accepted the Federal Circuit's invitation to participate – six companies and three lawyer groups. The companies were IBM, Kodak, Ford, Hewlett-Packard (HP), Proctor & Gamble (P&G), and Litton. There was broad agreement among the *amici* that estoppel was generated by unexplained amendments (Federal Circuit question 4) as well as by amendments made to satisfy a requirement for issuance even if voluntary (Federal Circuit question 2) and even if not made to overcome prior art (Federal Circuit question 1). Only on the Federal Circuit's question 3 – whether estoppel, where it applies, constitutes a bar to equivalents of the particular element added by narrowing amendment – did the *amici* differ.[11] The companies generally favored a bar, because of the need for clarity in patent boundaries, even though that position limited their own rights as substantial patent *holders*.

Davis Chem. Co., 520 U.S. 17, 33 (1997), limited to those amendments made to overcome prior art under §102 and §103, or does 'patentability' mean any reason affecting the issuance of a patent?" *See* Pet. App. 2a. Festo's second question presented is similar to the Federal Circuit's question three: "If a claim amendment creates prosecution history estoppel, under *Warner-Jenkinson* what range of equivalents, if any, is available under the doctrine of equivalents for the claim element so amended?" Pet. App. 2a-3a.

[11]Even Litton (still engaged, as it is today, in fighting *Litton v. Honeywell*) could not avoid the straightforward recognition (at page 9 of its Federal Circuit brief) that this Court's decision in *Exhibit Supply* establishes that a patentee surrenders any matter that was within the initial claim but then excluded from the amended claim:

> [t]hat case [*Exhibit Supply*], and the cases before and after it up to the present day, establish that when a patentee amends his claim to avoid the prior art, he gives up 'all that is embraced in th[e] difference' between what he first sought to claim, and what was finally accepted . . . .

3. The En Banc Decision

On November 29, 2000, the court rendered its *en banc* decision, deciding the estoppel questions and resolving this case. Pet. App. 1a-155a.[12] The court's rulings are limited to an amendment, made by the patent applicant in the PTO, that narrows the claim. The decision does not address the role of statements or arguments by the patent applicant in the PTO as a basis for estoppel. *See* note 3, *supra*. Nor does it speak to unamended claim elements or even to a non-narrowing amendment.[13]

---

[12]The *en banc* court, though it had pointedly set a question concerning whether Festo had established equivalence apart from estoppel (had Festo, in violation of *Warner-Jenkinson*, "vitiated" certain claim elements?), did not have to reach that non-estoppel question. With the panel decisions in this case vacated, there is accordingly no extant court of appeals ruling on SMC's contention that equivalents liability here exceeded the bounds allowed by *Warner-Jenkinson*. That issue remains open in this case if the Federal Circuit's judgment is not affirmed.

[13]The Federal Circuit recently made clear that a change from one term to another where both had the same meaning was not a narrowing. *Turbocare Division v. General Electric Co.*, 264 F.3d 1111 (Fed. Cir. 2001). That situation must be distinguished from a substantive narrowing of a claim term by amendment to limit it to a particular embodiment in the specification; that common pattern does involve a narrowing, though patentees may seek to dress up their amendment as a mere clarification of what they always "intended." What is determinative is objective substantive narrowing of the *claim*'s meaning, a familiar and well-settled inquiry under, for example, the reissue provisions of the Patent Code, 35 U.S.C. §§ 251, 252. *See* SG/PTO Br. at 17 n.3 (invoking reissue standard).

The SG/PTO brief also notes (at 16) that rewriting a dependent claim in independent form is not a narrowing. This statement is correct since the claim is substantively unchanged but incomplete since the cancellation of the broader independent claim which almost always accompanies such a rewriting does constitute a narrowing. *Mycogen Plant Science, Inc. v. Monsanto Co.*, 252 F.3d 1306, 1320 (Fed. Cir. 2001)

The court concluded, by a vote of 11 to 1, that a narrowing amendment generates estoppel if made *either* for a reason "unexplained" on the public record *or* for any reason related to the statutory requirements for a patent.[14] In particular, estoppel is not restricted to narrowing amendments made specifically to avoid prior art. The court explained that "the functions of prosecution history estoppel [the notice function of the claims and the prevention of recapture of surrendered subject matter] cannot be fully satisfied if substantial reasons related to patentability are limited to a narrow subset of patentability issues." Pet. App. 8a-11a. And the determination of the reason for an amendment, the court held, must be made on the basis of the public record (as understood through educated eyes, of course), not *post hoc* explanations. Pet. App. 47a-48a.[15] Because the amendments

---

("[T]he cancellation of a claim with a broad limitation in favor of one with a narrower limitation ... creates prosecution history estoppel."). This is not an issue in this case and Festo does not so assert since Festo cancelled broader independent claims in favor of narrower independent claims.

[14]The court also held, 11 to 1, that a voluntary amendment should be treated the same as a "required" amendment. Pet. App. 11a-13a. The court noted, in particular, that "the addition of the lower pH limit of 6" in *Warner-Jenkinson* "was not 'required' by the prior art rejection." Pet. App. 13a.

[15] "In her dissenting opinion, Judge Newman expresses the concern that we are penalizing the patent holder by limiting the evidence upon which he can rely to establish that a narrowing amendment was made for a purpose unrelated to patentability to what is contained in the prosecution history record. In response, we wish to make it clear that, in determining the reason for an amendment, a court can properly consider any attorney argument regarding the reason for the amendment that is supported by the prosecution history record. Permitting patent holders to rely on evidence extrinsic to the prosecution history record would undermine the public notice function of the patent record." Pet. App. 47a n.6.

at issue in the present case were either unexplained on the public record (as conceded by Festo's "mystery" assertion) or plainly related to prior art, they generated estoppel (indeed, did so without regard to the broader rule adopted by the court).

The court then addressed the scope of the applicable estoppel, *i.e.*, what if any equivalents are precluded, or remain available, when estoppel applies by virtue of a narrowing amendment that is determined to have been made for patentability reasons. The judgment on the facts of this case – that the estoppel barred Festo's assertion that the magnetizable-sleeve and dual-sealing-rings limitations had equivalents in SMC's accused devices (which did not have magnetizable sleeves or pairs of sealing rings) – produced only one expression of dissent (by Judge Newman). An eight-judge majority adopted a broader and more comprehensive "complete bar" rule for determining the scope of estoppel: when a narrowing amendment generates estoppel, the claim limitation added by the amendment is not subject to equivalents infringement; the patentee's eyes-open choice of the narrowing language defines the boundaries for that particular claim element. The patentee, of course, is free to establish equivalents for other claim elements. Pet. App. 13a-30a.

In reaching this conclusion, the court reasoned that this Court's decisions in *Exhibit Supply* and *Warner-Jenkinson*, and in other cases stressing the importance of public notice and PTO primacy, provided distinct support for this "complete bar" rule, though the *en banc* court did not rest (as it might have on the facts here) on those decisions as settling the issue. Pet. App. 13a-19a. The court explained, moreover, that its own precedents over the past 20 years had been inconsistent on this issue, some cases following a "flexible" approach (allowing some undefined range of equivalents for elements added by narrowing amendments), some cases following a strict "no equivalents" approach holding the patentee to the language of

the element added by amendment. Pet. App. 19a-24a.[16] The court then resolved the question by relying on its "nearly twenty years of experience in performing [its] role as the sole court of appeals for patent matters." Pet. App. 24a. It explained, based on its "long experience" (Pet. App. 25a), that the flexible approach was "unworkable" (Pet. App. 25a) because it defeated the definitional and notice function of patent claims, making the boundaries of forbidden territory "virtually unascertainable" and deterring investment in innovation in the proximity of patented subject matter. Pet. App. 28a.

SUMMARY OF ARGUMENT

The Federal Circuit, sitting *en banc*, did just what Congress created the court to do. It applied its unique expertise and experience, gained from reviewing patent-infringement cases year in and year out, to resolve two aspects of a judge-made portion of patent law. The Federal Circuit's judgment in this case and its broader resolutions of those questions – under what circumstances prosecution history estoppel applies based on a claim-narrowing amendment in the PTO and what if any equivalents remain for the amendment-added claim limitation if estoppel does apply – should be affirmed. The decision is supported by this Court's governing precedents and by the well-recognized policies of the patent law.

---

[16]The "flexible" approach grew out of then-interlocutory decision in *Hughes Aircraft Co. v. United States*, 717 F.2d 1351 (Fed. Cir. 1983) (*Hughes I*), which stated that estoppel, once found applicable, "may have a limiting effect" on available equivalents "within a spectrum ranging from great to small to zero." *Id.* at 1363. (The *Hughes Aircraft* litigation continued for a quarter century. *See* page 12, *supra*.) The stricter approach was articulated almost contemporaneously in *Kinzenbaw v. Deere & Co.*, 741 F.2d 383 (Fed. Cir. 1984), *see* Pet. App. 20a, as well as by pre-Federal Circuit regional appellate court precedent, *see, e.g.*, *Nationwide Chemical Corp. v. Wright*, 584 F.2d 714, 718-20 (5th Cir. 1978); *Ekco Prods. Co. v. Chicago Metallic Mfg. Co.*, 347 F.2d 453, 454-55 (7th Cir. 1965).

Estoppel applies here because the amendments at issue fall within the core circumstances giving rise to estoppel under this Court's decision in *Warner-Jenkinson*. They are either directly related to avoiding prior art or, as Festo must insist in this case, unexplained on any public record. Looking outside the public record would be inconsistent with the essential public notice policy of the patent law. More broadly, the Federal Circuit properly concluded that estoppel is generated by any scope-narrowing amendment to a claim made to satisfy a requirement for issuance of the patent. There is no sound basis – related to the public message of surrender of initially claimed territory – for picking out only some among the full range of requirements that Congress set for issuing a patent, requirements not limited to ensuring an advance over prior art but demanding both adequate and sufficiently precise public disclosure as well. And a limitation of the statutory grounds for amendments would produce practical problems.

The Federal Circuit also properly held that, once estoppel applies to the scope-narrowing amendment, it bars resort to the doctrine of equivalents for the amendment-added claim limitation: that "complete bar" rule defines what the patentee surrendered by that addition, namely, all matter originally claimed but then placed outside the narrowed claim. That rule is directly supported by this Court's authoritative decision in *Exhibit Supply* and was reinforced by *Warner-Jenkinson*. The rule is also overwhelmingly supported by a judgment that the Federal Circuit was, by its extensive experience, uniquely positioned to make: that the anti-innovation, anti-competition harms from the inherently unpredictable "flexible" approach to determining the scope of estoppel outweigh any interest of patentees in leeway on claim scope as to those elements they added in the PTO with necessarily focused attention on carefully choosing terms to minimize the amount of ceded coverage. Finally, no objection to the Federal Circuit's rule,

whether based on asserted reasonable reliance or other policies, stands up to analysis. The Federal Circuit has resolved a well-recognized confusion in its cases to bring the law into line with this Court's precedents and to add vital clarity to the patent system.

ARGUMENT

I. Festo's Amendments Generated Prosecution History Estoppel

The Federal Circuit held that prosecution history estoppel applied to Festo's amendments made to obtain its Stoll and Carroll patents. Those amendments come within the core circumstances generating estoppel under this Court's decision in *Warner-Jenkinson*, which made clear that estoppel applies, at a minimum, to amendments made to avoid prior art and to amendments that the patentee has not proved were made for some reason unrelated to patentability, *i.e.*, to unexplained amendments. The Federal Circuit's holding that estoppel applies in this case was therefore correct. So, too, was its broader ruling (not necessary to the resolution of this case) that estoppel is generated by a scope-narrowing amendment made to satisfy any requirement for issuance of the patent.

A. Festo's Dual-Sealing-Ring Amendments, Which Were Made to Avoid Prior Art, Fall Within A Core Circumstance Generating Estoppel

In *Warner-Jenkinson*, this Court confirmed the longstanding principle that prosecution history estoppel applies (to curtail assertion of infringement under the doctrine of equivalents) based on at least some amendments made by a patent applicant during prosecution of its application. 520 U.S. at 30-34. The Court rejected the notion that *every* amendment generates estoppel, no matter what the reason for the amendment. *Id.* at 30-31. The Court did not define a line

separating reasons that would generate estoppel from reasons that would not. It did, however, make unmistakably clear that on the estoppel-generating side of the line were "amendments made to avoid the prior art." *Id.* at 30.

Both of the dual-sealing-ring amendments in this case – in the Stoll patent and in the Carroll patent – were made to avoid prior art, as the Federal Circuit concluded. In each case, Festo included these new limitations in amendments submitted to the PTO with express reference to prior art – the newly disclosed German patent(s). And it is irrelevant whether, as Festo now tries to suggest, it erred in including these limitations as part of its effort to define claims that would avoid the German prior art. *Warner-Jenkinson*, 520 U.S. at 33 n.7, makes clear that Festo's reason is not to be re-evaluated in retrospect for its correctness. Estoppel, in short, plainly applies to the amendments requiring dual sealing rings.

B. Festo's Magnetizable-Sleeve Amendment Falls Within A Core Circumstance Generating Estoppel

This Court in *Warner-Jenkinson* reinforced the strength of the important principle of prosecution history estoppel by holding that, while the reason for an amendment is not irrelevant, the starting point for analysis is that an amendment was made for an estoppel-generating reason. 520 U.S. at 33-34. The Court adopted an express presumption, which it is the patentee's burden to overcome, that any amendment was made for an estoppel-generating reason. If the reason for an amendment adding a new claim element remains unexplained, "prosecution history estoppel would bar the application of the doctrine of equivalents as to that element." *Id.* at 33.

That principle applies to Festo's amendment of its Stoll claim to add the requirement of magnetizable material in the sleeve of its cylinders. By what it conspicuously does *not* say, Festo effectively concedes, as it positively insisted in the courts

below, that it is not possible to find within the PTO record some supposedly non-estoppel generating explanation for that amendment. Although Festo repeatedly alludes to Section 112, it is beyond dispute that the magnetizable-sleeve amendment had nothing whatever to do with the examiner's Section 112 rejections.[17]

To the extent that Festo suggests that the Federal Circuit was wrong in restricting the "explanation" to the PTO record, that suggestion is not only a reversal of course,[18] but Festo's position was rejected by 11 of the Federal Circuit judges. The reason is simple: the public notice policy of the patent law, as reaffirmed in *Warner-Jenkinson*, 520 U.S. at 29, 33-34, demands an objective standard, applied to publicly accessible materials, for the public to use in determining the reason for an amendment. "The public notice function of patents would be frustrated by forcing a patentee's competitors to guess whether a patent's claims were drafted and accepted in error." *Pioneer Magnetics Inc. v. Micro Linear Corp.*, 238 F.3d 1341, 1345 (Fed. Cir. 2001).

Contrary to Festo's suggestion, nothing in *Warner-*

---

[17]As noted above (note 8, *supra*), avoidance of the prior art non-magnetizable sleeve is the only explanation apparent on the public record. Hence Festo's original insistence on the unexplained character of its amendment.

[18]In its *en banc* brief before the Federal Circuit (Dec. 2, 1999), Festo conceded (at 62) that "if there is no reason which can be established from review of the file history and the patentee cannot establish a reason for the amendment, *Warner-Jenkinson* appears to hold that the element would be entitled no range of equivalents." Festo now tries to undo this concession by asserting that the holding in *Warner-Jenkinson* is restricted to an unexplained amendment that was "required." Festo Br. at 29-30. That is nonsensical: if the amendment was "required," it would be accompanied by the examiner's citation of the reason for the rejection, and so would not be unexplained.

Jenkinson states or implies that the remand in that case was for the purpose of permitting the patentee to submit new explanations for its amendments. The remand makes full sense, and is much better understood, as being for the purpose of having the judges best able to *read* the PTO record and other publicly accessible materials do so thoroughly in the first instance, with focused lawyer argument and expert assistance, if necessary, directed to understanding, but not adding to or altering, the explanation discernable from public materials. That view of the *Warner-Jenkinson* remand not only comports with the common practice of remanding cases for case-specific applications even on matters of law; it is the only reading consistent with this Court's pointed emphasis in *Warner-Jenkinson* on the need for public notice of patent boundaries, which would be undermined were patentees free to supplement the public record with new explanations not discernable by the public.

C. The Federal Circuit Properly Held Estoppel Applicable to Any Substantively Scope-Narrowing Amendment Made To Satisfy A Requirement for Issuance of the Patent

The Court in *Warner-Jenkinson*, having established that amendments made (as here) to avoid prior art or for otherwise unexplained reasons generate estoppel, carefully avoided any definitive statement of a standard for what other amendments did, and did not, generate estoppel. 520 U.S. at 30-34. The Court described the reasons involved in prior estoppel decisions, but it did not limit the applicability of estoppel to that set of reasons. The only general formulation used by the Court (in passing, describing the presumption) was "a substantial reason related to patentability." 520 U.S. at 33. And the Court noted its reluctance to declare estoppel applicable in circumstances "if" – as the Court cautiously stated – the PTO may have been acting on the assumption that estoppel did not apply to curtail assertion of equivalent. in such

circumstances. *Id.* at 32.

The Federal Circuit in this case properly concluded that estoppel applies to a scope-narrowing amendment made to satisfy any requirement for issuance of the patent. That ruling is, first of all, fully consistent with *Warner-Jenkinson*. There is no reason to think that the Court's use of the term "patentability" meant to limit the reasons to avoidance of prior art. The Court's opinion obviously takes great pains *not* to state a general standard and *not* to declare avoidance of prior art the standard for estoppel. Indeed, the Court, in stating that addition of a claim element for other reasons does "not *necessarily* preclude infringement by equivalents," indicates that it very well may. 520 U.S. at 30-31 (emphasis added). And even the term "patentability" hardly carries a clear, limited meaning: for example, the comprehensive PTO *Manual of Patent Examining Procedure* ("*MPEP*") includes under its "patentability" heading (chapter 21, entitled "Patentability") all of the following statutory requirements for issuance of a patent: utility, novelty and nonobviousness in light of prior art, adequate written description, enablement, disclosure of best mode, conformity of claim to what applicant regards as its invention, and particularity and distinctness of claims.

The Solicitor General, representing the PTO, agrees with the Federal Circuit that attempting to meet any of the requirements for issuance of a patent supplies an estoppel-generating reason. SG/PTO Br. 13-17. That agreement implicitly answers the question that underlay this Court's guarded observation that it was reluctant to apply estoppel "if" the PTO had in some circumstances been relying on the inapplicability of estoppel, and consequent availability of equivalents, in demanding and accepting some amendments. As noted above, the definitive *MPEP* identifies no circumstance (outside the statutory means-plus-function context which is directed to literal and not equivalents

coverage) where the PTO makes its decisions in reliance on any continuing availability of equivalents.[19] And, as quoted below, both Judge Lourie and Judge Gajarsa of the Federal Circuit (two former patent practitioners) have clearly explained that there is no such reliance. *See* pages 44-45, *infra*.

The Federal Circuit's holding makes eminent sense. Avoidance of prior art forms just a part of the set of conditions laid down by Congress for issuing a patent, and the "patentability" of a particular claimed invention is not and cannot be judged independently of the application that contains the definition of the zone of exclusivity sought and the public disclosures that serve as the *quid pro quo* for the exclusivity (or monopoly) grant. All of the statutory requirements are part of the bargain: exclusivity in return for an advance in knowledge that is sufficiently disclosed to be effectively put in the public domain and well enough defined to prevent deterrence of further innovation from uncertainty about the patent-controlled territory.[20] When a patent applicant, in the PTO, bypasses further argument before the examiner and any appeal rights and decides with focused attention to amend its claims so as substantively to narrow the scope of claimed territory, it is defining the terms of the patent bargain, no matter which of the statutory requirements underlie the narrowing amendment. The particular requirement at issue does not alter the policy behind

---

[19]The Solicitor General (SG/PTO Br. 17 n.1) simply notes this Court's reference in *Warner-Jenkinson* to possible PTO reliance, but refrains from asserting (without any reflection in the *MPEP*) that there has in fact been such reliance.

[20]*See Bonito Boats, Inc. v. Thunder Craft Boats, Inc.*, 489 U.S. 141, 146-52 (1989); *Universal Oil Prods. Co. v. Globe Oil & Refining Co.*, 322 U.S. 471, 484 (1944); *United Carbon Co. v. Binney & Smith Co.*, 317 U.S. 228, 236 (1942); *General Elec. Co. v. Wabash Appliance Corp.*, 304 U.S. 364, 369 (1938).

prosecution history estoppel: the entitlement of the public to rely on, and fairness of holding the applicant to, those claim limitations adopted (bypassing further argument before the examiner and any appeals) with pointed focus on what was minimally necessary to secure issuance of the patent.

Finally, a practical reason supports the Federal Circuit's refusal to limit estoppel-generating reasons to avoidance of prior art. As Federal Circuit decisions reflect, there would be an obvious potential for applicants to try to manipulate the PTO record if, even for amendments that in fact substantively narrowed the claims, some statutory grounds generated estoppel and others did not. For example, if "definiteness" under Section 112, ¶ 2, did not generate estoppel (even for a narrowing amendment), an applicant could try to re-characterize an amendment in response to some prior art as really just "clarifying" but not narrowing – as Festo tries here (Festo Br. 28), despite the plain fact that the amendments at issue did not relate to any issue of lack of clarity raised in the PTO.[21] *See Loral Fairchild Corp. v. Sony Corp.*, 181 F.3d 1313, 1326 (Fed. Cir. 1999) (noting applicant's attempts in the PTO to discuss a prior art rejection "under the rubric of a clarification" to escape estoppel); *BAI v. L & L Wings*, 160 F.3d 1350, 1355 (Fed. Cir. 1998).[22] A simple standard of

---

[21]The examiner's Section 112 rejections related to other matters entirely. *See* note 7, *supra*.

[22]Litton's *amicus* brief (at 5) illustrates this manipulation: Litton describes its amendment as having been "made to 'more particularly point out' its invention, 35 U.S.C. § 112," though it is settled in the *Litton* case that the amendment was made *not* to satisfy the Section 112, ¶ 2 particularity/definiteness requirement but to satisfy the separate requirement of the same paragraph that the claim conform to what the applicant "regards as his invention" (§ 112, ¶ 2), which was directly related to prior art in *Litton*, 140 F.3d at 1461. *See MPEP* § 2171 (§ 112, ¶ 2 has "two separate requirements"); *id.* §§ 2172-2173.

substantive narrowing avoids this problem.

II. The Applicable Estoppel Bars Equivalents Coverage of the Accused Nonliterally Infringing Devices

The Federal Circuit, defining the scope of the estoppel effected by the claim-narrowing amendments, held that it barred an assertion of equivalents for the limitations added by the estoppel-generating amendments. That "complete bar" rule thus estopped Festo from asserting that SMC's single-sealing ring arrangement and nonmagnetizable sleeve were the equivalent of the dual-sealing-ring and magetizable-sleeve elements of Festo's Stoll and Carroll patents. The Federal Circuit's holding is directly supported by this Court's governing precedents. The ruling reflects a proper determination, by the court with unique experience in the area, that the "flexible" approach representing one strand of its conflicting case law was inescapably uncertain, defeating the public's need for greater clarity of patent boundaries. And no claim of reasonable reliance or other policy assertion undermines the Federal Circuit's law-clarifying decision. On this issue, which is a matter of judge-made law that can only be resolved through the familiar process of doctrinal refinement based on experience, the resolution by the Federal Circuit, specially entrusted with the responsibility of deciding infringement cases year in and year out, should be affirmed.

A. This Court's Governing Precedents, *Exhibit Supply* and *Warner-Jenkinson*, Directly Support the Federal Circuit's Holding That Equivalents Coverage Is Barred

Festo, in the entire section of its brief concerning the scope of estoppel, *i.e.*, *what* coverage the applicant surrenders when making an amendment (Festo Br. 32-38), does not even cite, let alone discuss, this Court's most important precedent on the issue, the 1942 *Exhibit Supply* decision. That decision was the last full discussion of prosecution history estoppel before

Warner-Jenkinson, and it was the final and definitive pronouncement on the subject, culminating a long line of stringent decisions applying estoppel to limit equivalents infringement, before Congress's recodification of the patent laws in the 1952 Act.[23] As such, it is due the same adherence as this Court in *Warner-Jenkinson* gave the last pre-1952 doctrine of equivalents decision, *Graver Tank & Mfg. Co. v. Linde Air Products Co.*, 336 U.S. 271 (1949), which did not involve any estoppel question.

Exhibit Supply not only re-stated the general principle limiting the doctrine of equivalents where "a restrictive amendment" (there, to avoid prior art) has been made: "it has long been settled that recourse may not be had to that doctrine to recapture claims which the patentee has surrendered by amendment." 315 U.S. at 136. What it added to prior estoppel decisions was a clear rule defining *what* a patent applicant surrenders when it makes a scope-narrowing amendment. The patent concerned pin-ball machines (or tables), with their many small vertical posts that make light or sound (by completing an electrical circuit) upon being hit by a ball. The original application covered conductors (the electrical connections for the posts) "carried by the table," but that claim was rejected, and the claim was narrowed to conductors "embedded in the table." This Court held that the applicant, by its choice of narrowing amending language, automatically was abandoning any subject matter that was within the claim before amendment but outside the claim after amendment.

---

[23] *E.g.*, *Schriber-Schroth Co. v. Cleveland Trust* Co., 311 U.S. 211, 220-22 (1940); *Smith v. Magic City Kennel Club*, 282 U.S. 784, 790 (1931); *I.T.S. Rubber Co. v. Essex Rubber Co.*, 272 U.S. 429 (1926); *Weber Elec. Co. v. E.H. Freeman Elec. Co.*, 256 U.S. 668, 677-78 (1921); *Shepard v. Carrigan*, 116 U.S. 593, 598 (1886); *Goodyear Dental Vulcanite Co. v. Davis*, 102 U.S. 222, 228 (1880).

> By striking that phrase ["carried by the table"] from the claim and substituting for it "embedded in the table" the applicant restricted his claim to those combinations in which the conductor means, though carried on the table, is also embedded in it. By the amendment he recognized and emphasized the difference between the two phrases *and proclaimed his abandonment of all that is embraced in that difference*. [citations omitted] The difference which he thus disclaimed must be regarded as material, and *since the amendment operates as a disclaimer of that difference* it must be strictly construed against him. [citations omitted]

315 U.S. at 136-37.

The plain import of *Exhibit Supply* was recognized even by Litton in its *amicus* brief before the Federal Circuit. *See* note 11, *supra* (quoting Litton's straightforward reading of *Exhibit Supply*). The Solicitor General similarly recognizes: "the Court has stated that, when a patent applicant submits a narrowing amendment to avoid prior art, the applicant by necessary implication disclaims the range of equivalents that falls between the original and the amended claims." SG/PTO Br. 24 (citing *Exhibit Supply*); *see also* U.S. Petition for Certiorari in *United States v. Hughes Aircraft*, No. 98-571, at 19 ("[a]s the Court explained [in *Exhibit Supply*], when a patent applicant amends his claim to avoid prior art, the applicant *necessarily* 'proclaim[s] his abandonment of all that is embraced in that difference.'") (emphasis added). This Court's decision in *Exhibit Supply* thus states a clear rule defining – for the patentee, for the public – *what* is surrendered by a narrowing amendment, a rule that for the present case and (at least) most cases is identical to the "complete bar" rule of the Federal Circuit.

This Court in *Warner-Jenkinson* clearly understood the *Exhibit Supply* rule. In adopting a presumption that an amendment was made for a reason generating estoppel, placing the burden on the patentee to show otherwise, the Court stated with clarity the result that follows where the patentee has not overcome the presumption, leaving in place the conclusion that estoppel applies to the amendment-added element: "prosecution history estoppel would *bar* the application of the doctrine of equivalents as to that element." 520 U.S. at 33 (emphasis added); *see also id.* ("prosecution history estoppel as a bar to application of the doctrine of equivalents to the element added by that amendment"). That conclusion, by logic and the structure of this Court's opinion, straightforwardly applies whether the amendment generates estoppel because the reason is known or merely presumed to be an estoppel-generating one. And given that it is nothing more than a simple restatement of what *Exhibit Supply* had already established, it must be understood as confirming *Exhibit Supply* rather than disregarded by attributing inadvertence to the Court. *See Litton*, 145 F.3d at 1476-78 (Gajarsa, J., dissenting from denial of rehearing); *id.* at 1473 (Clevenger, J., dissenting from denial of rehearing).[24]

Festo not only blinds itself to the rulings of *Exhibit Supply* and *Warner-Jenkinson*. It makes no demonstration that other decisions of this Court are to the contrary. Indeed, with *Exhibit Supply* as the last pre-1952, pre-*Warner-Jenkinson* decision on estoppel, it would supersede earlier decisions even if there were an inconsistency, a common pattern in the evolution of judge-made law. But, in fact, the *Exhibit Supply* rule did not have to

[24]The Court's statement that a court should consider "the manner in which the amendment addressed and avoided the objection" (520 U.S. at 33 n.7) simply refers to the need to determine whether the amendment was made for a reason related to patentability.

repudiate prior decisions; it had only to follow the familiar course – like the Court's adoption of a presumption of estoppel or its articulation of the element-by-element equivalence rule in *Warner-Jenkinson* – of formulating a law-clarifying rule consistent with the results of many prior decisions.

Quite simply, no prior decision of this Court is inconsistent with the *Exhibit Supply* rule or its "complete bar" counterpart adopted by the Federal Circuit in this case. The Federal Circuit clearly discussed the decisions of this Court cited by the dissenters below. Pet. App. 14a-18a. Most of the Court's prior decisions *rejected* infringement under the doctrine of equivalents on the basis of estoppel (or other grounds), so their results could not support a "flexible" estoppel rule; and other cases relied on by the dissenters below involved *literal* infringement, because the claims (as was common in the late 19th Century) themselves covered "equivalents" or matter "substantially as described." Neither the dissenters nor Festo has cited precedent of this Court, much less precedent from the modern era of particularized boundary-defining claiming, that upholds nonliteral infringement of an amendment-added claim limitation in contravention of *Exhibit Supply*.

B. The Federal Circuit, Based On Its Unique Experience, Properly Adopted The "Complete Bar" Rule In Preference To The Irretrievably Unpredictable "Flexible" Approach

The Federal Circuit expressly rested its decision in this case on an assessment of familiar policy considerations: the importance to the public, including competitors and other innovators, of notice of patent boundaries (along with PTO primacy in setting those boundaries) versus any patentee interest in coverage beyond the terms it chose to write. While the principles governing the doctrine of equivalents concern claim language in general, the balance in the present context – specifically, the patentee side – must be assessed with respect

to claim language that was adopted during the prosecution in the PTO with specific attention focused on the amended language. The Federal Circuit held that, in this context, the need for public notice overrides any patentee interest in escaping the claim-narrowing terms it chose and would be defeated by a "flexible" approach to judging the scope of estoppel.

In reaching that conclusion, the Federal Circuit relied on a body of experience, which it uniquely possesses, to conclude that a flexible approach introduces ineradicable uncertainty into the determination of what if any equivalents are available for an amendment-added claim limitation, and thus breeds costly and investment-deterring litigation over this important aspect of identifying patent boundaries, as parties cannot predict how particular district judges or particular panels of the Federal Circuit will assess the PTO record. The evaluation of the scope-of-estoppel issue, a matter of judge-made law, inevitably turns on precisely such practical considerations; and the Federal Circuit (even more than the PTO, which does not deal with doctrine of equivalents issues) is unique in its ability to make that evaluation, based on 20 years of experience deciding the scope of estoppel in dozens upon dozens of cases. The Federal Circuit's determination is due great deference and should be upheld. *See Warner-Jenkinson*, 520 U.S. at 40 ("special expertise" of Federal Circuit); Pet. App. 19a, 24a-25a.

1. The Federal Circuit's decision advances a policy interest deeply embedded in the patent laws, as *Warner-Jenkinson* and many prior decisions of this Court have explained. That interest is not, as Festo caricatures it, to "eliminate" uncertainty in the patent system. Festo Br. 41. It is, rather, to *reduce* uncertainty by providing the public – competitors, other innovators – better (not perfect) knowledge of where it may stand amidst what may be a forest of patents in an area of technology and commerce, as well as in protecting

the primacy of the PTO process for defining the zones that are off limits without permission from the patentee. *See Warner-Jenkinson*, 520 U.S. at 33-34; *Markman v. Westview Instruments, Inc.*, 517 U.S. 370, 390 (1996). The Federal Circuit adopted the "complete bar" rule to define what an applicant surrenders by amendment to provide the increased notice.[25]

Businesses making decisions about where to devote research-and-development dollars or what products they may labor to perfect or introduce into the market are significantly hampered by uncertainty about where various patentees' rights stop. Some uncertainty is inherent in the doctrine of equivalents, but prosecution history estoppel has long been a vital check on that uncertainty, reflecting the substantially weaker interest of patentees in leeway as to claim boundaries for those claim limitations that they crafted by amendment in the PTO and to which they therefore had to give specific focused attention. The certainty-enhancing role of prosecution history estoppel requires a clear rule for determining *what* is surrendered after determining that estoppel applies to a particular amendment. A patent lawyer advising a business provides little useful guidance if all he can advise is that an estoppel-generating amendment "may have a limiting effect" on available equivalents "within a spectrum ranging from great

---

[25]In this respect, the rule serves as a default rule with similarities to various clear-statement rules this Court has adopted to require express provision to overcome the default result that otherwise applies: *e.g.*, nonretroactivity (*Landgraf v. USI Film Prods.*, 511 U.S. 244 (1994)); absence of implied repeal (*United States v. Borden Co.*, 308 U.S. 188 (1939)); elimination of judicial review in certain contexts (*INS v. St. Cyr*, 121 S. Ct. 2271 (2001); waivers of sovereign immunity (*United States v. Nordic Village, Inc.*, 503 U.S. 30 (1992)). A patentee, to avoid the effect of limiting coverage to the terms of particular claim language, must draft expressly broader claim language.

to small to zero." *Hughes*, 717 F.2d at 1363.

The Federal Circuit rejected just that "flexible" approach, and adopted the complete bar rule, after express acknowledgement and consideration of the patentee's competing interest in "some benefit of the doubt as to what was disclaimed." Pet. App. 27a. That asserted benefit, the court noted, "comes at the public's expense." *Id.* The expense, it explained, is to interests the patent law values highly.

Thus, the Federal Circuit explained that "the flexible bar approach 'poses a direct obstacle to the realization of important objectives.'" Pet. App. 26a.

> These objectives include giving effect, when prosecution history estoppel arises, to a narrowing amendment's operation as a disclaimer of subject matter, *see, e.g., Exhibit Supply*, 315 U.S. at 136-37, preserving the notice function of patent claims, *see, e.g., Warner-Jenkinson*, 520 U.S. at 29, and promoting certainty in patent law, *see, e.g., Markman*, 517 U.S. at 390. *The realization of these objectives cannot help but be frustrated by the uncertainty inherent in the flexible bar approach.*

Pet. App. 26a (emphasis added). That uncertainty is reflected in the common pattern of litigation over the issue: The patentee draws the line at the prior art ("a wide range of equivalents"), the accused infringer draws the line close to the literal terms of the claims ("little or no range of equivalents"), and where the line ultimately will be drawn by a court is "virtually impossible to predict." Pet. App. 25a. That problem produces a result the Federal Circuit is uniquely qualified to diagnose: "it is virtually impossible to predict before the decision on appeal where the line of surrender is drawn." Pet. App. 24a-25a. And that result, the court concluded, renders the "flexible" approach not "workable" as that term must be understood in patent law:

> "[R]ules qualify as 'workable' when they can be relied upon to produce consistent results and give rise to a body of law that provides guidance to the marketplace on how to conduct its affairs." Pet. App. 25a.

The complete bar rule solves this otherwise-unavoidable problem.

> If prosecution history estoppel acts as a complete bar to application of the doctrine of equivalents, *both the patentee and the public are on notice as to the scope of protection provided by a claim element narrowed for a reason related to patentability.* The patentee and the public can look to the prosecution history, a public record, to determine if any prosecution history estoppel arises as to any claim element. If so, that element's scope of protection is clearly defined by its literal terms.

Pet. App. 27a (emphasis added). And that clarity helps to promote innovation.

> Thus, under the complete bar approach, technological advances that would have lain in the unknown, undefined zone around the literal terms of a narrowed claim under the flexible bar approach will not go wasted and undeveloped due to fear of litigation. *The public will be free to improve on the patented technology and design around it without being inhibited by the threat of a lawsuit* because the changes could possibly fall within this scope of equivalents left after a claim element has been narrowed by amendment for a reason related to patentability. *This certainty will stimulate investment in improvements and design-arounds because the risk of infringement will be easier to determine.* In general, the difficulty in counseling

> the public and the patentee on the scope of protection provided by an amended element is greatly reduced under the complete bar approach due to the certainty and predictability such a bar produces.

Pet. App. 30a (emphasis added). For these reasons, the Federal Circuit concluded that, "[a]lthough a flexible bar affords the patentee more protection under the doctrine of equivalents, we do not believe that the benefit outweighs the costs of uncertainty." Pet. App. 30a.

2. The clear rule adopted by the Federal Circuit in place of the amorphous "flexible" approach not only serves the public's interest in increased certainty as to patent boundaries. It also comports with the well-understood realities of patent practice. *First*, the controlling incentive of patent-prosecuting attorneys to cede as little as possible in securing a patent aligns the complete bar rule with what practitioners actually do. *Second*, from the perspective of the relevant public, the fact that this incentive is well understood by the patent bar makes it reasonable for skilled readers to infer that, when the applicant chose particular terms of limitation, it was carefully choosing the terms that narrowed coverage the least possible amount needed to secure the patent and thus that it was surrendering precisely what it excluded by that narrowing. *Third*, the unpredictability of different judges' application of a "flexible" approach reflects an inherent feature of PTO records: they are commonly so terse and unilluminating, furnishing no reliable basis for discerning the scope of surrender other than the difference between the original claim and narrowed claim.

Fourth, the patentee side of the policy balance at issue simply has not been shown to have substantial weight on its own. Beyond generalities, Festo does not identify any meaningful impediments to writing claim amendments to cede

as little territory as possible. Its example of using "glue" in a claim (Festo Br. 32) is defeated by its own recognition, just a few pages later (*id.* at 36), that the patentee could use "adhesive." Claims may even be stated in negative terms, subject to meeting written-description, definiteness, and the other normal requirements: the patentee may retain a term that the examiner has deemed too broad by itself, while requiring within that broad class something "other than" the particular prior-art feature encompassed within it that made it too broad in unmodified form. *See, e.g.*, *MPEP* § 2173.05(i). Functional terms, moreover, are expressly allowed by the means-plus-function provision of Section 112, ¶ 6. Neither Festo nor its *amici* have identified any concrete examples where a patentee cannot retain appropriate claim coverage by a proper amendment. In these circumstances, if there are claiming impediments, they cannot be significant enough to weigh heavily in the notice-fairness balance that the Federal Circuit considered, and properly struck, in its decision.

3. The Solicitor General largely agrees with the foregoing analysis, including the Federal Circuit's judgment that the flexible approach is unworkable and the fact of patentees' focused attention on particular limitations added by amendment in the PTO, as well as the Court's plain ruling in *Exhibit Supply*. SG/PTO Br. 23-24, 27. The Solicitor General, however, shies away from the Federal Circuit's clear rule, suggesting that surrender of all equivalents for the amendment-added limitation be only a "presumption" and identifying conceptually two exceptions. *Id.* at 25-28. But the suggestion cannot be squared with *Exhibit Supply*. And, whatever the superficial appeal of such exceptions in the abstract, the Solicitor General's approach is neither well-defined nor supported by any concrete examples that actually justify the exceptions; is not grounded in the practical realities of business planning and infringement litigation on which the Federal

Circuit relied; and would defeat the clarity that is the essence of Federal Circuit's rule – relegating the patent world to nothing more than a caution that "courts should exercise discipline" in finding some equivalents still available. SG/PTO Br. 27.

One exception is for situations where "it was not possible for one of ordinary skill in the art to draft a claim amendment that literally encompassed the allegedly equivalent matter." SG/PTO Br. 26. The Solicitor General, however, gives not a single example of any such impossibility, just as Festo has given none, and there is simply no basis for a belief that the tools available for claim drafting are insufficient, including the tool of claiming a "means" for performing a particular "function," which, under Section 112, ¶ 6, provides *literal* protection for equivalents of particular structures identified in the specification (not the claim) as an example of the required means. Moreover, if the Solicitor General means something restrictive by his reference to "ordinary skill in the art," that concept (including what the relevant "art" is and what the level of "ordinary skill" is) commonly is a subject of contentious litigation – by *factfinders* (not the court) – in the context of judging obviousness. *See Graham v. John Deere Co.*, 383 U.S. 1 (1966); *Richardson-Vicks Inc. v. Upjohn Co.*, 122 F.3d 1476, 1479 (Fed. Cir. 1997). Yet the Solicitor General here insists that the estoppel inquiry is a matter of law (SG/PTO Br. 27), as the Federal Circuit has long held (SMC Br. in Opp. 17 n.12), and also rejects the "flexible" approach precisely because it disables a workable efficient resolution of the estoppel inquiry. In addition, the Solicitor General insists that the burden of establishing any exception be on the patentee, yet identifies a procedure that flips the burden: the patentee is required to assert a negative ("no alternative claim language was available"), then the *accused infringer* must come forward with language to disprove the assertion. This exception,

unsupported by any concretely shown need, is riddled with difficulties.

The Solicitor General's other exception is similarly deficient: "if the court finds that the assertedly equivalent element is itself an innovation that was not known to persons of ordinary skill in the art at the time the applicant amended the claim." SG/PTO Br. 25. The rationale is that matter that "did not exist and was not reasonably within the contemplation of the PTO and the applicant at the time of the claim amendment" is not reasonably thought to be disclaimed. SG/PTO Br. 25-26. The problems with this exception, however, are not only conceptual but, perhaps more important, practical.

Conceptually, the suggested exception relies on an unwarranted asymmetry between what a patentee claims and what a patentee *dis*claims. A patentee has long been entitled to coverage of (*i.e.*, exclusivity rights over) post-patent innovations by others if they fall within the language adopted in the claims – and, indeed, as *Warner-Jenkinson* held, even if they are mere equivalents (judged at the later time of alleged infringement) of what is claimed. 520 U.S. at 37. There is no reason why the disclaimer effected by a narrowing amendment should not equally reach post-patent innovations, whether or not (actually or constructively) within the contemplation of the art at the time of patenting.

The suggested exception, in any event, raises a host of definitional issues and is rife with opportunities for litigation.[26] Does the Solicitor General intend an inquiry into what the PTO and the applicant were actually aware of, or is the inquiry more objective, involving what they reasonably *could* know? If the

---

[26]Some of these issues have been the subject of extensive litigation in Litton's case, in which a petition for certiorari is pending (No. 00-1617). *See Litton, supra.*

PTO record were the basis for decision, how could the record be a reliable indication of what was known, given the obvious incentive, under such an approach, to include as little as possible in the record? If "ordinary skill in the art" is part of the standard, how does he propose to avoid the contentious litigation (over what are elsewhere treated as *factual* issues) that the concept provokes? When the Solicitor General speaks of matter that "does not exist," how does that relate to his standard referring to what is "known" – given that it is fundamental that description in publications puts matter in the public domain even if no one ever builds a prototype, let alone before any commercial availability? If the patent relates to one "art," but it uses as a component a device from another "art," is an existing or publicly disclosed equivalent of that component inside or outside the exception? If, as will be common, the alleged infringer has taken prior art and made *some* modifications to produce its accused device (*i.e.*, accused as an equivalent of what may be just one element of a multi-element claim), how (and by whom) is the decision to be made whether the particular accused device is an "innovation that was not known"? More generally, what are the standards for "innovation," "exist," "known," etc.?

The Solicitor General's proposed exception obviously presents patentees with a field day for costly litigation over the scope of its estoppel effected by claim-narrowing amendment. It is a recipe for trials within trials, benefiting only the lawyers. Even worse, however the issues might be narrowed once joined in litigation, businesses have little way of guessing in advance what the answers will turn out to be. The exception thus re-introduces the very uncertainties that, the Solicitor General agrees, justifiably led the Federal Circuit to repudiate the

"flexible" approach to judging the scope of estoppel.[27] And, as with the Solicitor General's other exception, there simply is no concrete showing of any real-world "need" for the suggested exception, let alone so substantial a need as to justify the destruction of the clarity benefits of the Federal Circuit's rule.[28] Indeed, stretching to allow the *patentee* to assert coverage of what is *someone else*'s later innovation carries real costs to the patent law's encouragement of ever-continuing innovation by competitors.[29]

---

[27]The uncertainties must be assessed from the full perspective of both prospective patent holders and prospective accused infringers, as businesses in the real world may be either or both. Those who, like some universities and research groups, are only patent holders, and not makers or sellers readily subject to infringement suits, have a distinctly limited perspective. Of course, even from the perspective of those deciding where to invest money for research, there is great value in heightened clarity in determining whether existing patents will cover the fruits of any such research.

[28]Even Judge Rader's example (Pet. App. 111a), a mere hypothetical, presents no obviously compelling case for limiting the scope of the estoppel – assuming, what is hardly clear itself, that "anode" and "cathode" would not actually be *construed* literally to cover any electron attractor and electron emitter, respectively. A pre-transistor-era patentee whose invention depended only on the functions of emitting or attracting electrons should, and easily could, have written its claims accordingly. If the inventor had in mind only some additional particular aspect of "anodes" and "cathodes," an amendment to use those terms *is* fairly limited to their literal scope.

[29]Neither of the exceptions suggested by the Solicitor General would be applicable here. The elements at issue (non-magnetizable sleeve, sealing ring) were in the prior art. None is "an innovation that was not known ... at the time the applicant amended the claim" and, certainly, a claim could have been drafted "that literally encompassed the allegedly equivalent element."

C. The Federal Circuit's Experience-Based Judgment Is Not Defeated By Any Reasonable Reliance Interest Or Other Overriding Policy Objection

1. No sound claim of reasonable reliance stands as an obstacle to the Federal Circuit's application of its unique experience to adopt a clear rule on the scope of amendment-based estoppel to serve patent law's vital public-notice policy. This kind of objection cannot be accepted to override otherwise-sound doctrinal rulings except on the strongest proof of reasonable reliance: the Federal Circuit cannot properly be faced with a one-way ratchet in resolving patent-law issues always in favor of more protection. In any event, there are two decisive flaws in any such objection here. Any reliance would be legally unreasonable – for reasons so clear as to make the assertion of actual reliance itself implausible. Moreover, there is no substantial basis in patent-prosecution practice for an assertion of actual reliance in the first place.

Thus, any reliance on some remaining equivalents for amendment-added claim limitations would have been unreasonable in light of the ever-looming authority of *Exhibit Supply* stating a clear rule, plainly inconsistent with a "flexible" approach, defining the scope of estoppel in terms that, at least as a practical matter, are the same as the "complete bar" rule now clearly articulated by the Federal Circuit. Similarly, even if a patent applicant looked to Federal Circuit cases on the issue, it would have found a plain division of approach. That division is laid out in the Federal Circuit opinion (Pet. App. 19a-24a) and has for a long time been well-recognized by commentators.[30] Any reliance on one branch of the divided

---

[30]5A D. Chisum, *Patents* § 18.05[3][b], at 18-492 (1998); Strawbridge et al., Area Summary, *Patent Law Developments in the United States Court of Appeals for the Federal Circuit During 1986*, 36 Am. U.L.Rev. 861, 887-88 (1987); Smith, *The Federal Circuit's Modern Doctrine of*

authority would have been unreasonable.

Indeed, the only reliance that could matter is some reliance on available equivalents coverage that was the key to a successful infringement case (on a valid patent), and *that* reliance would not be reasonable even if a patentee were looking only at the cases purporting to apply a "flexible" approach. The simple fact is that, as SMC's brief in opposition demonstrates, out of all the 52 cases cited by Judge Michel for the "flexible" approach, only a handful – themselves of very recent vintage – involved a successful infringement claim that seems actually to depend on the absence of the complete bar rule. SMC Br. in Opp. 25-29. (The small number and recent vintage of such cases, along with the interlocutory character of cases like the 1983 *Hughes* decision, provides a ready explanation of why the Federal Circuit's nominally "flexible" approach could survive for so long without *en banc* review or review by this Court in light of *Exhibit Supply*.) There is no reason to set out that analysis in full here, as it stands wholly unanswered by Festo. The unavoidable lesson is that no patentee could reasonably have counted on equivalents coverage for amendment-added claim limitations even by disregarding *Exhibit Supply* and the well-recognized division of Federal Circuit authority and looking only at what could reasonably be expected under the "flexible" approach.

These facts about the state of estoppel law not only make any reliance unreasonable, but make any reliance by patent attorneys reading the cases unlikely in fact to have occurred. Basic facts about patent litigation and patent-prosecution

---

Equivalents in Patent Infringement, 29 Santa Clara L. Rev. 901, 921 (1989); Note, *To Bar or Not to Bar: Prosecution History Estoppel After Warner-Jenkinson*, 111 Harv. L. Rev. 2330, 2336 (1998); Otterstedt, *Unwrapping File Wrapper Estoppel in the Federal Circuit: A New Economic Policy Approach*, 67 St. John's L. Rev. 405 (1993)

practice also undermine any assertion that patent applicants actually were placing reliance on remaining available equivalents for amendment-adopted claim limitations. The essential fact about litigation is that the governing standard for "equivalents" coverage is so uncertain of application ("insubstantial" differences, based on a battle of experts and lawyers) that a patent applicant could not look ahead to the prospect of a successful equivalents infringement assertion with anything remotely approaching confidence.[31] For many years, indeed, the Federal Circuit treated "the doctrine of equivalents [as] the exception, however, not the rule" (*London v. Carson Pirie Scott & Co.*, 946 F.2d 1534, 1536 (Fed. Cir. 1991)), and Judge Lourie explained in the present case that, even today, "the overwhelming majority of equivalence claims ultimately fail" after lengthy and costly litigation (Pet. App. 68a).

The essential facts about patent prosecution are that neither a patent attorney nor the PTO, in practice, acts in reliance on some remaining scope of equivalents for claim language added by amendment. As Judge Lourie (a former patent practitioner) explained: "Surely, when prosecuting a patent, patent practitioners have no settled expectations of being able to assert

---

[31] *See Caterpillar, Inc. v. Deere & Co.*, 224 F.3d 1374, 1381 (Fed. Cir. 2000) (Plager, J., concurring in reversal of noninfringement summary judgment) ("I join the opinion and concur in the conclusion that this case must be returned for trial, but I do so without enthusiasm. If the trial judge sat as the trier of fact, I would find his assessment of the facts unimpeachable. But he does not. Instead, under the rules as we now have them, and because the patentee's lawyer did a good job of building a record of arguably disputable facts, the matter (unless settled) will now go to a jury before whom there will be a lengthy and costly contest of the experts. The jury will then pick a winner; it may be the judge's winner, or it may not. In either event, the case provides a textbook example of the insubstantial nature of the 'insubstantial differences' test, and its marginally legitimate child, 'substantially the same way to achieve substantially the same result,' on which the outcome will turn. May the best lawyer win.").

the doctrine of equivalents." Pet. App. 66a. A leading treatise similarly explains that "it would be most unwise and indeed foolish for an applicant for patent knowingly to accept a claim of lesser breadth than that to which he is entitled with mental reservation based on an intention to rely upon the doctrine of equivalents." 2 P. Rosenberg, *Patent Law Fundamentals* at 14-6 (2d ed. June 2000). Judge Lourie further explained: "Additionally, the PTO does not make 'basic assumptions' relating to a range of equivalents to be allowed. . . . The PTO examines claims in light of the disclosure of the patent application and against the prior art. . . . *It does not issue patents with any expectations regarding equivalents.*" Pet. App. 67a (emphasis added). In a similar vein, Judge Gajarsa (also a former patent practitioner, and in fact a former examiner) had earlier explained:

> *In deciding whether to allow a patent application to issue, an examiner does not consider the doctrine of equivalents.* The United States Patent and Trademark Office (PTO) requires its examiners to determine only whether a patent application meets the statutory requirements of Title 35 of the United States Code as well as various internal regulations. As a judicially-created doctrine, the doctrine of equivalents is not found anywhere in either Title 35 of the United States Code or in the Code of Federal Regulations governing PTO practice. *As such, an examiner is in no way required or directed to consider the application of the doctrine of equivalents in determining whether to allow a particular patent application.*

Litton, 145 F.3d at 1476 n.1 (Gajarsa, J., dissenting from denial of rehearing) (emphasis added).

2. If no claim of reasonable reliance defeats the Federal

Circuit's resolution of the scope-of-estoppel issue, no other policy objection does so either. For one thing, the Federal Circuit's rule does not destroy the doctrine of equivalents – which continues to apply to all claim elements not added by a narrowing amendment. Equivalents cases with no amendment-based estoppel impediment (wholly apart from the complete bar rule) are commonplace.[32] Festo has not even attempted to show otherwise.

Equally important, it is demonstrably wrong to suggest that the real-world value of patents depends on the availability of equivalents infringement. That suggestion is simply inconsistent with the experience of patent practitioners. It is inconsistent, too, with the fact, noted by Judge Lourie, that "the overwhelming majority of equivalence claims ultimately fail."

---

[32]*See, e.g., Laitram Corp. v. Cambridge Wire Cloth Co.*, 863 F.2d 855 (Fed. Cir. 1988); *Corning Glass Works v. Sumitomo Electric U.S.A.*, 868 F.2d 1251 (Fed. Cir. 1989); *Sun Studs, Inc. v. ATA Equip. Leasing, Inc.*, 872 F.2d 978 (Fed. Cir. 1989); *Insta-Foam Prods., Inc. v. Universal Foam Systems, Inc.*, 906 F.2d 698 (Fed. Cir. 1990); *Uniroyal, Inc. v. Rudkin-Wiley Corp.*, 939 F.2d 1540 (Fed. Cir. 1991); *Read Corp. v. Portec, Inc.*, 970 F.2d 816 (Fed. Cir. 1992); *Goodwall Constr. Co. v. Beers Constr. Co.*, 991 F.2d 751 (Fed. Cir. 1993); *Miles Labs., Inc. v. Shandon Inc.*, 997 F.2d 870 (Fed. Cir. 1993); *Lifescan, Inc. v. Home Diagnostics, Inc.*, 76 F.3d 358 (Fed. Cir. 1996); *Zygo Corp. v. Wyko Corp.*, 79 F.3d 1563 (Fed. Cir. 1996); *Fonar Corp. v. General Elec. Co.*, 107 F.3d 1543 (Fed. Cir. 1997); *Cybor Corp. v. FAS Technologies, Inc.*, 138 F.3d 1448 (Fed. Cir. 1998); *YBM Magnex, Inc. v. ITC*, 145 F.3d 1317 (Fed. Cir. 1998); *Comark Communications, Inc. v. Harris Corp.*, 156 F.3d 1182 (Fed. Cir. 1998); *Overhead Door Corp. v. Chamberlain Group, Inc.*, 194 F.3d 1261 (Fed. Cir. 1999); *Kraft Foods, Inc. v. ITC*, 203 F.3d 1362 (Fed. Cir. 2000); *Optical Disc Corp. v. Del Mar Avionics*, 208 F.3d 1324 (Fed. Cir. 2000); *Fiskars, Inc. v. Hunt Mfg. Co.*, 221 F.3d 1318 (Fed. Cir. 2000); *Viskase Corp. v. American Nat'l Can Co.*, 261 F.3d 1316 (Fed. Cir. 2001); *Turbocare, supra.* Of course, there are many more cases *rejecting* equivalents claims on their merits, apart from any amendment-based estoppel.

Pet. App. 68a. And it is inconsistent with the following empirical review – which shows that, whatever may have been the case in 1950, today at least it is just not true that cases of literal infringement are "'very rare.'" Festo Br. 20 (quoting *Graver Tank*, 339 U.S. at 607). An examination of one year's worth of Federal Circuit cases (with calendar year 2000 dates) that reached the merits of infringement assertion (including in several instances the likely merits, in preliminary-injunction cases) shows that literal infringement is very far from rare. Of the 31 that did not reject infringement altogether, fully 27 either upheld or left open for remand liability for literal infringement, with only 4 cases leaving nothing but equivalents liability.[33]

---

[33]A Westlaw search for "infringe! & da(2000)" in the CTAF database turned up 176 documents, including a number of trademark and other nonpatent cases. The decisions seemingly upholding or allowing literal infringement are the following: *Vanguard Prods. Corp. v. Parker Hannifin Corp.*, 234 F.3d 1370; *Stryker Corp. v. Davol Inc.*, 234 F.3d 1252; *Ruiz v. A.B. Choice Co.*, 234 F.3d 654; *Doyle v. Crain Indus., Inc.*, 243 F.3d 564; *Zi Corp. v. Tegic Communications, Inc.*, 243 F.3d 564; *Lampi Corp. v. American Power Prods., Inc.*, 228 F.3d 1365; *Southwest Software, Inc. v. Harlequin Inc.*, 226 F.3d 1280; *Heidelberg Harris, Inc. v. Mitsubishi Heavy Industries, Ltd.*, 243 F.3d 560; *Caterpillar Inc. v. Deere & Co.*, 224 F.3d 1374; *Dow Chemical Co. v. United States*, 226 F.3d 1334; *Iscar Ltd. v. Sandvik AB*, 243 F.3d 558; *Messagephone, Inc. v. SVI Systems, Inc.*, 243 F.3d 556; *Hilgraeve Corp. v. McAfee Associates, Inc.*, 224 F.3d 1349; *Tate Access Floors, Inc. v. Maxcess Technologies, Inc.*, 222 F.3d 958; *Indian Creek Mesquite, Inc. v. W.W. Wood, Inc.*, 250 F.3d 763; *General Surgical Innovations, Inc. v. Origin Medsystems, Inc.*, 250 F.3d 761; *C.R. Bard, Inc. v. Medtronic, Inc.*, 250 F.3d 760; *Embrex, Inc. v. Service Eng'g Corp.*, 216 F.3d 1343; *Magnivision, Inc. v. Bonneau Co.*, 250 F.3d 758; *Northern Telecom Ltd. v. Samsung Electronics Co.*, 215 F.3d 1281; *Advanced Display Systems, Inc. v. Kent State University*, 212 F.3d 1272; *Envirco Corp. v. Clestra Cleanroom, Inc.*, 209 F.3d 1360; *Optical Disc Corp. v. Del Mar Avionics*, 208 F.3d 1324; *IMS Technology, Inc. v. Haas Automation, Inc.*, 206 F.3d 1422; *Clearstream Wastewater Systems, Inc. v. Hydro-Action, Inc.*, 206 F.3d 1440; *Rivera-Davila v. Asset Conservation, Inc.*, 230 F.3d 1378; *Ajinomoto Co. v. Archer-Daniels-Midland Co.*, 228 F.3d 1338.

That review would have to be extraordinarily inaccurate, or the sample extraordinarily unrepresentative, for any claim of rarity to be even close to true.

There is also no substantial cause for objection based on the supposition that applicants "could be rendered reluctant to amend claims" by virtue of the Federal Circuit's newly clarified rule. *See* SG/PTO Br. 21. This observation cannot sensibly mean that an applicant will abandon an application rather than amend it after a rejection; it must mean that an applicant is more likely to appeal inside the PTO than previously. But that result (with causation traced to the Federal Circuit rule) is hardly clear. Without proof that substantial numbers of patent applicants relied on equivalents availability, there is no reason to suppose that such a change will occur. And, even on an assumption of some such reliance, there is an obvious offsetting effect: such applicants would do more up-front refinement of their claims *before* filing – thereby reducing the occasions for PTO rejections in the first place. Anyway, if more scope-defining decisions are being made inside the expert PTO, rather than awaiting future litigation after guesswork as to boundaries by the public, that is not a negative consequence at all.[34]

CONCLUSION

The judgment of the court of appeals should be affirmed.

The equivalents-only cases are: *Vermeer Mfg. Co. v. Charles Machine Works, Inc.*, 251 F.3d 168; *Fiskars, Inc. v. Hunt Mfg. Co.*, 221 F.3d 1318; *Ta Instruments, Inc. v. Perkin-Elmer Corp.*, 250 F.3d 756; *Kraft Foods, Inc. v. International Trading Co.*, 203 F.3d 1362.

[34] *See Sage Products Inc. v. Devon Industries Inc.*, 126 F.3d 1420, 1425 (Fed. Cir. 1997) (per Rader, J.) ("as between the patentee who had a clear opportunity to negotiate broader claims but did not do so, and the public at large, it is the patentee who must bear the cost of its failure to seek protection for this foreseeable alteration of its claimed structure").

Respectfully submitted,

ARTHUR I. NEUSTADT
Counsel of Record
CHARLES L. GHOLZ
ROBERT T. POUS
OBLON, SPIVAK, McCLELLAND
MAIER & NEUSTADT, P.C.
1755 Jefferson Davis Highway
Arlington, Virginia 22202
(703) 413-3000

JAMES B. LAMPERT
HALE AND DORR
60 State Street
Boston, Massachusetts 02109
(617) 526-6000

Counsel for Respondents

Supreme Court, U.S.
FILED
NOV 30 2001
OFFICE OF THE CLERK

(45)

No. 00-1543

In the Supreme Court of the United States

OCTOBER TERM, 2000

FESTO CORPORATION,

Petitioner,

v.

SHOKETSU KINOZOKU KOGYO KABUSHIKI CO., LTD., A/K/A SMC CORPORATION AND SMC PNEUMATICS, INC.,

Respondents.

On Writ of Certiorari to the United States Court of Appeals for the Federal Circuit

REPLY BRIEF FOR PETITIONER

ANDREW L. FREY
DONALD M. FALK
ROBERT L. BRONSTON
Mayer, Brown & Platt
1909 K Street, N.W.
Washington, D.C. 20006
(202) 263-3000

ROBERT H. BORK
Counsel of Record
Suite 1000
1150 17th Street, N.W.
Washington, D.C. 20036
(202) 862-5851

CHARLES R. HOFFMANN
GERALD T. BODNER
GLENN T. HENNEBERGER
ANTHONY E. BENNETT
Hoffmann & Baron, LLP
6900 Jericho Turnpike
Syosset, New York 11791
(516) 822-3550

Counsel for Petitioner

NOVEMBER 30, 2001

22 pp

TABLE OF CONTENTS

Page

TABLE OF AUTHORITIES ii

I. PROSECUTION HISTORY ESTOPPEL DOES NOT AUTOMATICALLY RESULT FROM EVERY CLAIM NARROWING AMENDMENT MADE TO COMPLY WITH ANY PROVISION OF THE PATENT ACT 3

II. PROSECUTION HISTORY ESTOPPEL, WHEN IT ARISES, DOES NOT AUTOMATICALLY BAR EVERY APPLICATION OF THE DOCTRINE OF EQUIVALENTS 11

III. THE GOVERNMENT INCORRECTLY SEEKS TO APPLY ESTOPPEL TO ALL "NARROWING" AMENDMENTS BUT CORRECTLY CONCLUDES THAT THE DOCTRINE OF EQUIVALENTS REMAINS AVAILABLE AS TO NON-NARROWED ASPECTS OF THE CLAIM 14

IV. THE AMENDMENTS TO THE STOLL AND CARROLL PATENTS WERE NOT MADE TO AVOID ANY PRIOR ART 16

CONCLUSION 18

TABLE OF AUTHORITIES

Page(s)

Cases:

Davis v. *Wakelee*, 156 U.S. 680 (1895) 1

Exhibit Supply Co. v. *Ace Patents Corp.*, 315 U.S. 126 (1942) 6, 7, 8, 12

Fay v. *Cordesman*, 109 U.S. 408 (1883) 12

Goodyear Dental Vulcanite Co. v. *Davis*, 102 U.S. 222 (1880) 12

Graham v. *John Deere Co.*, 383 U.S. 1 (1966) 4, 8, 15

Hubbel v. *United States*, 179 U.S. 77 (1900) 8

Hurlbut v. *Schillinger*, 130 U.S. 456 (1889) 12

Insta-Foam Prods., Inc. v. *Universal Foam Sys., Inc.*, 906 F.2d 698 (Fed. Cir. 1990) 14, 15

International Harvester Co. v. *Kentucky*, 234 U.S. 216 (1914) 13

Shephard v. *Carrigan*, 116 U.S. 593 (1886) 12

Smith v. *Magic City Kennel Club, Inc.*, 282 U.S. 784 (1931) 8

Warner-Jenkinson v. *Hilton Davis Chem. Co.*, 520 U.S. 17 (1997) ..... *passim*

Weber Elec. Co. v. *Freeman Elec. Co.*, 256 U.S. 668 (1921) 8

Statutes:

35 U.S.C. § 101 ..... 4, 5, 9, 15

35 U.S.C. § 102 ..... 4, 5, 9, 15

TABLE OF AUTHORITIES — Continued

Page(s)

35 U.S.C. § 103 ..... 4, 5, 9, 15

35 U.S.C. § 111 ..... 4, 5, 16

35 U.S.C. § 112 ..... 4, 5, 16

Miscellaneous:

5A Donald S. Chisum, *Chisum on Patents* § 18.02[4] (1998) 7

PTO Manual of Patent Examining Procedure 8

REPLY BRIEF FOR PETITIONER

Respondent SMC urges the Court virtually to abolish the doctrine of equivalents which has for a century and a half played an essential role in the American patent system. Without that doctrine, the copying of inventions would be rife and the incentives to make true innovative advances would be very significantly diminished. SMC and the en banc majority would, nevertheless, relegate the doctrine to the status of an historical curiosity. It would be of no use to any inventor whose initial drafting of a patent application fell short of perfection, as defined by a patent examiner.

Following the lead of the en banc majority below, SMC would accomplish its end by completely transforming the concept of estoppel. Throughout the law, estoppel arises when a party makes a representation to gain a benefit and then attempts to contradict that representation to gain a different benefit or when a party attempts to re-litigate an issue already adjudicated against him. *Davis* v. *Wakelee*, 156 U.S. 680, 689 (1895). In the patent context, prosecution history estoppel prevents a patentee from deliberately relinquishing subject matter by amending his application in order to obtain a patent and later invoking the doctrine of equivalents to reclaim the surrendered subject matter.

SMC pays no attention whatever to these time-honored fundamentals of estoppel doctrine, proposing instead to jettison them in favor of a blanket rule that leaves wholly out of account whether the reason for an amendment was to achieve patentability by disclaiming potentially unpatentable subject matter. Under SMC's view, and the holding below, *any* "narrowing" amendment, whatever its purpose, destroys the availability of the doctrine of equivalents so long as the amendment is, as virtually all are, loosely associated with a desire to enhance the prospects for issuance of a patent. *It does not matter, as far as SMC and the Federal Circuit are*

concerned, whether the subsequent invocation of the doctrine of equivalents is in any way inconsistent with the proffering of the amendment. To call this an "estoppel" is an insult to generations of lawyers and judges. So too is any suggestion that SMC's test is relevant to the fair and efficient administration of the patent law; it is instead a trap for any applicant whose initial effort lacks ideal clarity in the eyes of the examiner who happens to be assigned the file.

SMC disguises the radical change in patent law it advocates by sliding back and forth between the concept of "patentability" and the concept of any "requirement" for obtaining a patent. The two are not the same. "Patentability" addresses the *substantive* worthiness of an invention for patent protection. The other "requirements" address the *form* in which an application must be cast, *e.g.*, concision and clarity of expression. An amendment to improve form has nothing to do with whether the invention's substance is new, useful, and not obvious, the requirements for patentability. The distinction is made clear by the Patent Act and the decisions of this Court. This Court should rule unequivocally that it is only when an intentional surrender of subject matter is made for the purpose of securing issuance of the patent that prosecution history estoppel can arise and then only with respect to the surrendered subject matter and equivalents thereto.

SMC, again following the en banc majority, recommends collapsing form and substance on the theory that it will lend certainty to the law. But it will not do even that. In addition to the other manifold defects of the proposed rule, it will merely shift the area of uncertainty, and hence of litigation, from the reason for a particular amendment to the question of whether the amendment is "narrowing." Given the difficulties of fitting language to innovative concepts, particularly in rapidly evolving areas of technology, the issue of narrowing will often

be more complex than the question of the reason for an amendment.

The decisions of this Court, culminating in *Warner-Jenkinson*, are entirely contrary to the positions SMC now urges. Neither SMC nor the en banc majority below provides any sound reason for overruling those decisions now.[1]

I.

PROSECUTION HISTORY ESTOPPEL DOES NOT AUTOMATICALLY RESULT FROM EVERY CLAIM NARROWING AMENDMENT MADE TO COMPLY WITH ANY PROVISION OF THE PATENT ACT

The crux of this issue — when prosecution history estoppel arises — is the clear distinction between "patentability" and the "statutory requirements" for a patent. The Federal Circuit en banc majority, SMC, and the government as amicus use the two concepts as if they were freely interchangeable. They are not. Both the Patent Act and this Court's opinions demonstrate that "patentability" is a term that does not embrace all of the "requirements" that an applicant must satisfy to get a patent. That fact alone undermines the entire foundation of the Federal Circuit decision. The en banc majority held that every claim narrowing amendment designed to comply with any requirement of the Patent Act — including those not related to prior art — automatically creates prosecution history estoppel. Both law and common sense require rejection of that extraordinary proposition.

---

[1] SMC attempts to color this case by suggesting, in an almost offhand manner, that the amendments made to Festo's patents were made to avoid prior art. If that were true, it would be the main focus of SMC's brief because, under long-settled law, SMC would be entitled to judgment without more. It is not remotely true, as we will demonstrate in Point IV below.

A. As we explained in our opening brief, the Patent Act makes the meaning of "patentability" clear. Sections 101-103 are placed under the chapter heading "Patentability of Inventions." Section 101 requires that the invention be "new and useful." Section 102 expands upon the requirement that the invention be new by denying a patent when its subject matter is to be found in the prior art. Section 103 requires that the invention not be obvious to a person having ordinary skill in the art to which the subject matter relates. By contrast, all other requirements for obtaining a patent are set forth in "Chapter 11 — Application for Patent," which in Section 111 sets forth such requirements as that the application must include a specification and a drawing, and in Section 112 requires that the specification contain a written description of the invention and the manner of making and using it in "such full, clear, concise, and exact terms as to enable any person skilled in the art * * * to make and use the same * * *."

The Act thus clearly distinguishes between patentability and other requirements for obtaining a patent. The case law makes the same distinction.

B. This Court confirmed the understanding derived from a reading of the Patent Act. In *Graham* v. *John Deere Co.*, 383 U.S. 1, 12 (1966), the Court pointed out that the Patent Act "sets out the conditions of patentability in three sections" that state "three explicit conditions: novelty and utility as articulated and defined in § 101 and § 102, and nonobviousness * * * as set out in § 103." Noticeably omitted from this delineation of the conditions of patentability were the requirements for obtaining a patent specified in Sections 111 and 112.

Sections 101, 102, and 103 govern the question whether a device or process is eligible for a patent, stating the substance necessary to make an invention patentable. If the invention is

novel, useful, and not obvious, it is patentable. If the examiner objects on Sections 101-103 grounds, patentability can be achieved, if at all, only by an amendment that satisfies the criteria there set forth, which often requires surrendering subject matter. Sections 111-112, by contrast, govern merely the form in which a patent application must be cast. An examiner's objection concerning requirements of form can be overcome by amending the application for greater clarity. If, for example, the examiner says it is not clear how a person skilled in the art can use a device, a clarifying amendment can satisfy him. It makes no sense whatever to say that achieving greater clarity as to how to use an invention creates an estoppel that bars the doctrine of equivalents.

The distinction between patentability and other requirements — that is between substance and form — means that the reason for an amendment governs the question of whether prosecution history estoppel is created. *Warner-Jenkinson* explicitly states: "[P]etitioner reaches too far in arguing that the reason for an amendment during patent prosecution is irrelevant to any subsequent estoppel." 520 U.S. at 30. Rather, the Court ruled, estoppel may be generated when the amendment was necessary to avoid a concern that "arguably would have *rendered the claimed subject matter unpatentable*." *Id.* at 30-31 (emphasis added). Contrary to SMC and the majority below, therefore, the reason for an amendment is determinative, and estoppel arises only when the amendment surrenders subject matter. It does not arise — indeed, does not make any sense — with respect to amendments designed to meet such requirements as concision or clarity of expression in the application or the submission of a drawing of the invention or, as in this case, the substitution of more appropriate terminology for references to "linear motors." Amendments that merely clarify or otherwise improve the description of the invention usually do not surrender any subject matter. While

clarifying amendments may add new elements, and therefore narrow the literal scope of the claim, it does not follow that a patentee has surrendered all equivalents with respect to the amended language. *Warner-Jenkinson*, 520 U.S. at 19. A surrender of claim scope does not equal a surrender of equivalents.

This reading of *Warner-Jenkinson* is confirmed by the Court's creation of a rebuttable presumption of subject matter surrender when the reason for an amendment is unclear. SMC argues, however, that it is inconsistent with *Warner-Jenkinson*'s "pointed emphasis" "on the need for public notice of patent boundaries, which would be undermined were patentees free to supplement the public record with new explanations not discernable by the public." Resp. Br. 23. But that is precisely what *Warner-Jenkinson* contemplated by establishing a presumption that unexplained amendments relate to patentability but allowing the patentee to rebut that presumption. If, as SMC would have it, *all* amendments relate to "patentability," there would be no possibility of rebuttal. In allowing the presumption to be rebutted, moreover, the Court necessarily intended recourse to material not of record, and hence often not discernable by the public. If the rebuttal material were confined to that already in the public record, there would be no doubt about the reason for the amendment and hence no office for any presumption, rebuttable or not. The centrality to the estoppel issue of the reason for an amendment is thus confirmed by the Court's creation of the rebuttable presumption. It follows that there can be no flat rule that any "narrowing amendment" generates estoppel willy-nilly.

It is curious that SMC relies so heavily upon *Exhibit Supply Co.* v. *Ace Patents Corp.*, 315 U.S. 126 (1942), for that case, far from supporting SMC's position, decisively rejects it. Contrary to SMC's contention, *Exhibit Supply* did not shrink the doctrine of equivalents by adopting a rigid and absolute bar to

equivalents for amended claim elements. "Rather the message of *Exhibit Supply* is that a court should not construe a narrow claim of a patent so as to render it equivalent in scope to a broader claim surrendered during the course of Patent Office proceedings on the application for a patent." 5A Donald S. Chisum, *Chisum on Patents* § 18.02[4] at 18-34 (1998).

In *Exhibit Supply*, the patent holder sought to recapture through the doctrine of equivalents a claim that had been surrendered by amendments to overcome the examiner's rejections of the original claim because of the prior art. The patent covered electrical conductors used in games such as pinball. The original claim referred to conductors "carried on the table." To avoid the prior art, the claim was amended to cover that subset of conductors which, though carried on the table, were also embedded in the table. The Court understandably rebuffed the patentee's suit for infringement by equivalents against conductors carried on the table but not embedded in it. This was a classic case of estoppel and the loss of equivalents coverage because an amendment deliberately surrendered an area of coverage to avoid prior art.

SMC's assertion that *Warner-Jenkinson* supports its reading of *Exhibit Supply* is equally specious. *Warner-Jenkinson* cited the case only to illustrate the fact that this Court has invoked estoppel when the reason for an amendment was to avoid prior art.

SMC gains nothing by relying on *Exhibit Supply*'s statement (315 U.S. at 136) that "[b]y the amendment, he [the patentee] recognized and emphasized the difference between the two phrases and proclaimed his abandonment of all that is embraced in that difference." That says only that prosecution history estoppel arises when the patent applicant deliberately surrenders an area of coverage in order to obtain the patent.

That is black letter law and it is not in the least inconsistent with Festo's position.[2]

SMC's novel reading of *Exhibit Supply* would mean that from 1942 to 1997, a period of 55 years, the lower courts and the Federal Circuit have been disobeying the law laid down by this Court by resolving questions about estoppel and equivalents on the basis of the reason for amendments to patent claims rather than applying an absolute bar to equivalents for a claim narrowed for any reason. It must be accounted odd, to say the least, that in that time no petitioner called this Court's attention to what would have been manifest disregard of the Court's precedent.[3]

C. SMC's only policy argument is that certainty would be achieved by adopting the en banc majority's allegedly

---

[2] Moreover, each of the six cases cited by *Exhibit Supply* to support that statement stands only for the proposition that a claim amended to define over prior art cannot be restored to its original scope through the doctrine of equivalents. See, *e.g.*, *Smith* v. *Magic City Kennel Club, Inc.*, 282 U.S. 784, 790 (1931) ("The patentee is thereafter estopped to claim the benefit of his rejected claim or such a construction of his amended claim as would be equivalent thereto."); *Hubbel* v. *United States*, 179 U.S. 77, 80 (1900) ("While not allowed to revive a rejected claim, by a broad construction of the claim allowed, yet the patentee is entitled to a fair construction of the terms of his claim as actually granted."); *Weber Elec. Co.* v. *Freeman Elec. Co.*, 256 U.S. 668, 677-678 (1921) ("Having thus narrowed his claim against rotary movement in order to obtain a patent, the patentee may not by construction, or by resort to the doctrine of equivalents, give to the claim the larger scope which it might have had without the amendments, which amount to a disclaimer of rotation as an operative feature of his device.").

[3] SMC would subordinate the clear meaning of the Patent Act and the precedents of this Court to the PTO *Manual of Patent Examining Procedure*. Resp. Br. 24. Its reliance is wholly unwarranted. The *Manual* (which could not, in any event, override the meaning ascribed by the Patent Act, *Graham*, and *Warner-Jenkinson*) uses the term "patentability" loosely because it was not addressing the scope of estoppel. SMC's effort to elevate the *Manual* to a controlling statement of the law is frivolous.

"objective" rule that any "narrowing" amendment as to any requirement for the issuance of a patent generates estoppel regardless of the reason for the amendment or the subject matter to which it relates. The asserted gain in certainty would be illusory, however, for the test proposed is not objective.[4]

Our opening brief pointed out (at 39-40) that the new rule would put the inventor and his attorney to the choice between refusing to amend any aspect of the application to satisfy the examiner and engaging in an (often fruitless) appeal; filing an artificially narrowed claim to avoid amendments (thus also cutting back the legitimate scope of the doctrine of equivalents); or eschewing the patent system altogether and relying upon trade secret law.

In addition to these harms to the system, a massive injustice would be done to the holders of more than a million patents who had freely amended under the current law, confident that the doctrine of equivalents was available unless the amendment surrendered substance, *i.e.*, matter related to novelty, utility, and nonobviousness as set out in Sections 101-103, and then only to that extent. Those patents, under the government's position as well as SMC's, would now be rendered virtually worthless by the proposed change in the law. It is wholly unrealistic to contend, as the government does, that holders of existing patents "are properly charged with knowledge that narrowing amendments would give rise to prosecution history estoppel." Govt. Br. 21. That the prior law was to the contrary is demonstrated by the intense interest the *Festo* decision has

---

[4] The Federal Circuit's new rules, which force patent applicants to avoid making amendments, do nothing to establish clarity in claiming. A patent practitioner who is attempting to guide a client in designing around a patent encounters the most difficulty when a patent has issued without amendment and thus has a "clean" prosecution history. In such cases, there is no record of claim interpretation or identification of prior art that assists in delimiting claim boundaries.

generated. The patent bar, industry, and research institutions recognized the revolutionary nature of the en banc majority's decision. It is simply wrong, indeed absurd, to say that holders of existing patents issued years ago should have anticipated *Festo* and adjusted their practice before the PTO accordingly.

Those are reasons aplenty to reject the new rule, but it is also clear that the rule lacks the counterbalancing virtue claimed for it, for it is in fact infected with ambiguity that will foment litigation over the issue of whether a particular amendment is or is not "scope-narrowing." That concept necessarily requires the construction of language and, for that reason, cannot be "objective." Judge Linn pointed out (Pet. App. 117a) that the en banc majority did not clearly articulate what it considers to be a "narrowing" amendment:

> If the change is merely the substitution of one synonymous word for another or the mere clarification of language from a foreign translation, the claim drafter may intend no change whatsoever in claim scope; but the drafter's word choice may be construed after grant of the patent to imply a different scope * * *.

In the present case, the examiner objected to the claim because he was not sure whether the device was a motor or clutch. Had the applicant's lawyer said, "It's a motor," that could be regarded as a narrowing amendment or argument creating an estoppel which, under the Federal Circuit's rule, would bar the doctrine of equivalents altogether, even though a clarification and not a surrender of subject matter was intended. Competitors could then copy the motor with insubstantial changes and destroy the value of the patents. At the very least, the parties would have to litigate the question of

whether narrowing had occurred. That would often be an unedifying debate over semantics.[5]

II.

PROSECUTION HISTORY ESTOPPEL, WHEN IT ARISES, DOES NOT AUTOMATICALLY BAR EVERY APPLICATION OF THE DOCTRINE OF EQUIVALENTS

It is one of the mysteries of SMC's argument that it seeks to support the proposition that any estoppel precludes any application of the doctrine of equivalents with statements from this Court's decisions that contradict the proposition advanced. Thus, SMC summarizes *Exhibit Supply*: "This Court held that the applicant, by its choice of narrowing amending language, automatically was abandoning any subject matter that was within the claim before amendment but outside the claim after amendment." Resp. Br. 28. That is undoubtedly correct. But the necessary implication is that the estoppel thereby created is limited to the subject matter abandoned by the amendment. As shown by our example of an amendment that narrows a claim of joinder of two members by any means to one of joinder by glue, the resulting estoppel properly prevents the use of the doctrine of equivalents to a joinder of members by a screw but

---

[5] Contrary to SMC and the Federal Circuit, the law prior to *Festo* was workable and the doctrine of equivalents was properly bounded. The uncertainties of patent litigation are no more or less than those in other fields of law. A skilled patent attorney can review and interpret a file history of a patent to give guidance whether a particular product will fall within the literal scope of the claims. If the product or process falls outside of the claims, the attorney must determine if the product would be deemed an equivalent of the patented invention, *i.e.*, whether the product functions in a substantially similar way to achieve substantially the same result. If so, the role of estoppel must be assessed by reviewing the file history and prior art. While this analysis does not provide absolute certainty, advice in many fields of law rarely does.

not to joinders accomplished by the equivalent of glue, *e.g.*, a joinder by paste. Pet. Br. 32-33. This is not in the least contrary to *Exhibit Supply*, even as SMC has formulated its rule.

However one might argue the breadth of the surrender in the hypothetical, the principle is clear and, as Festo has shown, is supported by cases such as *Hurlbut* v. *Schillinger*, 130 U.S. 456 (1889); *Fay* v. *Cordesman*, 109 U.S. 408 (1883); *Goodyear Dental Vulcanite Co.* v. *Davis*, 102 U.S. 222, 223-227 (1880); and *Shephard* v. *Carrigan*, 116 U.S. 593, 598 (1886). Pet. Br. 33-34. In more recent years, the Court has taken very few patent cases and has not had to deal with this well-established principle — until *Warner-Jenkinson*. The Court there remanded for a determination whether the amendment to a claim for a dye purification process, which included a limitation to processes operating above a pH of 6.0, should bar application of the doctrine of equivalents to processes operating below that strength. Had the Court intended a complete bar approach, no such remand would have been needed; equivalence could not be found below pH 6.0. Thus, the remand clearly contemplated consideration under a flexible bar approach. Similarly, in Festo's case, it would be both unjust and contrary to well-established law to hold that the mere fact of an amendment, though it did not surrender the subject area as to which the doctrine of equivalents was invoked, both created an estoppel and barred any and all use of the doctrine of equivalents.

In contrast to the "complete bar" espoused by SMC and imposed by the Federal Circuit, a "flexible bar" allows some protection against equivalents, depending on the scope of the surrender of subject matter, which in turn defines the scope of the estoppel. SMC and the en banc majority reject the flexible bar, which had governed most cases in the past, as "unworkable." But neither SMC nor the court offers a

comprehensible reason why the flexible bar is unworkable. The decision whether an allegedly infringing device falls within or without the scope of an estoppel typically involves comparing the structure of the accused device to the structure of other devices, such as those in the prior art, that reveal the scope of the subject matter relinquished by the amendment. In other words, the task involves reasoning by analogy, which is the universal mode of legal reasoning. The standard SMC endorses would make virtually all law on any subject equally "unworkable."

As we have earlier noted (Pet. Cert. Reply Br. 5 n.3), under the criteria propounded by SMC and the Federal Circuit, such questions as negligence, attempts to monopolize, and defamation are "virtually unascertainable." If the cure administered below and defended here were given equal rein in other fields, these and many other areas of the law would be governed by *per se* rules. Any driver who ran into another car would be negligent, regardless of the circumstances; any firm that reached a specified market share would be guilty of attempted monopolization, no matter how that size was achieved; and any critical remark would be actionable defamation, regardless of truth. To say that applying a flexible bar is unworkable in patent law and must be replaced with a complete bar is as preposterous as imposing equivalent *per se* rules would be in these other fields of law.[6]

---

[6] Explaining a prior decision upholding the Sherman Act, Justice Holmes wrote that the case went "no further than to recognize that, as with negligence, between the two extremes of the obviously illegal and the plainly lawful there is a gradual approach and that the complexity of life makes it impossible to draw a line in advance without an artificial simplification that would be unjust." *International Harvester Co.* v. *Kentucky*, 234 U.S. 216, 223 (1914).

III.

THE GOVERNMENT INCORRECTLY SEEKS TO APPLY ESTOPPEL TO ALL "NARROWING" AMENDMENTS BUT CORRECTLY CONCLUDES THAT THE DOCTRINE OF EQUIVALENTS REMAINS AVAILABLE AS TO NON-NARROWED ASPECTS OF THE CLAIM

The government, which in the past has been on both sides of the issue, now supports the finding of estoppel arising from any narrowing amendment related to patentability, as expansively defined by SMC and the en banc majority below. The government's conclusion is incorrect for the same reasons that SMC is wrong, as shown in points I. and II., above, but it is worth noting the government's vacillations on the subject.

The government's brief as amicus curiae in *Warner-Jenkinson* adopted the position that Festo takes here. There the government states, "[A]s the court correctly noted in *Insta-Foam Products, Inc.* v. *Universal Foam Systems, Inc.*, 906 F.2d 698, 703 (Fed. Cir. 1990), '[W]henever prosecution history estoppel is invoked as a limitation to infringement under the doctrine of equivalents, a close examination must be made as to, not only what was surrendered, but also the reason for such a surrender.'" 1996 WL 172221, at *22-*23 (U.S. Apr. 11, 1996).

The government reiterated the point (*id.* at *22): "Amendments before the PTO to reflect the scope of what was enabled or to add specificity raise considerations different from those raised by amendments to avoid prior art. The purpose of the enablement requirement is not to limit the scope of the patent right, but to ensure that the invention has been fully disclosed so that, upon the patent's expiration, the public can practice the invention."

In the light of these statements, it is startling that the government should now tell this Court that "[t]he holders of the 'numerous patents which have not yet expired,' [*Warner-Jenkinson* at 32 n.6] — most of which contained amended claims — are properly charged with knowledge that narrowing amendments would give rise to prosecution history estoppel." Govt. Br. 21. If that knowledge escaped the government in 1996, how can holders of existing patents be deemed to know what the government then denied? More particularly, how can Festo, whose patents issued in 1982 and 1988, be deprived of its property for relying on the law as the Federal Circuit understood it in *Insta-Foam* (1990), as the government understood it in its 1996 brief in *Warner-Jenkinson*, and as this Court expressed it in that case?

The government's amicus brief in this case admits that the *Festo* decision by the Federal Circuit changed the law, referring to the Federal Circuit's "pre-*Festo* conception of prosecution history estoppel." Govt. Br. 19. Yet the government states that the en banc majority in this case "correctly concluded that 'a narrowing amendment made for any reason related to the statutory requirements for a patent will give rise to prosecution history estoppel with respect to the amended claim element.'" Govt. Br. 13 (quoting Pet. App. 9a). The argument advanced by SMC and the government often claims that the decision below is entirely consistent with *Warner-Jenkinson*, though it is clear from the sentence just quoted that it is effectively a repudiation of *Warner-Jenkinson*. The difference is simply this: *Warner-Jenkinson* held that estoppel arises when an applicant amends his application by surrendering subject matter that might have adversely affected patentability. Patentability means the satisfaction of the three substantive conditions set out in §§ 101-103 of the Patent Act — novelty, utility, and nonobviousness — a proposition confirmed by the Court in *Graham*. The en banc majority below and the government here

frequently refer to patentability but do not define it. Instead, they shift to a narrowing amendment "made for any reason related to the statutory requirements for a patent." That extends the definition of patentability to §§ 111 and 112. The expansion means, for example, that any change in a specification, such as the written description of the patent, may generate an estoppel. Any inquiry into the reason for the change is ruled out.

Were there any doubt that this is the position the Federal Circuit has adopted, that doubt is removed by the fact that it found Festo estopped from using the doctrine of equivalents although the company never surrendered any subject relating to the features of SMC's product claimed to infringe under the doctrine of equivalents.

The en banc majority's new rule, embraced by SMC and urged upon this Court, far from simplifying matters, would create a new and fruitful source of uncertainty and litigation. Injustice is to be done to patent holders, this Court's rulings are to be overridden, and the policy of the Patent Act subverted, all to little, if any, benefit to anyone other than copyists.

IV.

THE AMENDMENTS TO THE STOLL AND CARROLL PATENTS WERE NOT MADE TO AVOID ANY PRIOR ART

The most disingenuous argument advanced by SMC is that both the Stoll and Carroll patents were amended to avoid the prior art and thus created estoppel under the traditional view of prosecution history estoppel. SMC states (Br. 20) that the Federal Circuit's "broader ruling" (*i.e.*, that any "narrowing" amendment triggers estoppel that eliminates the doctrine of equivalents entirely) was "not necessary to the resolution of this case." Were that true, SMC would have been entitled to

summary judgment on the first question presented. But SMC made no such motion in the district court. In fact, when the district judge expressed surprise that SMC had introduced no evidence concerning the prior art, respondent's counsel assured him that "This is not really a prosecution history estoppel case." Pet. App. 198a. At trial, "[n]o objection was raised to the district court's instructions on estoppel, or to the presentation of the broad issue to the jury as part of the evidence relating to infringement." Pet. App. 199a. On appeal, the panel carefully analyzed the prosecution history, and prior art was not found to create estoppel issues. Pet. App. 198a-199a. Upon remand from this Court for consideration of the impact of *Warner-Jenkinson*, a second panel once more did not find that prior art was the reason for any of the amendments. Pet. App. 184a-188a. At the rehearing en banc, however, SMC raised the question and the majority said that the amendments were made in part to avoid the prior art. Pet. App. 52a, 55a. This assertion was grounded in nothing in the record and constitutes fact-finding by an appellate court without authority to engage in such an exercise.

Quite apart from the record in the courts below, SMC's attempt to raise the factual question of prior art in this Court is foreclosed by the Court's grant of certiorari on the two questions presented. Those questions relate solely to what SMC refers to as the Federal Circuit's "broader ruling." In its opposition to the petition for certiorari, SMC argued that the petition should not be granted because the prior art complication made the case a "poor vehicle" for review of the legal questions presented. Festo's reply brief contended that there was no prior art problem. The Court then granted the writ on the two questions presented. This should settle that only the questions presented are before the Court.

Perhaps realizing that its contentions about prior art are at best a red herring, SMC nowhere asks this Court to affirm the judgment below on that basis.

CONCLUSION

For the reasons set forth above, and for the reasons set forth in Festo's opening brief, the decision of the Federal Circuit should be reversed.

Respectfully submitted.

ANDREW L. FREY
DONALD M. FALK
ROBERT L. BRONSTON
Mayer, Brown & Platt
1909 K Street, N.W.
Washington, D.C. 20006
(202) 263-3000

ROBERT H. BORK
Counsel of Record
Suite 1000
1150 17th Street, N.W.
Washington, D.C. 20036
(202) 862-5851

CHARLES R. HOFFMANN
GERALD T. BODNER
GLENN T. HENNEBERGER
ANTHONY E. BENNETT
Hoffmann & Baron, LLP
6900 Jericho Turnpike
Syosset, New York 11791
(516) 822-3550

Counsel for Petitioner

NOVEMBER 30, 2001

AUG 31 2001

SUPREME COURT, U.S.
AUG 31 2001

No. 00-1543

In the Supreme Court of the United States

FESTO CORPORATION, PETITIONER

v.

SHOKETSU KINZOKU KOGYO KABUSHIKI CO., ET AL.

ON WRIT OF CERTIORARI
TO THE UNITED STATES COURT OF APPEALS
FOR THE FEDERAL CIRCUIT

BRIEF FOR THE UNITED STATES AS AMICUS CURIAE SUPPORTING VACATUR AND REMAND

THEODORE B. OLSON
Solicitor General
Counsel of Record

STUART E. SCHIFFER
Acting Assistant Attorney General

LAWRENCE G. WALLACE
Deputy Solicitor General

JEFFREY P. MINEAR
Assistant to the Solicitor General

VITO J. DIPIETRO
ANTHONY J. STEINMEYER
JOHN FARGO
HOWARD S. SCHER
GRACE KARAFFA
Attorneys

Department of Justice
Washington, D.C. 20530-0001
(202) 514-2217

JAMES A. TOUPIN
General Counsel

JOHN M. WHEALAN
Solicitor

LINDA MONCYS ISACSON
CYNTHIA C. LYNCH
MARK NAGUMO
Associate Solicitors
United States Patent and Trademark Office
Arlington, VA 22215

QUESTIONS PRESENTED

The doctrine of equivalents provides that a product or process that does not literally infringe upon the express terms of a patent claim may nevertheless be found to infringe if there is an "equivalence" between the elements of the accused product or process and the claimed elements of the patented invention. *Warner-Jenkinson Co.* v. *Hilton Davis Chem. Co.*, 520 U.S. 17, 21 (1997). That doctrine is limited by the concept of prosecution history estoppel, which recognizes that, if a patent claim is amended during patent prosecution, the amendment may curtail application of the doctrine of equivalents to the amended claim. See *id.* at 30-34. The questions presented in this case are:

1. Whether an amendment of a patent claim that narrows the scope of the claim for any reason related to the statutory requirements for a patent gives rise to prosecution history estoppel with respect to the amended portion of the claim.

2. Whether an amendment of a patent claim that gives rise to prosecution history estoppel completely precludes invocation of the doctrine of equivalents for the amended portion of the claim.

TABLE OF CONTENTS

	Page
Interest of the United States	1
Statement	2
A. The doctrine of equivalents and the concept of prosecution history estoppel	3
B. The relevant facts	5
C. The pertinent proceedings	7
Summary of argument	9
Argument:	
The court of appeals correctly ruled that a patent claim amendment that narrows the scope of a claim gives rise to prosecution history estoppel, but the court erred in holding that prosecution history estoppel completely precludes application of the doctrine of equivalents	11
A. An amendment of a patent claim that narrows the scope of a claim for reasons related to the statutory requirements for a patent gives rise to prosecution history estoppel with respect to the amended portion of the claim	13
B. An amendment of a patent claim that gives rise to prosecution history estoppel presumptively precludes invocation of the doctrine of equivalents for the amended portion of the claim	17
C. The court of appeals' judgment should be vacated and the case should be remanded to the district court for further proceedings	28
Conclusion	30

TABLE OF AUTHORITIES

Cases:	
ACLARA Biosciences, Inc. v. *Caliper Techs. Corp.*, 125 F. Supp. 2d 391 (N.D. Cal. 2000)	25

Cases—Continued: Page

Crawford v. *Heysinger*, 123 U.S. 589 (1887) 14
Cybor Corp. v. *FAS Techs., Inc.*, 138 F.3d 1448 (Fed. Cir. 1998) 15
Exhibit Supply Co. v. *Ace Patents Corp.*, 315 U.S. 126 (1942) 4, 14, 15, 24, 25
Festo Corp. v. *Shoketsu Kinzoku Kogyo Kabushiki Co.*, 187 F.3d 1381 (Fed. Cir. 1999) 2
Goodyear Dental Vulcanite Co. v. *Davis*, 102 U.S. 222 (1880) 22
Graco Children's Prods., Inc. v. *Regalo Int'l, LLC*, No. 97-CV-6885, 2001 WL 392886 (E.D. Pa. Apr. 17, 2001) 16
Graver Tank & Mfg. Co. v. *Linde Air Prods. Co.*, 339 U.S. 605 (1950) 3, 26
Hester Indus., Inc. v. *Stein, Inc.*, 142 F.3d 1472 (Fed. Cir.), cert. denied, 525 U.S. 947 (1998) 17
Honeywell Int'l Inc. v. *Hamilton Sundstrand Corp.*, No. Civ. A 99-309 GMS, 2001 WL 66348 (D. Del. Jan. 8, 2001) 16
Hughes Aircraft Co. v. *United States*:
717 F.2d 1351 (Fed. Cir. 1983) 18
140 F.3d 1470, reh'g denied over dissents, 148 F.3d 1384 (Fed. Cir. 1998), cert. denied, 525 U.S. 1177 (1999) 19
Hurlbut v. *Schillinger*, 130 U.S. 456 (1889) 22
Keystone Driller Co. v. *Northwest Eng'g Corp.*, 294 U.S. 42 (1935) 14
Kinzenbaw v. *Deere & Co.*, 741 F.2d 383 (Fed. Cir. 1984), cert. denied, 470 U.S. 1004 (1985) 18
Leggett v. *Avery*, 101 U.S. 256 (1880) 17
Litton Sys., Inc. v. *Honeywell Inc.*, 238 F.3d 1376 (Fed. Cir.), petition for cert. pending, No. 00-1617 (filed Apr. 23, 2001) 16
Lockheed Martin Corp. v. *Space Sys./Loral, Inc.*, 249 F.3d 1314 (Fed. Cir. 2001) 16

Cases—Continued: Page

Markman v. *Westview Instruments, Inc.*, 517 U.S. 370 (1996) 27
McClain v. *Ortmayer*, 141 U.S. 419 (1891) 23
Merrill v. *Yeomans*, 94 U.S. 568 (1877) 23
Pickholtz v. *Rainbow Techs., Inc.*, 125 F. Supp. 2d 1156 (N.D. Cal. 2000) 16
Royal Typewriter Co. v. *Remington Rand, Inc.*, 168 F.2d 691 (2d Cir.), cert. denied, 335 U.S. 825 (1948) 26
Schriber-Schroth Co. v. *Cleveland Trust Co.*, 311 U.S. 211 (1940) 4
Seattle Box Co. v. *Industrial Crating & Packing, Inc.*, 731 F.2d 818 (Fed. Cir. 1984) 17
Shoketsu Kinzoku Kogyo Kabushiki Co. v. *Festo Corp.*:
520 U.S. 1111 (1997) 2
187 F.3d 1381 (Fed. Cir. 1999) 2
Smith v. *Magic City Kennel Club, Inc.*, 282 U.S. 784 (1931) 14
SRAM Corp. v. *AD-II Eng'g, Inc.*, No. 00 C 6675, 2001 WL 817857 (N.D. Ill. July 9, 2001) 16
TM Patents, LLP v. *IBM Corp.*, 136 F. Supp. 2d 209 (S.D.N.Y. 2001) 16
Turbocare Div. v. *General Elec. Co.*, No. 00-1349 (Fed. Cir. Aug. 29, 2001) 15-16
United States v. *Hughes Aircraft Co.*, 525 U.S. 1177 (1999) 19
Vitronics Corp. v. *Conceptronic, Inc.*, 90 F.3d 1576 (Fed. Cir. 1996) 23
Warner-Jenkinson Co. v. *Hilton Davis Chem. Co.*, 520 U.S. 17 (1997) ..... *passim*
Zletz, In re, 893 F.2d 319 (Fed. Cir. 1989) 21

Constitution and statutes:

	Page
U.S. Const. Art. I, § 8, Cl. 8 (Patent Clause)	1
35 U.S.C. 112	6, 11, 23
35 U.S.C. 131 (1994 & Supp. V 1999)	1
35 U.S.C. 252 (1994 & Supp. V 1999)	17

Miscellaneous:

Donald Chisum, *The Scope Of Protection For Patents After The Supreme Cour'ts Warner-Jenkinson Decision: The Fair Protection-Certainty Conundrum*, 14 Santa Clara Computer & High Tech. L.J. 1 (1998) 13

In the Supreme Court of the United States

No. 00-1543

FESTO CORPORATION, PETITIONER

v.

SHOKETSU KINZOKU KOGYO KABUSHIKI CO., ET AL.

ON WRIT OF CERTIORARI TO THE UNITED STATES COURT OF APPEALS FOR THE FEDERAL CIRCUIT

BRIEF FOR THE UNITED STATES AS AMICUS CURIAE SUPPORTING VACATUR AND REMAND

INTEREST OF THE UNITED STATES

Pursuant to the Patent Clause of the Constitution, U.S. Const. Art. I, § 8, Cl. 8, Congress has charged the United States Patent and Trademark Office (PTO), an agency of the Department of Commerce, with responsibility for examining all patent applications to ensure that they satisfy the statutory conditions for patentability. See 35 U.S.C. 131 (1994 & Supp. V 1999). In addition, the United States is regularly engaged in litigation over the validity and scope of patents, as a patent holder and as a defendant in infringement actions. The United States accordingly has a strong interest, embracing a number of perspectives, in a stable, predictable, and efficient patent system. The United States has a particular interest in ensuring that

the doctrine of equivalents and the related concept of prosecution history estoppel provide both a fair scope of patent protection and sufficient certainty of a patent's limits to protect legitimate expectations while promoting competition and innovation.

STATEMENT

Petitioner Festo Corporation commenced a civil action in the United States District Court for the District of Massachusetts alleging that respondents had infringed two United States patents that Festo owns. Festo asserted, among other theories, infringement under the doctrine of equivalents. See Pet. App. 3a. The district court concluded that respondents had infringed the patents, *id.* at 208a-209a, and the United States Court of Appeals for the Federal Circuit affirmed the district court's judgment, *id.* at 190a-207a. This Court vacated the court of appeals' judgment and remanded the case for further consideration in light of its decision in *Warner-Jenkinson Co.* v. *Hilton Davis Chemical Co.*, 520 U.S. 17 (1997). See *Shoketsu Kinzoku Kogyo Kabushiki Co.* v. *Festo Corp.*, 520 U.S. 1111 (1997).

On remand, the court of appeals affirmed the district court's judgment in part and vacated and remanded in part. Pet. App. 156a-189a. The court of appeals then granted a petition for rehearing en banc before 12 judges of that court on five specific issues relating to the doctrine of equivalents and the concept of prosecution history estoppel. *Festo Corp.* v. *Shoketsu Kinzoku Kogyo Kabushiki Co.*, 187 F.3d 1381 (Fed. Cir. 1999). Based on its resolution of those issues, the en banc court reversed the district court's judgment of infringement. Pet. App. 1a-56a. Six of the court of appeals judges wrote separately. See *id.* at 56a-64a (Plager, J., concurring); *id.* at 64a-69a (Lourie, J., concurring); *id.* at 69a-111a (Michel, J., concurring in part and dissenting in part); *id.* at 111a-113a (Rader, J., concurring in part and dissenting in part); *id.* at 113a-131a (Linn, J., concurring in part and dissenting in part); *id.* at 131a-155a (Newman, J., concurring in part and dissenting in part).

A. The Doctrine Of Equivalents And The Concept Of Prosecution History Estoppel

This Court's decision in *Warner-Jenkinson* sets out the central principles that govern the doctrine of equivalents. "Under this doctrine, a product or process that does not literally infringe upon the express terms of a patent claim may nonetheless be found to infringe if there is 'equivalence' between the elements of the accused product or process and the claimed elements of the patented invention." 520 U.S. at 21. "What constitutes equivalency must be determined against the context of the patent, the prior art, and the particular circumstances of the case." *Id.* at 24 (quoting also *Graver Tank & Mfg. Co.* v. *Linde Air Prods. Co.*, 339 U.S. 605, 609 (1950)).

The Court expressed concern in *Warner-Jenkinson* that the doctrine of equivalents, as it had come to be applied before that decision, had "taken on a life of its own, unbounded by the patent claims." 520 U.S. at 28-29. The Court observed that unbridled application of the doctrine conflicts with "the definitional and public-notice functions of the statutory claiming requirement." *Id.* at 29. It responded to that conflict by making clear that "[e]ach element contained in a patent claim is deemed material to defining the scope of the patented invention, and thus the doctrine of equivalents must be applied to individual elements of the claim, not to the

invention as a whole." *Ibid.* Furthermore, the Court emphasized that "[i]t is important to ensure that the application of the doctrine, even as to an individual element, is not allowed such broad play as to effectively eliminate that element in its entirety." *Ibid.*

The Court additionally recognized that the doctrine of equivalents is constrained by "a well-established limit on nonliteral infringement, known variously as 'prosecution history estoppel' and 'file wrapper estoppel.'" *Warner-Jenkinson*, 520 U.S. at 30. That concept rests on the understanding that, if a patent applicant narrows the scope of patent protection by claim amendments or other actions during the proceedings before the PTO to obtain a patent, the patent holder should not be allowed to argue, in a subsequent infringement action, that the disclaimed subject matter is equivalent to that which the applicant had actually claimed in its narrowing amendment. See *id.* at 30-34; *Schriber-Schroth Co.* v. *Cleveland Trust Co.*, 311 U.S. 211, 220-221 (1940).

The Court noted that prosecution history estoppel most frequently comes into play when the applicant, in order to overcome a PTO patent examiner's rejections based on references to the prior art, narrows a portion of the applicant's original claim and thereby effectively disavows that the subject matter excluded by the narrower claim is equivalent to that claim. See 520 U.S. at 31 & n.5 (citing *Exhibit Supply Co.* v. *Ace Patents Corp.*, 315 U.S. 126 (1942), and other examples). But not every amendment gives rise to prosecution history estoppel. "Where the reason for the change was not related to avoiding the prior art, the change may introduce a new element, but it does not necessarily preclude infringement by equivalents of that element." *Id.* at 33. The Court "place[d] the burden on the patent

holder to establish the reason for an amendment required during patent prosecution." *Ibid.* Where the patent holder fails to establish an explanation, a district court "should presume that the patent applicant had a substantial reason related to patentability for including the limiting element added by amendment" and "prosecution history estoppel would bar the application of the doctrine of equivalents as to that element." *Ibid.*

B. The Relevant Facts

Festo owns the Stoll and Carroll patents, which disclose magnetic rodless cylinder assemblies. The claimed devices employ a piston on the inside of a cylinder, which moves in response to fluid under pressure, and a sleeve on the outside of the cylinder, which is magnetically coupled to the piston. Pet. App. 33a. The magnetic attraction between the sleeve and the piston causes the sleeve to follow the piston as it moves along the inside of the cylinder, thus enabling the sleeve to transport articles on a conveying system. See *ibid.*

Claim 1 of the Stoll patent and Claim 9 of the Carroll patent describe the relevant features of the devices. See Pet. App. 31a-39a. Each of those claims discloses, among other elements, a pair of sealing rings on the piston, having a lip on only one side, which contain fluid flow and exclude impurities. *Id.* at 34a-35a, 37a. In addition, Claim 1 of the Stoll patent discloses a sleeve made of a magnetizable material. *Id.* at 34a. Respondents' accused devices differ in two respects. Those devices employ a single two-way sealing ring, having a lip on both sides, which seals against fluid flow on both sides of the ring. *Id.* at 38a. In addition, the outer portion of the sleeve in respondents' accused devices is made of an aluminum alloy, a material that is not magnetizable. *Id.* at 38a-39a.

Claim 1 of the Stoll patent was amended during prosecution. Claim 1 originally recited "[a] linear motor for use in a conveying system" that included "a piston which is slidable in said tubular part and which has sealing means at each end," and a piston and drive assembly "each carrying a drive magnet arrangement in the form of a hollow cylindrical assembly." Pet. App. 39a. The patent examiner rejected that claim, as well as the other claims contained in the Stoll application, under 35 U.S.C. 112, because the "exact method of operation is unclear." Pet. App. 40a. The applicant amended its claims, reciting, among other things, the sealing ring structure and a sleeve of magnetizable material. *Ibid.* The applicant also stated, in accompanying remarks, that the sealing ring structure made the amended claims distinguishable from prior art references that the patent examiner had identified as possibly pertinent. *Id.* at 40a-41a. The patent examiner allowed the amended claims. *Id.* at 41a.

Claim 9 of the Carroll patent was also amended during patent prosecution, during a reexamination proceeding. Claim 1 of the original Carroll patent did not recite sealing rings, but disclosed them in the written description portion of the specification. Pet. App. 42a. The applicant thereafter submitted the patent for reexamination in light of a German prior art reference that disclosed a similar device having several of the claimed features, including a pair of sealing rings. *Ibid.* During the reexamination proceeding, the applicant canceled Claim 1 and added Claim 9, which explicitly recited a sealing ring structure that, according to the applicant, was distinguishable from the prior art. *Id.* at 42a-43a. The patent examiner allowed the amended claim. *Id.* at 43a.

C. The Pertinent Proceedings

The district court granted Festo summary judgment on the ground that respondents' devices infringed upon the Carroll patent under the doctrine of equivalents. Pet. App. 43a-44a. The district court found that respondents had failed to come forward with material evidence rebutting Festo's expert testimony that the single two-way sealing ring that respondents employed in their devices was equivalent to the two sealing rings recited in the Carroll patent. *Id.* at 44a. Respondents did not argue that prosecution history estoppel applied to the Carroll patent, *id.* at 53a n.8, but they did raise that defense on summary judgment in response to Festo's argument that respondents' devices infringed upon the Stoll patent, *id.* at 43a-44a. The district court rejected the defense, and Festo's assertion that respondents infringed upon the Stoll patent was tried before a jury. *Id.* at 44a. The jury found, through a special verdict, that respondents' devices infringed upon the Stoll patent under the doctrine of equivalents. *Id.* at 44a-45a.

The court of appeals initially affirmed the district court judgment. Pet. App. 190a-211a. On remand following this Court's decision in *Warner-Jenkinson*, the court of appeals affirmed in part. *Id.* at 156a-189a. The en banc court ultimately reversed the district court's decision in its entirety. *Id.* at 1a-56a. The court decided the appeal by addressing five questions "relating to the doctrine of equivalents that remained in the wake of" *Warner Jenkinson*, see *id.* at 2a-4a, 8a-32a, and then applying its legal determinations to the relevant facts, *id.* at 4a, 45a-56a.

The court concluded in response to Question 1 that an amendment of a patent claim that narrows the scope of

a claim for any reason related to the statutory requirements for a patent will give rise to prosecution history estoppel with respect to the amended portion of the claim. Pet. App. 3a, 8a-11a. The court determined in response to Question 2 that a "voluntary" claim amendment can trigger prosecution history estoppel and should be treated the same as claim amendments made in response to a patent examiner's rejection. *Id.* at 3a-4a, 11a-13a. In response to Question 3, the court concluded that, when a claim amendment gives rise to prosecution history estoppel, the amendment acts as a "complete bar" and precludes any invocation of the doctrine of equivalents for the amended portion of the claim. *Id.* at 4a, 13a-30a. In response to Question 4, the court ruled that "unexplained" amendments likewise are not entitled to any range of equivalents. *Id.* at 4a, 31a. The court declined to decide Question 5, which asked whether a judgment of infringement in this case would violate the "all elements" rule established in *Warner-Jenkinson*, because its resolution of the prior questions, when applied to the facts of this case, rendered the question moot. *Id.* at 4a, 31a-32a.

The court of appeals applied its legal determinations to the facts of this case and concluded that those determinations mandated reversal of the district court's decision. See Pet. App. 45a-56a. The court ruled that, because the relevant claim elements of the Stoll and Carroll patents were the product of amendments that narrowed the claims, and because Festo did not establish explanations for those amendments unrelated to patentability, the amendments gave rise to prosecution history estoppel, which completely bars the application of the doctrine of equivalents to the amended portions of those claims. *Id.* at 56a. Four judges dissented in part from that ruling, objecting principally

to the court's application of prosecution history estoppel as a "complete" bar to invocation of the doctrine of equivalents. See *id.* at 69a-70a (Michel, J.); *id.* at 111a-113a (Rader, J.); *id.* at 113a-114a (Linn, J.); *id.* at 131a-133a (Newman, J.).

SUMMARY OF ARGUMENT

This Court's decision in *Warner-Jenkinson Co.* v. *Hilton Davis Chemical Co.*, 520 U.S. 17 (1997), describes the interplay between the doctrine of equivalents and prosecution history estoppel. That decision makes clear that the doctrine of equivalents plays a carefully circumscribed role in determining the scope of patent claims and that prosecution history estoppel remains an important limitation on the role of that doctrine. This case presents two important questions respecting prosecution history estoppel that *Warner-Jenkinson* did not expressly answer. They should be resolved by reference to that decision and its recognition of the central balance that must be struck between the public's need for clarity of patent coverage and the patent holder's need for fair protection from infringement.

A. The court of appeals correctly ruled that an amendment of a patent claim that narrows the scope of the claim for reasons of patentability gives rise to prosecution history estoppel with respect to the amended portion of that claim. That result follows from this Court's decision in *Warner-Jenkinson*, which reaffirmed the longstanding principle that a patent applicant who narrows the initial claims and effectively surrenders subject matter as a condition for obtaining a patent implicitly disclaims any right to a patent for the subject matter that was surrendered. Nevertheless, a court must carefully analyze the claim amendment in

the context of the alleged infringement to ensure that the amendment does indeed manifest a narrowing of the claim that surrenders relevant subject matter. A court should apply prosecution history estoppel only if the particular terms of the amendment narrow the relevant claim in that manner.

B. The court of appeals erred in ruling that a patent claim amendment that gives rise to prosecution history estoppel completely bars invocation of the doctrine of equivalents for the amended portion of the claim. The court concluded that its prior approach to prosecution history estoppel, which applied a "flexible bar," was unworkable because it did not provide certainty with respect to the scope of patent protection. While that prior approach was unsatisfactory, the court's "complete bar" does not comport with this Court's measured perspective in *Warner-Jenkinson* and fails to strike a sound balance between certainty of patent scope and fair protection of patent rights. In keeping with its approach in *Warner-Jenkinson*, this Court should hold the patent holder subject to a presumption that narrowing amendments preserved no range of equivalents. The patent holder could overcome that presumption by showing a concrete basis, based on the patent prosecution record and relevant to the specific context of the infringement suit, for extending the amended portion of the claim beyond its literal terms to encompass equivalent elements. That approach would substantially diminish the unacceptably high level of uncertainty that presently inheres in the application of prosecution history estoppel while fairly protecting the interests of patent holders.

C. Because the court of appeals erred in ruling that prosecution history estoppel completely bars the doctrine of equivalents for amended claims, the court's

judgment should be vacated and the case remanded for further proceedings. The court of appeals should remand the case to the district court for a determination of whether the patent claims were narrowed in a way that would lead to prosecution history estoppel. If so, the court should place the burden on the patent holder to overcome the presumption that the literal terms of the relevant claim elements describe the full scope of the patents.

ARGUMENT

THE COURT OF APPEALS CORRECTLY RULED THAT A PATENT CLAIM AMENDMENT THAT NARROWS THE SCOPE OF A CLAIM GIVES RISE TO PROSECUTION HISTORY ESTOPPEL, BUT THE COURT ERRED IN HOLDING THAT PROSECUTION HISTORY ESTOPPEL COMPLETELY PRECLUDES APPLICATION OF THE DOCTRINE OF EQUIVALENTS

This Court's decision in *Warner-Jenkinson Co.* v. *Hilton Davis Chemical Co.*, 520 U.S. 17 (1997), has greatly clarified the role of the doctrine of equivalents in patent infringement suits. The Court has made clear that the scope of a patent is controlled primarily by the "statutory claiming requirement" of the patent laws, see 35 U.S.C. 112, which requires the patent applicant to set out with precision the claim limitations that define the scope of the invention. See 520 U.S. at 28-30. The patent claims, which serve both "definitional and public-notice" functions, *id.* at 29, establish the critical dimensions of a patent's protection. The doctrine of equivalents plays a strictly confined role in ascertaining those dimensions in response to a claim of infringement. The doctrine—which takes into account that the limits of language may result in unavoidably imprecise patent

claims and that the patent owner is entitled to protection from infringement by products that differ only through insubstantial deviations from the patent's verbal formulation—provides the patent holder with a limited measure of protection beyond the patent's literal terms. See *id.* at 28-29, 40.

Warner-Jenkinson has also clarified the relationship between the doctrine of equivalents and the concept of prosecution history estoppel. Prosecution history estoppel, a judge-made principle that recognizes that patent claim amendments frequently result in a diminishment of the patent's scope, remains an important limitation on the doctrine of equivalents. 520 U.S. at 30, 33-34. But the Court made clear that the reason for the amendment is central to the estoppel analysis. *Id.* at 30-31, 32. "Mindful that claims do indeed serve both a definitional and a notice function," the Court "place[d] the burden on the patent holder to establish the reason for an amendment required during patent prosecution." *Id.* at 33. If the patent holder fails to come forward with a reason for amending an element of the claim, then the district court "should presume that the patent applicant had a substantial reason related to patentability for including the limiting element" and "prosecution history estoppel would bar the application of the doctrine of equivalents as to that element." *Ibid.*

This case presents two questions that *Warner-Jenkinson* did not explicitly decide: (1) whether an amendment of a patent claim that narrows the scope of the claim for any reason related to the statutory requirements for a patent gives rise to prosecution history estoppel with respect to the amended portion of the claim; and (2) whether a patent claim amendment that gives rise to prosecution history estoppel completely precludes invocation of the doctrine of equivalents for

the amended portion of the claim. The en banc court of appeals answered each of those questions affirmatively.

We submit that the starting point of the analysis should be *Warner-Jenkinson*, which marks this Court's baseline for ascertaining the relationship between the doctrine of equivalents and prosecution history estoppel. That decision recognizes the continued vitality of a properly limited doctrine of equivalents, 520 U.S. at 21, but emphasizes the "definitional and public-notice functions of the statutory claiming requirement," *id.* at 29, and the important role that the PTO's patent prosecution process plays in ensuring that the patent claims are stated with precision and limited to properly patentable subject matter, *id.* at 33-34. The analysis should take account of the central tension in patent law between the public's need for clarity of patent coverage, both to avoid trespassing on patent holders' rights and to spur innovations, and the patent holder's need for fair protection from infringement by products that differ only insubstantially from the patented invention. See, *e.g.*, Donald Chisum, *The Scope Of Protection For Patents After The Supreme Court's Warner-Jenkinson Decision: The Fair Protection-Certainty Conundrum*, 14 Santa Clara Computer & High Tech. L.J. 1 (1998).

A. An Amendment Of A Patent Claim That Narrows The Scope Of A Claim For Reasons Related To The Statutory Requirements For A Patent Gives Rise To Prosecution History Estoppel With Respect To The Amended Portion Of The Claim

The court of appeals correctly concluded that "a narrowing amendment made for any reason related to the statutory requirements for a patent will give rise to prosecution history estoppel with respect to the amended claim element." Pet. App. 9a. The court's

ruling is consistent with *Warner-Jenkinson* and rests on familiar principles of patent law.

1. *Warner-Jenkinson* rejected the argument that "any surrender of subject matter during patent prosecution, regardless of the reason for such surrender, precludes recapturing any part of that subject matter, even if it is equivalent to the matter expressly claimed." 520 U.S. at 30. Rather, a district court faced with an assertion of prosecution history estoppel in an infringement suit must examine "the reason for an amendment." *Ibid.* The Court indicated that prosecution history estoppel most commonly arises as a result of "amendments made to avoid the prior art," *ibid.*, a reason that invariably gives rise to prosecution history estoppel. See, *e.g.*, *Exhibit Supply Co.* v. *Ace Patents Corp.*, 315 U.S. 126, 136 (1942); *Keystone Driller Co.* v. *Northwest Eng'g Corp.*, 294 U.S. 42, 48 (1935); *Smith* v. *Magic City Kennel Club, Inc.*, 282 U.S. 784, 789-790 (1931). The Court further noted that prosecution history estoppel also arises from amendments made to address a specific concern "that arguably would have rendered the claimed subject matter unpatentable." *Warner-Jenkinson*, 520 U.S. at 30-31. See *Crawford* v. *Heysinger*, 123 U.S. 589, 606 (1887) (applying prosecution history estoppel to amendments made in response to operability rejections).[1]

[1] The Court relied primarily on its own precedent to reject the argument that prosecution history estoppel applies without regard to the reason for an amendment. See *Warner-Jenkinson*, 520 U.S. at 30-31 & n.5. But the Court also noted that the focus on patentability is appropriate in light of patent policy and practice. The Court stated that there is "no substantial cause for requiring a more rigid rule," *id.* at 32, noting that the PTO may have relied upon a more "flexible" approach and that altering current practice "could very well subvert the various balances the PTO sought to strike when issuing the numerous patents which have not yet expired," *id.* at 32 n.6.

That conclusion has compelling force. A patent applicant who narrows the initial claims and effectively surrenders subject matter as a condition for obtaining a patent implicitly disclaims any right to a patent for the subject matter that was surrendered. See, *e.g.*, *Exhibit Supply*, 315 U.S. at 136; *Cybor Corp.* v. *FAS Techs., Inc.*, 138 F.3d 1448, 1460 (Fed. Cir. 1998) (en banc). As the court of appeals explained, it should not matter whether the impetus was a prior art rejection or some other patent law requirement. Pet. App. 9a-11a. In either situation, the patent applicant, who presumably seeks the broadest patent possible, has effectively made a public disclaimer of the surrendered subject matter in exchange for the patent. Prosecution history estoppel simply implements the predictable consequence that the applicant's patent rights are commensurately limited. The court of appeals was accordingly correct in concluding that a claim amendment gives rise to prosecution history estoppel whenever "the patent applicant had a substantial reason related to patentability for including the limiting element added by amendment." *Warner-Jenkinson*, 520 U.S. at 33.

2. This Court's decision in *Warner-Jenkinson* indicates that discerning analysis is nevertheless necessary when applying the court of appeals' ruling. An amendment, even one related to patentability, "does not necessarily preclude infringement by equivalents of that element." 520 U.S. at 33. As the court of appeals' post-*Festo* decisions emphasize, a claim amendment does not give rise to prosecution history estoppel unless it manifests a *narrowing* of the patent claim that surrenders relevant subject matter. See, *e.g.*, *Turbo-*

care Div. v. *General Elec. Co.*, No. 00-1349 (Fed. Cir. Aug. 29, 2001), slip op. 24-25; *Lockheed Martin Corp.* v. *Space Sys./Loral, Inc.*, 249 F.3d 1314, 1326 (Fed. Cir. 2001); *Litton Sys., Inc.* v. *Honeywell Inc.*, 238 F.3d 1376, 1380 (Fed. Cir.), petition for cert. pending, No. 00-1617 (filed Apr. 23, 2001).[2]

Patent applicants may amend their patent claims for reasons of patentability—such as to clarify an ambiguous term—that do not result in narrowing the claims and surrendering subject matter. Rather, the amendments may state the same—or broader—patent claims in more precise terms. For example, an applicant may amend by rewriting a dependent claim as an independent claim. See *Honeywell Int'l Inc.* v. *Hamilton Sundstrand Corp.*, No. Civ. A. 99-309 GMS, 2001 WL 66348, at *6 (D. Del. Jan. 8, 2001) (citing *Festo*). Such amendments do not give rise to prosecution history estoppel, which has as its core functions "preserving the notice function of the claims and preventing patent holders from recapturing under the doctrine of equiva-

[2] See also *Graco Children's Prods., Inc.* v. *Regalo Int'l, LLC*, No. 97-CV-6885, 2001 WL 392886, at *3-*4 (E.D. Pa. Apr. 17, 2001) (adding language to a claim that merely restated a limitation that was already present did not give rise to prosecution history estoppel because it did not narrow the scope of the claim); *SRAM Corp.* v. *AD-II Eng'g, Inc.*, No. 00 C 6675, 2001 WL 817857, at *10 (N.D. Ill. July 9, 2001) (an amendment to the patent specification, but not the patent claims, that overcame a rejection for indefiniteness by supplying the antecedent basis for a claim limitation did not trigger prosecution history estoppel because it did not narrow the scope of the patent claim); see also *TM Patents, LLP* v. *IBM Corp.*, 136 F. Supp. 2d 209, 217 (S.D.N.Y. 2001) ("*Festo*, by its terms, applies only to amendments that *narrow* the scope of patent claims."); *Pickholtz* v. *Rainbow Techs., Inc.*, 125 F. Supp. 2d 1156, 1161 (N.D. Cal. 2000) ("the court must consider whether the amendments 'narrowed the literal scope of the claim'").

lents subject matter that was surrendered before the Patent Office." Pet. App. 11a. Patent applicants should not be deterred by the specter of prosecution history estoppel from making amendments that preserve the claimed subject matter but state their claims more precisely and thereby enhance the notice function of the patent claims. Thus, even if a patent claim is amended for reasons of patentability, a court should apply prosecution history estoppel only if the particular terms of the amendment narrow the relevant claim.[3]

B. An Amendment Of A Patent Claim That Gives Rise To Prosecution History Estoppel Presumptively Precludes Invocation Of The Doctrine Of Equivalents For The Amended Portion Of The Claim

The court of appeals' conclusion that a narrowing amendment related to patentability gives rise to prosecution history estoppel leads directly to the ques-

[3] Patent law requires a similar inquiry when a patent holder seeks reissuance of a patent. See 35 U.S.C. 252 para. 1 (1994 & Supp. V 1999); see also Pet. App. 76a-77a (Michel, J., dissenting in part). In that situation, the issue is whether a modification of claim language in the reissuance application actually changes the substantive scope of a claim limitation so as to "recapture" subject matter surrendered at the time of the original issuance. See *Leggett* v. *Avery*, 101 U.S. 256, 260 (1880). The recapture inquiry and the question whether a claim amendment gives rise to prosecution history estoppel are analogous in that both look to and depend upon the same basic inquiry—whether a patentee surrendered subject matter during patent prosecution. See, *e.g.*, *Hester Indus., Inc.* v. *Stein, Inc.*, 142 F.3d 1472, 1480-1483 (Fed. Cir.) (comparing the breadth and scope of original and amended claim limitations), cert. denied, 525 U.S. 947 (1998); see also *Seattle Box Co.* v. *Industrial Crating & Packing, Inc.*, 731 F.2d 818, 827-828 (Fed. Cir. 1984) (determining whether reissue claims have the same substantive scope as original claims so that there is liability for pre-reissue activities).

tion of what effect the estoppel has in the infringement proceeding. The court of appeals concluded, as to that question, that "[w]hen a claim amendment creates prosecution history estoppel with regard to a claim element, there is no range of equivalents available for the amended claim element." Pet. App. 13a-14a. Under the court's ruling, "[a]pplication of the doctrine of equivalents to the claim element is completely barred." *Id.* at 14a. In this respect, it is our view that the court's ruling goes too far.

1. The court of appeals based its decision to impose a "complete bar" largely on "its special expertise" in resolving judicially created rules of patent law and reconciling conflicts among its own decisions. Pet. App. 19a, 24a. The court detected two lines of authority among its precedents. In its view, decisions such as *Hughes Aircraft Co.* v. *United States*, 717 F.2d 1351 (Fed. Cir. 1983), treated prosecution history estoppel as imposing a "flexible bar" on the range of equivalents "within a spectrum ranging from great to small to zero," *id.* at 1363. Pet. App. 19a. But, according to the court, decisions such as *Kinzenbaw* v. *Deere & Co.*, 741 F.2d 383 (Fed. Cir. 1984), cert. denied, 470 U.S. 1004 (1985), treated prosecution history estoppel as a "complete bar" that precluded the "speculative inquiry" of whether a narrowing amendment has preserved a range of equivalents beyond its literal terms, *id.* at 389. Pet. App. 20a-21a. See *id.* at 21a-24a (discussing commentary on the allegedly contradictory lines of authority); but see *id.* at 91a-93a (Michel, J., dissenting in part) (disputing whether there are contradictory lines of authority); *id.* at 129a (Linn, J., dissenting in part) (same).

The court of appeals concluded that the flexible bar had proved "unworkable" because it does not provide

"certainty as to the scope of patent protection." Pet. App. 24a-25a. According to that court, a flexible bar leaves the public, the patent holder, and competitors unable to predict until completion of the infringement suit "where the line of surrender is drawn," *id.* at 25a, and fails "to enforce the disclaimer effect of a narrowing claim amendment," *id.* at 26a. A complete bar, by contrast, "provides the public and the patentee with definite notice as to the scope of the claimed invention," *id.* at 28a, and allows competitors to improve and "design around" the claimed invention "without being inhibited by the threat of a lawsuit" from developing new innovations, *id.* at 30a. The court additionally noted that a complete bar "reins in the doctrine of equivalents" and "reduces the conflict and tension between the patent protection afforded by the doctrine of equivalents and the public's ability to ascertain the scope of a patent." *Ibid.*

2. The policy concerns that led the court of appeals to adopt its "complete bar" are substantial. The United States unsuccessfully petitioned for a writ of certiorari in *Hughes Aircraft Co.* v. *United States*, 140 F.3d 1470, reh'g denied over dissents, 148 F.3d 1384 (Fed. Cir. 1998), cert. denied, 525 U.S. 1177 (1999), after a divided court of appeals subjected the government to an infringement judgment of more than $100 million based on that court's pre-*Festo* conception of prosecution history estoppel. As explained in that petition, the court's estoppel analysis "failed to recognize what [the applicant] had surrendered when amending his patent claim in response to prior art." See Pet. at 16, *United States* v. *Hughes Aircraft Co.*, cert. denied, 525 U.S. 1177 (1999) (No. 98-871).

While the court's pre-*Festo* practice did not sufficiently confine the doctrine of equivalents, the court's

adoption of a complete-bar rule fails to strike the right balance between the public interest in certainty of patent scope and the patent holder's interest in the fair protection of the patent right. This Court's conclusion in *Warner-Jenkinson* that the doctrine of equivalents retains vitality necessarily requires that the courts make an accommodation between those competing interests. That decision counsels in favor of imposing estoppel more rigorously, but it counsels against applying prosecution history estoppel as a rigid and potentially unfair rule that would completely preclude resort to the doctrine of equivalents for amended patent claims.

First, *Warner-Jenkinson* indicates that a primary constraint on the doctrine of equivalents should involve analytic discipline by the courts when conducting the fact-specific inquiry into whether two products or processes are equivalent. See 520 U.S. at 28-29. The Court adopted the all-elements test for precisely that reason, *id.* at 29, and it further emphasized that the "focus on individual elements and a special vigilance against allowing the concept of equivalence to eliminate completely any such elements" are the appropriate means for confining the doctrine to its proper sphere, *id.* at 40. In effect, *Warner-Jenkinson* directs lower courts to construe equivalents as narrowly as necessary, on a case-by-case basis, to preserve "the definitional and public-notice functions of the statutory claiming requirement." *Id.* at 29; see also *id.* at 29-30.

Second, *Warner-Jenkinson* refused to adopt a similarly "rigid" rule for assessing prosecution history estoppel, notwithstanding the clarity such a rule might impart, because it would have the effect of substantially undermining the stability of the PTO's patent prosecution process. See 520 U.S. at 32 & n.6. The "complete

bar" rule would have a similar effect. The holders of the "numerous patents which have not yet expired," *id.* at 32 n.6—most of which contain amended claims—are properly charged with knowledge that narrowing amendments would give rise to prosecution history estoppel, but they could not have anticipated that those amendments would necessarily result in an absolute bar to any range of equivalents. See Pet. App. 110a (Michel, J., dissenting in part); *id.* at 113a (Linn, J., dissenting in part). At the same time, current and future applicants could be rendered reluctant to amend claims in pending applications for fear of eliminating protection against equivalents. That consequence would not only discourage the give-and-take between the PTO patent examiners and applicants that leads to more refined claims, see *In re Zletz*, 893 F.2d 319, 322 (Fed. Cir. 1989), but it would also substantially diminish the future effectiveness of the court's complete bar in "rein[ing] in the doctrine of equivalents," Pet. App. 30a. See *id.* at 108a-110a (Michel, J., dissenting in part); *id.* at 120a-121a (Linn, J., dissenting in part). Hence, the disadvantages that the Court in *Warner-Jenkinson* discerned with a "rigid rule" are also present here. There is, in short, a logical limit to how much baggage the question whether or not there has been an amendment can be expected to carry in preventing the doctrine of equivalents from "tak[ing] on a life of its own." *Warner-Jenkinson*, 520 U.S. at 28-29.

Third, *Warner-Jenkinson* makes clear that the concept of prosecution history estoppel, even when applied in the most common context of determining the effect of amendments designed to avoid prior art, may require some inquiry into the record to determine what range of equivalents is precluded. The Court specifically pointed out that, in the case of such amendments, a

court may permissibly consider "the manner in which the amendment addressed and avoided the objection." 520 U.S. at 33 n.7. This Court's past decisions likewise acknowledge the relevance of such an inquiry. See Pet. App. 78a-84a (Michel, J., dissenting in part) (discussing *Goodyear Dental Vulcanite Co.* v. *Davis*, 102 U.S. 222 (1880), and *Hurlbut* v. *Schillinger*, 130 U.S. 456 (1889)). The court of appeals' holding that a narrowing amendment related to patentability completely bars any equivalents would make that inquiry unnecessary.

3. This Court's decision in *Warner-Jenkinson* provides guidance on how to resolve the basic tension, common to the doctrine of equivalents and prosecution history estoppel, between the public's interest in certainty and the patent holder's interest in a fair scope of protection. That decision recognized the value of regulating the use of prosecution history estoppel through burdens of proof and presumptions that accurately reflect the consequences that patent holders and competitors should reasonably expect to result from claim amendment. See 520 U.S. at 33. The Court can likewise use those constructs to formulate a proper role for prosecution history estoppel that promotes the patent law's goal of providing certainty, without imposing an unduly rigid, and potentially draconian, rule.

In *Warner-Jenkinson*, the Court concluded that the patent holder bears the burden of "establish[ing] the reason for an amendment required during patent prosecution." 520 U.S. at 33. If the patent holder fails to establish the reason, the district court "should presume that the patent applicant had a substantial reason related to patentability" that "would bar the application of the doctrine of equivalents." *Ibid.* In this case, the Court can place a comparable burden on the patent

holder to demonstrate that the applicant's narrowing amendments preserved a range of equivalents that provide a basis for asserting infringement. In the absence of a concrete showing, based on the patent prosecution record and relevant to the specific context of the infringement suit, the district court should presume that, when the applicant narrowed its claims to obtain a patent, it limited those claims to their literal terms.[4]

The patent holder rightly should bear the burden of demonstrating that the claim amendments preserve the type of equivalents at issue because the patent laws themselves require the patent applicant to define claims with specificity, 35 U.S.C. 112, "not only to secure to him all to which he is entitled, but to apprise the public of what is still open to them." *McClain* v. *Ortmayer*, 141 U.S. 419, 424 (1891). It is "just and fair, both to the patentee and to the public," to expect that the patentee will "understand, and correctly describe, just what he has invented, and for what he claims a patent." *Merrill* v. *Yeomans*, 94 U.S. 568, 573-574 (1877). When a patent applicant is faced with a rejection, the conscientious applicant will focus attention on the precise consequences of a narrowing amendment. In that situation, the applicant, who "is master of his

---

[4] This showing should focus on specific facts drawn from the intrinsic evidence reflected in the patent prosecution or the specific technology involved that would lead one of ordinary skill in the art at the time of the amendment to conclude that the asserted equivalent was not fairly within the subject matter surrendered. Extrinsic evidence, such as expert testimony, might be used to explain but not to contradict such intrinsic evidence. Cf. *Vitronics Corp.* v. *Conceptronic, Inc.*, 90 F.3d 1576, 1582-1583 (Fed. Cir. 1996) (recognizing that extrinsic evidence may not be used to derogate from public record in construing patent claims).

claims," Pet. App. 67a (Lourie, J., concurring), can be expected to give especially fastidious attention to carefully defining the scope of the amended claim. It is accordingly "just and fair" to place the burden on the patent holder to demonstrate that the claim amendments preserve the type of equivalents at issue in the infringement suit.

It is also "just and fair" to establish a presumption that the narrowing amendment states the exact limits of the patent claim. When a patent applicant is faced with a rejection, the applicant has a particularly powerful incentive to frame its narrowing amendment as expansively as possible and to avoid surrendering any more subject matter than necessary to secure the patent. Indeed, the Court has stated that, when a patent applicant submits a narrowing amendment to avoid prior art, the applicant by necessary implication disclaims the range of equivalents that falls between the original and the amended claims. See, *e.g.*, *Exhibit Supply*, 315 U.S. at 136. Thus, patent holders have long been on notice that they cannot assume, without considerable risk, that a narrowing amendment, made to overcome a patentability rejection, will embrace more than its literal terms. They must correspondingly draft their amendments with care.

The proposed presumption would preserve the full literal scope of the amended claim. A patent applicant who has made a narrowing amendment related to patentability can continue to claim infringement by a device that includes, for the amended element, a new element that falls outside of what the amendment surrendered. As this Court recognized in *Exhibit Supply*, a patent applicant that narrows claims in response to a prior art rejection "recognize[s] and emphasize[s] the difference between the [original language and the

amended language] and proclaim[s] his abandonment of *all that is embraced in that difference*." 315 U.S. at 136 (emphasis added). Hence, an applicant who wishes to describe a means for joining two pieces of wood, but wishes to avoid prior art disclosing glue and wooden pegs, might use the term "metal fasteners"—rather than "screws" or "nails"—to ensure literal coverage of the full range of metal fastening devices. An applicant does not surrender subject matter, including alternative means for accomplishing the same result, that careful drafting has preserved. See, *e.g.*, *ACLARA Biosciences, Inc.* v. *Caliper Techs. Corp.*, 125 F. Supp. 2d 391, 400-403 (N.D. Cal. 2000).

But the presumption would require the patent holder to show a concrete basis, based on the patent prosecution record and relevant to the specific context of the infringement suit, for a non-literal extension of a claim element that was narrowed to obtain a patent. This approach would have the advantage of promoting the certainty of scope that the court of appeals found lacking under its "flexible bar" jurisprudence. See Pet. App. 28a-30a. At the same time, it would prevent the injustice that could result from imposing a complete bar in certain exceptional situations where the preclusion of all equivalents would deny a patent holder a fair scope of protection. Two such situations are apparent.

First, a patent holder should be allowed to assert that an accused device infringes under the doctrine of equivalents if the court finds that the assertedly equivalent element is itself an innovation that was not known to persons of ordinary skill in the art at the time the applicant amended the claim. Prosecution history estoppel rests on the rationale that the applicant's claim amendment manifests a surrender of subject matter. But the applicant should not be charged with such a

surrender if the equivalent supposedly surrendered did not exist and was not reasonably within the contemplation of the PTO and the applicant at the time of the claim amendment. Rather, the patent holder should have the opportunity to establish that use of an innovation satisfies the conditions for equivalence. See Pet. App. 111a-113a (Rader, J., dissenting in part); cf. *Warner-Jenkinson*, 520 U.S. at 37 ("the proper time for evaluating equivalency—and thus knowledge of interchangeability between elements—is at the time of infringement, not at the time the patent was issued").

Second, a patent holder should be entitled to assert that an accused device infringes under the doctrine of equivalents if the court concludes that, owing to the nature of the subject matter at issue, it was not possible for one of ordinary skill in the art to draft a claim amendment that literally encompassed the allegedly equivalent element while disclaiming the surrendered subject matter. The doctrine of equivalents arose from concerns that the "unsparing logic" of literalism can deny the patent holder fair patent protection. *Royal Typewriter Co.* v. *Remington Rand, Inc.*, 168 F.2d 691, 692 (2d Cir.) (L. Hand, J.), cert. denied, 335 U.S. 825 (1948). The courts can properly insist that prosecution history estoppel requires applicants to draft claim amendments to encompass literally all the equivalents they wish to include. But there may be some instances in which the literal terms cannot reasonably describe all of the insubstantial substitutes that might be conceived for a particular element. In those instances, the doctrine of equivalents should be available to protect the patent holder from trivial or manifestly insubstantial changes that unambiguously deny the inventor "the benefit of his invention." *Graver Tank & Mfg. Co.* v. *Linde Air Prods. Co.*, 339 U.S. 605, 607 (1950).

The courts should exercise discipline in assessing assertions from patent holders that claim amendments could not have been crafted with greater precision, lest they invite wholesale return to the court of appeals' "flexible bar approach," which that court properly concluded is "unworkable." Pet. App. 25a. That inquiry should proceed as a matter of law. See *Markman* v. *Westview Instruments, Inc.*, 517 U.S. 370 (1996) (courts, rather than juries, construe patent claims). It is not likely to be burdensome because the courts have a ready benchmark for evaluating such claims. A court can compare the actual claim amendment against the alternative claim formulations that a person of ordinary skill in the art could have adopted to provide literal coverage of the alleged equivalent. Given the versatility of language, patent holders will face a substantial obstacle in overcoming the presumption that their narrowed claims encompass no more than they literally embrace. But that challenge would not be insurmountable if the technology is complex or the alleged distinctions are trivial. See Pet. App. 107a-108a (Michel, J., dissenting in part) (noting that certain fields, such as biotechnology, place particular demands on literalism in describing the scope of a claim).

Creating a presumption, rather than a complete bar, would not provide absolute certainty respecting the scope of an amended patent claim. But even strictly literal interpretations of claims give rise to questions of construction and, hence, even the court of appeals' complete bar cannot provide absolute certainty. The position that we urge can substantially diminish the unacceptably high level of uncertainty that presently inheres in the application of prosecution history estoppel but still fairly protect the interests of patent holders. Like the application of the doctrine of equiva-

lents itself, the application of the presumption would require courts to exercise judgment and discipline to ensure that the patent claims remain the primary source for determining the scope of patent protection. But that exercise of judgment is unavoidable under a system of patent laws that seeks to balance the public's need for clarity of patent coverage against the patent holder's need for fair protection from infringement.

C. The Court Of Appeals' Judgment Should Be Vacated And The Case Should Be Remanded To The District Court For Further Proceedings

The court of appeals concluded that, because the relevant claim elements of the Stoll and Carroll patents were the product of amendments that narrowed the claims, and because Festo did not establish explanations for those amendments unrelated to patentability, the amendments gave rise to prosecution history estoppel, which had the effect of completely barring application of the doctrine of equivalents to the amended portions of those claims. Pet. App. 56a. If the Court concludes that the court of appeals erred in categorically imposing a complete bar, that court's judgment should be vacated and the case should be remanded for further proceedings to determine what role, if any, the doctrine of equivalents should play in this infringement action.

Because the patent law landscape has changed considerably since the district court initially entered its judgment in 1994, and because further assessment of the facts may be necessary, the court of appeals should remand the case to the district court for reconsideration in the first instance. The initial inquiry on remand should be whether the relevant claims of the Stoll and Carroll patents were narrowed by amendment, in a

respect relevant to the alleged infringement, for reasons related to patentability. If so, then prosecution history estoppel applies and the district court should place the burden on Festo to show, from the patent prosecution record and the characteristics of the claimed infringement, that the presumption that the literal terms of the relevant claim elements describe the full scope of the patents is unwarranted. Festo may make such a showing, for example, by demonstrating that the allegedly equivalent elements are later-developed technologies that were not known to persons of ordinary skill in the art and were therefore not surrendered through the claim amendments. Or Festo may make such a showing by demonstrating that persons of ordinary skill in the art could not reasonably have drafted a patent claim that literally encompassed the allegedly equivalent elements.

CONCLUSION

The judgment of the court of appeals should be vacated and the case should be remanded for further proceedings consistent with the foregoing analysis.

Respectfully submitted.

THEODORE B. OLSON
Solicitor General

STUART E. SCHIFFER
Acting Assistant Attorney General

LAWRENCE G. WALLACE
Deputy Solicitor General

JEFFREY P. MINEAR
Assistant to the Solicitor General

VITO J. DIPIETRO
ANTHONY J. STEINMEYER
JOHN FARGO
HOWARD S. SCHER
GRACE KARAFFA
Attorneys

JAMES A. TOUPIN
General Counsel

JOHN M. WHEALAN
Solicitor

LINDA MONCYS ISACSON
CYNTHIA C. LYNCH
MARK NAGUMO
Associate Solicitors
United States Patent and Trademark Office

AUGUST 2001

AUG 28 2001

(21)

Supreme Court, U.S.
FILED
AUG 28 2001
OFFICE OF THE CLERK

No. 00-1543

IN THE

Supreme Court of the United States

FESTO CORPORATION,

Petitioner,

v.

SHOKETSU KINZOKU KOGYO KABUSHIKI CO., LTD., A/K/A SMC CORPORATION AND SMC PNEUMATICS, INC.,

Respondents.

On Writ of Certiorari to the United States Court of Appeals for the Federal Circuit

BRIEF OF AMICUS CURIAE VINCENT P. TASSINARI IN SUPPORT OF NEITHER PARTY

VINCENT P. TASSINARI
Counsel of Record
Attorney for Amicus
3232 N. Halsted St., #D908
Chicago, IL 60657-3476
(773) 472-0316

Midwest Law Printing Company/Photex - Chicago - (312) 321-0220

23 pp

TABLE OF CONTENTS

TABLE OF CONTENTS i

TABLE OF AUTHORITIES ii

INTEREST OF AMICUS CURIAE 1

SUMMARY OF ARGUMENT 3

ARGUMENT 5

I. APPROACH TO PATENT CLAIM CONSTRUCTION 7

A. Rules of Structure: Subject Matter and Scope 7

B. Rules of Evidence: Intrinsic and Extrinsic 11

C. The Role of Intrinsic and Extrinsic Evidence in Patent Claim Construction 13

D. The Role of § 132(a) Prosecution History as Intrinsic Evidence 14

E. § 132(a) Prosecution History Estoppel 15

1. Amicus Proposed Holding for the Court 17

2. Application of Above Holding to Stoll Claim 1 .. 19

3. Application of Above Holding to Carroll Claim 9 20

II. CONCLUSION 20

TABLE OF AUTHORITIES

CASES **PAGE**

Bose Corp. v. JBL, Inc.,
98 F.Supp.2d 80 (D.Mass. 2000) 8

Festo Corp. v. Shoketsu Kinzoku Kogyo Kabushiki Co.,
234 F.3d 558 (Fed. Cir. 2000) (en banc) 15, 17, 19, 20

Multiform Desiccants, Inc. v. Medzam, Ltd.,
133 F.3d 1473 (Fed. Cir. 1998) 7

Vitronics Corp. v. Conceptronic, Inc.,
90 F.3d 1576 (Fed.Cir.1996) 11, 12

Warner-Jenkinson Co. v. Hilton Davis Chem. Co.,
520 U.S. 17 (1997) 2, 3, 11

STATUTES AND CONSTITUTIONAL PROVISION

35 U.S.C. § 102 ..... passim

35 U.S.C. § 103 ..... passim

35 U.S.C. § 112 ..... passim

35 U.S.C. § 132 ..... passim

35 U.S.C. § 154 ..... passim

U.S. CONST., ART. I, § 8, cl. 8 13

INTEREST OF AMICUS CURIAE[1]

Amicus is a practicing patent attorney who creates on a daily basis prosecution history similar to the prosecution history that now is before the Court. Moreover, Amicus has been directly involved in written exchanges with patent examiners that have resulted in hundreds of prosecution histories. Accordingly, Amicus and those similarly situated will be directly responsible for implementing this Court's ruling on the doctrine of equivalents.

Amicus perceives the lower court's holding is an attempt to curb the rise in patent claim construction litigation. In 1982, the year in which the Court of Appeals for the Federal Circuit was formed, approximately 13.5% of the Federal Circuit's patent opinions addressed patent claim construction issues. Over the next nineteen years, the amount of time that the Federal Circuit has devoted to patent claim construction issues has increased to approximately 38%. As seen in the following chart,[2] this increase itself is experiencing an increase such that Amicus estimates that by the year 2005, over 50% of the Federal Circuit's time addressing patent issues will be devoted to patent claim construction.

---

[1] The written consent of all parties to file this brief has been filed with the Court Clerk. Only the attorney for Amicus authored this brief. Other than Amicus, no person or entity made a monetary contribution to the preparation or submission of this brief. The views contained in this brief are those of Amicus only and may not represent the views of the law firm of the attorney for Amicus or clients of the attorney for Amicus.

[2] Data obtained for each year by dividing the number of Federal Circuit opinions referencing "claim construction" and "patent" with number of Federal Circuit's opinions referencing "patent."

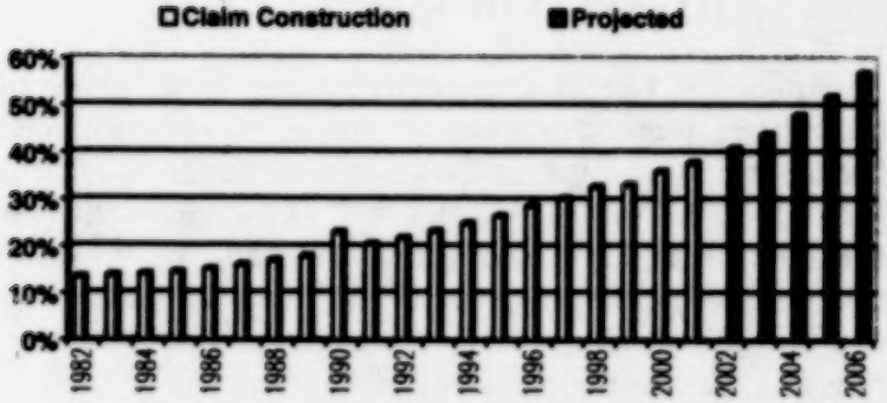

A central reason as to why claim construction has become so prominent on the Federal Circuit's docket is the role claim construction has come to play in a patent infringement lawsuit. Without qualification, it is fair to say that a significant number of infringement cases come down to a dispute over the meaning of a claim term. Simply put, whichever party's definition of the claim term at issue is adopted by the court wins the litigation.

Under the view of Amicus, the lower court sought to curb the tide of claim construction litigation by improperly expanding the actions that give rise to prosecution history estoppel in a fractured opinion that is inconsistent with the directions of *Warner-Jenkinson*. Amicus believes that a way to curb the tide of claim construction litigation is to significantly restrict the use of extrinsic evidence (for example, expert testimony, dictionary definitions, and learned treatises) in claim construction.

Through this brief, Amicus suggests a resolution of the appealed doctrine of equivalents issue that is consistent with the Court's holding in *Warner-Jenkinson* and that may be used as part of an overview of patent claim construction.

SUMMARY OF ARGUMENT

Litigation over the meaning of a patent claim term increasingly is engulfing the lower courts, particularly the Federal Circuit. This case presents the Court with an opportunity to decrease future litigation by issuing a holding on prosecution history estoppel where that holding is placed within the context of an overview of patent claim construction. In particular, the Court may use this case as a vehicle to provide clearer guidance on patent claim construction as a whole.

A. Prosecution History Estoppel

In regards to a holding on prosecution history estoppel, Amicus proposes that the Court reverse the holding of the lower court by allocating the Court's burden-shifting holding of *Warner-Jenkinson* between a patent holder and an alleged infringer. Thus, Amicus proposes the following:

In the absence of a reason for a claim amendment required by the PTO under 35 U.S.C. §§ 102, 103 during patent prosecution, the burden is on the patent holder to establish a reason for the claim amendment by a preponderance of the evidence at the time of issue. In the absence of a reason for a claim amendment not required by the PTO under 35 U.S.C. §§ 102, 103 during patent prosecution, the burden is on the alleged infringer to establish a reason for the claim amendment by a preponderance of the evidence at the time of infringement.

The reason for the claim amendment at issue must be related directly to the patentee giving up § 112(a) scope of the § 112(b) subject matter in response to the requirements under either 35 U.S.C. § 102 or 35 U.S.C. § 103 and in exchange for a patent grant.

As set out in detail below, the court then would, as appropriate, determine whether the position of the patent holder is to be restricted by 35 U.S.C. § 132(a) prosecution history estoppel.

The described § 132(a)[3] prosecution history estoppel in this brief gives proper deference to the role of the § 154 patent document and § 132(a) prosecution history in both establishing the property rights of a patent holder and in providing public notice. Moreover, proper deference is given to the primacy of the PTO in ensuring that the claims allowed cover only the § 112(b) subject matter that is properly patentable in a proffered patent application. Applied in this fashion, § 132(a) prosecution history estoppel places § 112(a) doctrine of equivalents within the structure of the Patent Act and places reasonable limits on the doctrine.

B. Overview of patent claim construction

Regarding an overview of patent claim construction, Amicus proposes that the Court define intrinsic evidence as evidence within the § 154 patent document and the § 132(a) prosecution history as well as that which can be logically inferred from this evidence. Extrinsic evidence is evidence that is external to the § 154 patent document and the § 132(a) prosecution history. Only intrinsic evidence may be used to give legal meaning to the terms in a patent claim. Extrinsic evidence at most shall only be used as a court-aid to linguistically understand the terms used in a patent.

The above rules prevent plaintiff and defense patent litigation attorneys from elevating linguistic extrinsic evidence

[3] All section numbers in this brief refer to Title 35, United States Code, unless otherwise noted.

to intrinsic legal meaning within a patent through expert testimony, dictionary definitions, and learned treatises. In turn, this will compel those who prepare patent applications to include more detailed description on each claim term as of the date of filing that application. At present, accused infringers are subject to the rule that inventors have the right to be their own lexicographer. Under the above holding, inventors would have a duty to be their own lexicographer or else suffer a loss of scope of the claimed subject matter.

ARGUMENT

In general, a 35 U.S.C. § 154 patent document carries with it a written description and at least one claim as part of a specification. The requirements for the specification are set out in 35 U.S.C. § 112.

In practice, referencing to § 112 is made difficult by the lack of section markers in that statute. The adopted section markers (a)(1), (a)(2), (a)(3), (b), etc. for § 112 would make future reference to the sections of this statute clearer. For the purpose of this brief, the relevant sections of § 112 are delineated in part, made gender neutral, and textually modified for clarity as follows:

[35 U.S.C. § 112 compiled on next page for clarity]

35 U.S.C. § 112. Specification (as modified by Amicus)

(a) The scope of the claimed subject matter

(1) Description

The specification shall contain a written description of the invention.

(2) Enablement

The specification shall contain a written description of the manner and process of making and using the invention, in such full, clear, concise, and exact terms as to enable any person skilled in the art to which it pertains, or with which it is most nearly connected, to make and use the invention.

(3) Best mode

The specification shall set forth the best mode contemplated by the inventor of carrying out the invention.

(b) The claimed subject matter

The specification shall conclude with one or more claims particularly pointing out and distinctly claiming the subject matter that the applicant regards as the claimed invention.

...

(f) Means/Step plus function

(1) Without the recital of structure, material, or acts, a term in a claim for a combination under subsection (b) may be expressed as a **(A)** means for performing a specified function or **(B)** step for performing a specified function.

(2) A claim term under subsection (f)(1) shall be construed to cover **(A)** the corresponding structure, material, or acts described in the specification and **(B)** the equivalents of the corresponding structure, material, or acts described in the specification.

I. APPROACH TO PATENT CLAIM CONSTRUCTION

A. Rules of Structure: Subject Matter and Scope

In general, an invention patent claim is a group of claim terms tangibly fixed as a unit in a government-issued, legal document that particularly and distinctly recites the 35 U.S.C. § 112(b) subject matter that the inventor regards as the claimed invention. Each claim term may include one or more words.

All words have at least one linguistic meaning. Thus, the words used to convey claim terms incidentally have at least one linguistic meaning. However, this linguistic meaning of the claim words does not determine the federal property rights of the inventor. Rather, it is the legal meaning given to a claim term by the inventor that determines the federal property rights of the inventor. As articulated in a lower court decision:

> Courts must exercise caution lest dictionary definitions, usually the least controversial source of extrinsic evidence, be converted into technical terms of art having legal, not linguistic, significance.[4]

Consistent with this, federal law under § 112 puts the burden on the inventor to establish the legal meaning of a patent claim term within the patent document as of the time of filing the patent application. To understand how an individual preparing a patent application achieves this, it is important to understand how the Patent Act structurally sets out the requirements for the legal meaning of a patent claim term.

---

[4] *Multiform Desiccants, Inc. v. Medzam, Ltd.*, 133 F.3d 1473, 1478 (Fed. Cir. 1998).

It is a proposition of this brief that Congress divided the meaning of a patent claim term into two subsections. A first portion is under § 112(b). The remaining portion is under § 112(a). Here, the legal meaning of a patent claim term divides into the subject matter of that claim term and the scope of that subject matter, namely:

- meaning = subject matter + scope of subject matter.[5]

As textually expressed in § 112(b), only the subject matter of a claim term is to be placed within the claims. Accordingly, the scope of the § 112(b) subject matter must reside somewhere else. Although not textually expressed, case law after case law has resorted to the parts of the patent document disclosed under § 112(a) to derive the scope of a patent claim term. Accordingly, the Patent Act structurally divides the legal meaning of a patent claim term into the § 112(b) subject matter of that claim term and the § 112(a) scope of the subject matter of that claim term.

---

[5] Other concepts to this proposed overall approach are as follows:

- the doctrine of equivalents is included as part of § 112(a);
- prosecution history estoppel is under 35 U.S.C. § 132(a) (*See Bose Corp. v. JBL, Inc.*, 98 F.Supp.2d 80, 90 (D.Mass. 2000);
- § 132(a) prosecution history estoppel operates on *both* the literal scope and doctrine of equivalents scope of § 112(a);
- § 112(a) doctrine of equivalents scope applies to § 112(f)(2)(B) means/step plus function equivalents; and
- § 132(a) prosecution history estoppel applies to § 112(f)(2)(B) means/step plus function equivalents through § 112(a) doctrine of equivalents scope.

After exhaustive research, Amicus has not found the following view articulated: (i) that § 112(a) sets out the scope requirement of patent claim term meaning and (ii) that the § 112(b) subject matter of a claim term is insufficient by itself to determine patent claim term meaning. This view does, however, provide a core basis from which an overview of patent claim construction may be developed. For example, a current goal of patent claim construction imprecisely asks "what is the scope and meaning of each claim limitation?". However, it is more precise to ask "what scope did the inventor give the subject matter of each claim term?". Moreover, in view of the claim term by claim term approach to patent infringement, a more workable approach to analyzing each claim term would be to determine "whether an element of the accused device is within or without the § 112(a) scope of the § 112(b) subject matter of the claim term."

Dividing patent claim term meaning into subject matter and scope of subject matter provides other techniques to gain insight into patent claim construction. For example, the § 112(b) subject matter representing one claim term and the § 112(a) scope of that subject matter as originally filed may be visualized as in Figure 1:

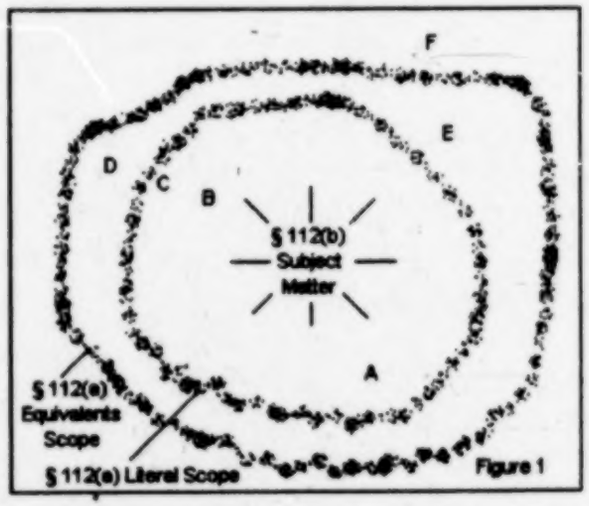

Figure 1

In the above figure, A, B, C, D, E, and F represent accused infringer elements, each positioned with respect to the § 112(a) scope. The above figure illustrates that the § 112(b) subject matter of a claim term by itself has no scope in its capacity as a member of a claim. This is consistent with the requirement that only the § 112(b) subject matter be placed within the claims. What truly sets the boundary of an inventor's federally protected property is the § 112(a) scope. While the § 112(b) subject matter may locate the subdivision of a claim term, it is the collective of the § 112(a)(1) description, § 112(a)(2) enablement, and § 112(a)(3) best mode requirements that provide the public notice of a lot boundary within which they may not enter without permission.

Importantly, the § 112(a) scope of an issued claim term is at its maximum on the filing date of its associated patent application. At that point in time, the inventor has articulated the § 112(a) literal scope of each claim term through the collective use of that term within the patent document, including the § 112(a)(1) description provided by the claims, abstract, title, background, figures, and detailed description section. Also as of the filing date, the scope of the doctrine of equivalents under § 112(a) is set as a function of the § 112(a) literal scope. This is to say, the degree to which the patent application drafter literally describes a claim term within the patent document provides the datum from which the § 112(a) equivalents scope may be referenced. Thus, even though the § 112(a) equivalents scope is not literally articulated within the patent document at the time of filing, the § 112(a) equivalents scope is a boundary to which the inventor is entitled (at least as of the time of filing).

It is well known that, with regard to a patent claim term, any unimportant and insubstantial change that is in existence as of the filing date or comes into existence after the filing

date of a patent application is included within the § 112(a) equivalents scope of that claim term for the life of the patent. To achieve this, § 112(a) doctrine of equivalents scope is evaluated at the time of infringement rather than measured at the time the patent was filed or was issued. *Warner-Jenkinson*, 520 U.S. at 37. Since the § 112(a) equivalents scope is set as a function of the § 112(a) literal scope as of the filing date of the issued patent, its subsequent evaluation at the time of infringement does not add additional § 112(a) scope to the § 112(b) subject matter after the filing date.

B. Rules of Evidence: Intrinsic and Extrinsic

With the above § 112(a) and § 112(b) structure in mind, it is important to have rules of evidence to bring evidence to or keep evidence from the legal meaning of a patent claim term. From those lines of cases that depend from *Vitronics Corp. v. Conceptronic, Inc.*, 90 F.3d 1576 (Fed. Cir. 1996), there appears to be a general consensus that the legal meaning of a patent claim term is derived through intrinsic evidence. To put it another way, intrinsic evidence is evidence that establishes the legal meaning of a claim term. However, case law is not clear as to what constitutes intrinsic evidence.

It is a proposition of this brief that intrinsic evidence is limited to the claims, the written and illustrative description, and any timely, relevant statements made by the patentee during prosecution. Under this proposed rule, intrinsic evidence is evidence within the § 154 patent document and the timely, relevant § 132(a) prosecution history as well as that which can be logically inferred from these documents.

It also is a proposition of this brief that extrinsic evidence be defined as evidence that is to be excluded from the legal meaning of a claim term. Extrinsic evidence is evidence that is not included in the claims, written specification, illustrative

specification, and timely, relevant statements made by the patentee during prosecution. Extrinsic evidence includes expert testimony and dictionary definitions. Under this proposed rule, extrinsic evidence is evidence that is external to the § 154 patent document and the § 132(a) prosecution history.

The Federal Circuit has summed up the significance of extrinsic evidence, as follows:

> [t]he claims, specification, and file history, rather than extrinsic evidence, constitute the public record of the patentee's claim, a record on which the public is entitled to rely. In other words, competitors are entitled to review the public record, apply the established rules of claim construction, ascertain the scope of the patentee's claimed invention and, thus, design around the claimed invention. Allowing the public record to be altered or changed by extrinsic evidence introduced at trial, such as expert testimony, would make this right meaningless.

Vitronics Corp., 90 F.3d at 1583 (citation omitted).

Under present patent practice, it is said that claim terms are to be given their ordinary and customary meaning as understood by one of ordinary skill in the art. *Id.* at 1582. Under this approach, the world appears as a bed of an unlimited number of oysters from which a patentee and alleged infringer may pick and choose evidence to give meaning to a claim term. Overtime, giving a patent claim term its ordinary and customary meaning has opened the door to discovery by permitting litigants to introduce documents external to the intrinsic evidence and to present extrinsic, battling expert testimony over whether a meaning qualitatively is."ordinary and accustomed" or "special."

In contrast to the above, federal law under § 112 puts the burden on the patentee to give legal meaning to each patent claim term within the patent document as of the time of filing the patent application. Under § 112(a), the patentee is under a duty to give scope to the § 112(b) subject matter of a claim term. In other words, since it is the patentee who is to give property that promotes the useful arts under U.S. CONST. ART. I, § 8, cl. 8, a court is not to give property to the patentee by giving claim terms their ordinary and customary meaning.

Without qualification, it is fair to say that a significant number of infringement cases come down to a dispute over the meaning of a claim term. Simply put, whichever party's definition of that claim term at issue is adopted by the court wins the litigation. Extrinsic evidence has come to play too great a role in this area. To diminish the role extrinsic evidence plays in patent claim construction, Amicus proposes the following heuristic technique.

C. The Role of Intrinsic and Extrinsic Evidence in Patent Claim Construction

In regards to the disputed claim term, the court first is to ask whether an element of the alleged infringer's product or process falls within or without the § 112(a) scope of the § 112(b) subject matter of the disputed claim term. This is similar to determining whether an individual is in or outside of a swimming pool. The individual will be surrounded by water if in the pool and surrounded by dry air if outside of the pool. Thus, it is not necessary to determine where the boundary of the pool is in determining whether an individual is in or outside of a swimming pool. Similarly, it is not necessary to determine where the boundary of the claim term scope is in determining whether an element of the alleged infringer's

product or process falls within or without the § 112(a) scope of the § 112(b) subject matter of the disputed claim term.

Next, in the context of an element of the alleged infringer's product or process, the court may assume a linguistic meaning for the patent claim term at issue whose scope would include the practiced element of the alleged infringer.[6] To aid the court in developing this linguistic meaning, intrinsic or extrinsic evidence may be used.

In view of this linguistic meaning of a patent claim term, the court will determine whether the patentee elevated this linguistic meaning to a legal meaning of the patent claim term at issue. To make this determination, the court may only use the intrinsic evidence in its analysis. In other words, the court may only support its conclusion in an issued opinion with intrinsic evidence. Thus, the analysis set out in the issued opinion is not to be supported by extrinsic evidence, including expert testimony, dictionary definitions, and learned treatises.

D. The Role of § 132(a) Prosecution History as Intrinsic Evidence

As asserted above, the § 112(a) scope of an issued claim term is at its maximum on the filing date of its associated patent application. Thus, statements made during prosecution by the patentee either maintain the original scope, reduce the original scope, or have no effect on the original of an issued claim term. Statements made during prosecution cannot enlarge the scope of an issued claim. The chronological order of the prosecution history statements play a part in each statement's effect on the § 112(a) scope of an issued claim.

---

[6] It thus becomes irrelevant as to whether the claim term meaning qualitatively is an "ordinary and accustomed" meaning or is a "special" meaning.

E. § 132(a) Prosecution History Estoppel

The § 112(a) scope of the § 112(b) subject matter of a claim term is at its broadest at the time the application is filed. During the prosecution of a patent, the actions of the patentee may reduce the § 112(a) scope of a claim term from that which the patentee originally gave at the time of filing. Under this view, § 132(a) prosecution history estoppel operates as a prima facie defense to patent infringement of the issued claims by reducing the claim scope prior to issue. Here, § 132(a) prosecution history estoppel operates to prevent a finding of patent infringement rather than a justification or excuse for patent infringement.

One of the main tasks now faced by this Court is a decision as to which actions by the patentee will reduce this scope. To aid in this, the above overview of patent claim construction permits development of figures to represent some of the possible choices in this regard.

Figure 1, reproduced below, illustrates a range of equivalents that is available when there is no claim amendment to create § 132(a) prosecution history estoppel. Accused infringer elements A, B, C, D, and E fall within the § 112(a) scope of the § 112(b) claimed subject matter and accused infringer element F falls without § 112(a) scope.

Like a bite from an apple, Figure 2 illustrates a complete bar to the localized range of equivalents available when a claim amendment creates § 132(a) prosecution history estoppel as proposed by the lower court. *See Festo*, 234 F.3d at 569. Here, accused infringer elements C and D would no longer be within the § 112(a) scope of the § 112(b) claimed subject matter due to § 132(a) estoppel. However, the doctrine of equivalents under § 112(a) would still capture the accused infringer element E.

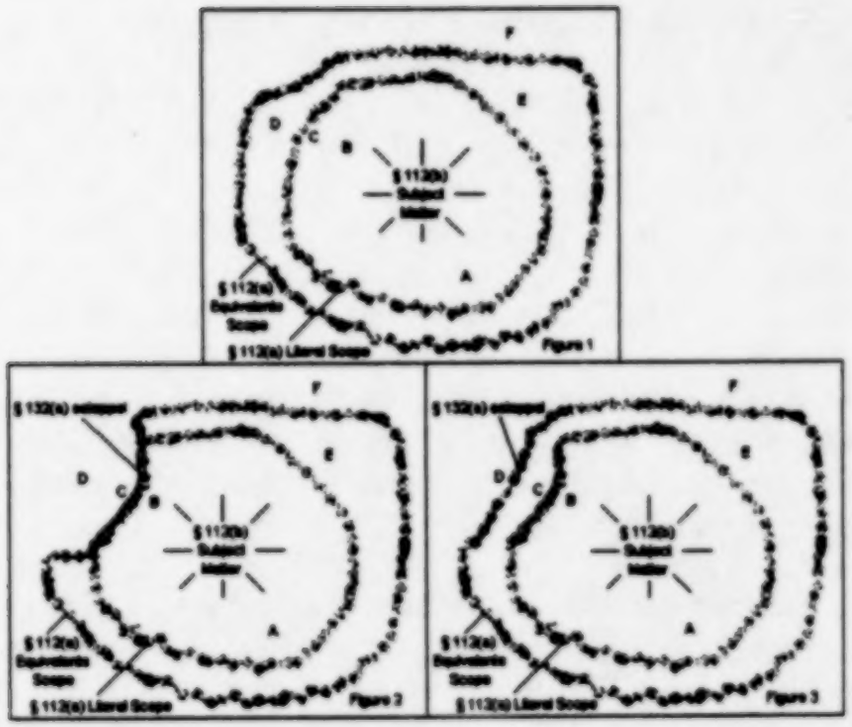

Figure 3 illustrates a flexible bar approach to the localized range of equivalents that is available when a claim amendment creates § 132(a) prosecution history estoppel. Here, the doctrine of equivalents under § 112(a) would capture the accused infringer element E. Moreover, the patent holder would still be entitled to the doctrine of equivalents to the extent the patent holder did not give up subject matter scope in exchange for a patent grant. Under this approach, accused infringer element C would be within the § 112(a) scope through the § 112(a) doctrine of equivalents (unlike in Figure 2). Accused infringer element D would fall outside of the § 112(a) scope due to § 132(a) estoppel, however.

As seen in Figure 2 and Figure 3, § 132(a) prosecution history estoppel only affects a localized area of the § 112(a) scope of the § 112(b) subject matter of a claim term. Thus, a

range of equivalents still is available for the § 112(a) scope of the § 112(b) subject matter of a claim term to capture the accused infringer element E, even under the Figure 2 complete bar proposed by the lower court.

1. Amicus Proposed Holding for the Court

In the absence of a reason for a claim amendment required by the PTO under 35 U.S.C. §§ 102, 103 during patent prosecution, the burden is on the patent holder to establish a reason for the claim amendment by a preponderance of the evidence at the time of issue. In the absence of a reason for a claim amendment not required by the PTO under 35 U.S.C. §§ 102, 103 during patent prosecution, the burden is on the alleged infringer to establish a reason for the claim amendment by a preponderance of the evidence at the time of infringement.

Intrinsic evidence is limited to the § 154 patent document and to the § 132(a) prosecution history and logical inferences that may be drawn from these documents. Extrinsic evidence is evidence that is external to the § 154 patent document and the § 132(a) prosecution history. The evidence an alleged infringer or a patentee may use to meet their burden is restricted to the intrinsic evidence. *Festo*, 234 F.3d at 586 n.6. Neither party may submit nor may the court receive extrinsic evidence such as dictionary definitions, expert testimony, or evidence produced by discovery to meet their burden.

The court then would decide whether a reason for the claim amendment at issue is established by a preponderance of the evidence. The reason for the claim amendment at issue must be related directly to the patentee giving up § 112(a) scope of the § 112(b) subject matter in response to the requirements under either § 102 or § 103 and in exchange for a patent grant.

Where a reason is established by a preponderance of the evidence, the court then would decide whether that reason justifies applying § 132(a) prosecution history estoppel. Where two or more reasons for the amendment are established by a preponderance of the evidence, the court would then decide which reason is the predominant reason for the amendment. The court then would decide whether that predominant reason justifies applying § 132(a) prosecution history estoppel. Each burden described above is subject to shifting if a reason is established by a preponderance of the evidence.

Where no reason is established by a preponderance of the evidence, the court should hold, as the case may be, that § 132(a) prosecution history estoppel applies since the patent applicant had a substantial reason related to patentability for varying the claim term by claim amendment required under § 102 or § 103 or that § 132(a) prosecution history estoppel does not apply since the patent applicant did not have a substantial reason related to patentability for varying the claim term by claim amendment required under § 102 or § 103.

In applying § 132(a) prosecution history estoppel, § 132(a) prosecution history estoppel is to be applied to the § 112(a) scope of the § 112(b) subject matter of the claim term varied by the claim amendment at issue. Moreover, § 132(a) prosecution history estoppel will operate as a complete bar to the localized range of § 112(a) equivalents scope as to that claim term in the context of determining whether an accused element falls within or without the § 112(a) scope of the § 112(b) subject matter of a disputed claim term.

The above described § 132(a) prosecution history estoppel gives proper deference to the role of the § 154 patent document and § 132(a) prosecution history in both

establishing the property rights of a patent holder and in providing public notice. Moreover, proper deference is given to the primacy of the PTO in ensuring that the claims allowed cover only the § 112(b) subject matter that is properly patentable in a proffered patent application. Applied in this fashion, § 132(a) prosecution history estoppel places § 112(a) doctrine of equivalents within the structure of the Patent Act and places reasonable limits on the doctrine.

2. Application of Above Holding to Stoll Claim 1

In a Response to the first Office Action, Festo/Stoll voluntarily amended the claims by rewriting claim 8/1 as issued claim 1 so as to include the limitation "wherein said driven member includes a cylindrical sleeve made of a magnetizable material" in issued claim 1. If the Stoll patent employed the term "the driven member" as a substitute for or a subset of the term "a driven assembly", then the rewriting of claim 8/1 as issued claim 1 would have narrowed the § 112(a) scope of the prior § 112(b) claim 1 term "a driven assembly." In the same Response, Festo/Stoll also voluntarily made two German patents of record. *Festo*, 234 F.3d at 583.

Given the above facts and assuming that the Festo/Stoll Response narrowed the § 112(a) scope of the prior § 112(b) claim 1 term "a driven assembly," it is possible that Festo/Stoll narrowed the prior § 112(b) claim term "a driven assembly" in view of the two German patents or other prior art of record at issue to preempt a § 102 or § 103 rejection and in exchange for the immediately following patent grant. If accused infringer SMC can establish that the predominant reason for the above Festo/Stoll amendment was related directly to Festo/Stoll giving up § 112(a) scope of the prior § 112(b) claim term "a driven assembly" in response to the requirements under either § 102 or § 103 in view of the prior

art of record at issue and in exchange for a patent grant, then the lower court should find that the amendment gives rise to § 132(a) prosecution history estoppel regarding the limitation "wherein said driven member includes a cylindrical sleeve made of a magnetizable material." Amicus proposes that the Court reverse and remand based on the above.

3. Application of Above Holding to Carroll Claim 9

Since it is each individual § 112(b) subject matter that has a § 112(a) scope and not the entire original claim, the lower court's statement that "the amendment narrowed the scope of the original claim," *Festo*, 234 F.3d at 589, is in error. Arguably, the Festo/Carroll amendment indirectly narrowed the § 112(a) scope of the prior § 112(b) claim term "a device." However, a more direct analysis asks whether Festo/Carroll narrowed the § 112(a) scope of the prior § 112(b) claim term "means for controlling." Since the lower court opinion neither address the § 112(a) doctrine of equivalents scope of "means for controlling" to determine whether the amendment narrowed the limitation "means for controlling," *see Id.*, nor the above § 132(a) prosecution history estoppel rule, Amicus proposes that the Court reverse and remand.

II. CONCLUSION

For the reasons stated, the judgment of the Court of Appeals for the Federal Circuit should be reversed.

Respectfully submitted,

VINCENT P. TASSINARI
Counsel of Record
3232 N. Halsted St., #D908
Chicago, IL 60657-3476
(773) 472-0316

AUG 29 2001

(22)

No. 00-1543

Supreme Court, U.S.
FILED
AUG 29 2001
OFFICE OF THE CLERK

In The

Supreme Court of the United States

FESTO CORP.,

Petitioner,

v.

SHOKETSU KINZOKU KOGYO KABUSHIKI CO., LTD., a/k/a SMC CORP., and SMC PNEUMATICS, INC.,

Respondents.

On Writ Of Certiorari To The United States Court Of Appeals For The Federal Circuit

BRIEF *AMICUS CURIAE* OF SEAN PATRICK SUITER IN SUPPORT OF NEITHER PARTY

SEAN PATRICK SUITER
14301 FNB Parkway, Suite 220
Omaha, Nebraska 68154
402.496.0300

COCKLE LAW BRIEF PRINTING CO., (800) 225-6964
OR CALL COLLECT (402) 342-2831

34 pp

TABLE OF CONTENTS

Page

Interest of *Amicus Curiae* 1

Jurisdictional Statement..... 1

Statement of Facts..... 2

Summary of Argument 2

Argument 2

I The Lower Court's Decision Should Be Reviewed to Determine Whether It Furthers the Purpose of the Patent System 3

II Competing Interests Should Be Balanced Against Each Other Only to the Extent Each Interest Furthers the Function of the Patent System 4

III The Court of Appeals Decision May Be Applied so as to Retain the Equitable Underpinnings of the Doctrine 14

A. History of the Doctrine 15

B. Purpose of the Doctrine 19

IV If Not Protected By "Wholesome Realism" of Reverse Equivalents, You Infringe? 24

Conclusion 25

TABLE OF AUTHORITIES

Page

CASES

Bonito Boats, Inc. v. Thunder Craft Boats, Inc., 489 U.S. 141 (1989) 8, 9

C. Van der Lely N.V. v. Bamfords Ltd., [1963] RPC 61 (H.L. 1962) 22

Clark v. Adie, (1873) (L.R. 10 Ch. 667) 23

Corning Glass Works v. Sumitomo Electric U.S.A., Inc., 868 F.2d 1251 (Fed. Cir. 1989) 17

Environmental Designs, Ltd. v. Union Oil Co., 713 F.2d 693 (Fed. Cir. 1983) 7

Festo Corp. v. SMC Corp., 234 F.3d 558 (Fed. Cir. 2000) 3, 10, 14, 17

Folsom v. Marsh, 9 F. Cas. 342 (C.C.D. Mass. 1841) 10

Goodyear Dental Vulcanite Co. v. Davis, 102 U.S. 222 (1880) 15

Graver Tank & Mfg. Co., v. Linde Air Prod. Co., 339 U.S. 605 (1950) 14, 15, 20, 21, 25

Green v. Higgans, 217 Kan. 217 (Kan. 1975) 21

Green v. Rich Iron Co., 944 F.2d 852 (Fed. Cir. 1991) 8

Hughes Aircraft Co. v. United States, 717 F.2d 1351 (Fed. Cir. 1983) 17

London v. Carson Pirie Scott & Co., 946 F.2d 153 (Fed. Cir. 1991) 18

Markman v. Westview Instruments, Inc., 517 U.S. 370 (1996) 6, 14

TABLE OF AUTHORITIES – Continued

Page

McGinley v. Franklin Sports, Inc., ___ F.3d ___, 2001 WL 939088 (Fed. Cir. 2001) 16, 17

Odiorne v. Winkley, 18 F. Cas. 581 (C.C.D. Mass. 1814) 15

Pennwalt Corp. v. Durand Wayland, Inc., 833 F.2d 931 (Fed. Cir. 1987) 17

Precision Instrument Mfg. Co. v. Automotive Maintenance Mach. Co., 324 U.S. 806 (1945) 4

Richdel, Inc. v. Sunspool Corp., 714 F.2d 1573 (Fed. Cir. 1983) 7

Sanitary Refrigerator Co. v. Winters, 280 U.S. 30 (1929) 20

Universal Oil Prods. Co. v. Globe Oil & Ref. Co., 322 U.S. 471 (1944) 8

Warner-Jenkinson Co., Inc. v. Hilton Davis Chem. Co., 520 U.S. 17 (1997) 8, 14, 17, 19, 20

Wilson Sporting Goods Co. v. David Geoffrey & Assoc., 904 F.2d 677 (Fed. Cir. 1990) 18

Winans v. Denmead, 56 U.S. 330 (1853) 15

CONSTITUTIONS AND STATUTES

Patent Act of 1836, ch. 357, 5 Stat. 117 (1836) 15

U.S. CONST. Art. I, § 8, cl. 8 ..... 3, 8

28 U.S.C. § 1295 3

35 U.S.C. § 101 16

35 U.S.C. § 102 6

TABLE OF AUTHORITIES – Continued

Page

35 U.S.C. § 103 ..... 6, 24

35 U.S.C. § 112 ..... 6, 16

35 U.S.C. § 287 22

MISCELLANEOUS

PROFESSOR POMEROY, EQUITY JURISPRUDENCE (5th ed. 1941) 4, 14, 23

M. J. Adelman, et al., CASES AND MATERIALS ON PATENT LAW, West Group (1998) 14, 23

Lewis Carroll, ALICE IN WONDERLAND AND THROUGH THE LOOKING GLASS, Signet Classics (Reissue 2000) 22

D.S. Chisum, et al., PRINCIPLES OF PATENT LAW, Foundation Press (2001) 14

Joseph S. Cianfrani, *An Economic Analysis of the Doctrine of Equivalents*, 1 Va. J.L & Tech. 1 (Spring 1997) 8

Mary S. Consalvi et al., *Objective Indicia of Equivalence and Nonequivalence: an Update*, 573 PLI/Pat. 171 (New York City, October 7-8, 1999) 8

H. Demsetz, *Toward a Theory of Property Rights*, 57 AMER. ECON. REV. 347 (1967) 9

R. Fenyman, SIX NOT-SO-EASY PIECES: EINSTEIN'S RELATIVITY, SYMMETRY, AND SPACE-TIME, Helix Books (1997) 7

TABLE OF AUTHORITIES – Continued

Page

Nicholas P. Godici, *Performance and Accountability Report: Fiscal Year 2000, http://www.popa.org/newsletters/arpmay01.shtml* 13

W. Gordon, *A Property Right in Self-Expression: Equality and Individualism in the Natural Law of Intellectual Property*, 102 YALE L.J. 1533 (1993) 9

J. Hughes, *The Philosophy of Intellectual Property*, 77 GEO. L. J. 287 (1988) 9

B. Franklin, *Letter to John Lining*, March 18, 1755, *http://www.bibliomania.com/2/9/77/124/21483/1.html* 25

J. Locke, SECOND TREATISE OF GOVERNMENT, (1690) 9

MANUAL OF PATENT EXAMINING PROCEDURE, Rev. 1, Feb. 2000 6

Roberta J. Morris, *Open Letter to the Supreme Court Concerning Patent Law*, 83 J. PAT. & TRADEMARK OFFICE SOC'Y 438 (2001) 11

A. Samuel Oddi, *Un-Unified Economic Theories of Patents*, 71 Notre Dame L. Rev. 267 (1996) 5

Patent Office Professional Association Website, April/May 2001 Newsletter, *http://www.uspto.gov/web/offices/com/annual/2000/00patents.pdf* 13

William C. Robinson, THE LAW OF PATENTS FOR USEFUL INVENTIONS, Vol. 1-3 (1890) 14

Bruce J. Rose, et al., *Was Festo Really Necessary*, 83 J. PAT. & TRADEMARK OFFICE SOC'Y 111 (Feb. 2001) 12

TABLE OF AUTHORITIES – Continued

Page

Voltaire, THE PHILOSOPHICAL DICTIONARY, (H.I. Woolfe, ed. & trans., Knopf 1924) 10

WRITINGS OF THOMAS JEFFERSON, 180-181, H.A. Washington Ed. (1854) 5

INTEREST OF *AMICUS CURIAE*[1]

This brief *amicus curiae* is submitted by Sean Patrick Suiter, pursuant to Rule 37 of the Rules of this Court. *Amicus Curiae* takes no position with respect to the holdings in the case under review by this Court, nor does he take a position with respect to the patent in question. Numerous briefs exploring the case precedent and issues are before this Court. *Amicus Curiae* does not wish to duplicate the work done by others. However, to establish a background of the issues to be resolved, *Amicus Curiae* requests the Court to consider the information contained herein.

Amicus Curiae is in position to provide the Court with this information. He is a patent attorney who handles many patent applications and prosecutions. *Amicus Curiae* respectfully submits this brief to provide the Court with possible historical and practical information to either affirm or reverse the Court of Appeals' decision.

JURISDICTIONAL STATEMENT

Amicus Curiae takes no position as to any jurisdictional statements contained in the Petitioner's or the Respondents' briefs.

---

[1] The parties have consented to the filing of this brief.

Counsel for a party did not author this brief in whole or in part. No person or entity, other than the *Amicus Curiae*, its members, or its counsel made a monetary contribution to the preparation and submission of this brief.

STATEMENT OF FACTS

Amicus Curiae takes no position as to any statements of fact contained in the Petitioners' or the Respondents' briefs.

SUMMARY OF ARGUMENT

The lower court's decision is consistent with a growing favoritism of public notice over other competing interests said to achieve patent system policy rationales. While such favoritism may obtain certain beneficial results, a more judicially rigorous application of the principles of equity may be required to harmonize the interests of those parties seeking to benefit from the United States Patent System ("Patent System").

ARGUMENT

The function of the Patent System is to promote technology for public good. None of the various competing interests said to further the stated purpose of the Patent System need be considered superior. The overriding principle of a court applying an equitable doctrine should be to perform equity.

I. THE LOWER COURT'S DECISION SHOULD BE REVIEWED TO DETERMINE WHETHER IT WILL FURTHER THE PURPOSE OF THE PATENT SYSTEM.

The Court should consider the public-policy rationale of the Patent System in reviewing the lower court's decision. In such a review the Court should determine whether the lower court's holding best "promote[s] the progress of science and the useful arts."[2]

The learned court below[3] held, "an amendment that *narrows* the scope of a claim for any reason related to the statutory requirements for a patent will give rise to prosecution history estoppel with respect to *the amended claim element*." *Festo Corp. v. Shoketsu Kinzoku Kogyo Kabushiki Co., Ltd.*, 234 F.3d 558, 563-64 (Fed. Cir. 2000), *cert. granted*, 69 U.S.L.W. 3779 (U.S. June 18, 2001) (No. 00-1543) (*emphasis added*).[4]

This holding provides a mechanism for fixing the relationship between the doctrine of equivalents and prosecution history estoppel. The mechanism favors

---

[2] U.S. CONST. art. I, § 8, cl. 8.

[3] The Federal Circuit is the sole arbiter of patent appeals from the district courts. 28 U.S.C. § 1295.

[4] Many commentators consider *Festo* to herald the end of the doctrine of equivalents. While the holding certainly reduces the scope of any amended claim—it does so only by removing equivalents for any claim *element* amended to overcome a statutory rejection. All other limitations (elements to the claimed combination) apparently retain a full range of equivalents.

notice and judicial economy over other competing interests.

II. COMPETING INTERESTS SHOULD BE BALANCED AGAINST EACH OTHER ONLY TO THE EXTENT EACH INTEREST FURTHERS THE FUNCTION OF THE PATENT SYSTEM.

Society abhors both monopolies[5] and forfeiture.[6] Thus, patents are only suffered to the extent necessary to prevent an inventor's forfeiture of his invention. Consequently, the Patent System must balance the interests of the public against the interests of inventors. The Patent System seeks to accomplish this goal by providing inventors with a limited right to exclude in exchange for public disclosure.

It should, at first be realized, that although the dissemination of knowledge, once known, is relatively free,[7]

---

[5] See, for example, *Precision Instrument Mfg. Co. v. Automotive Maintenence Mach. Co.*, 324 U.S. 806, 816 (1945).

[6] PROFESSOR POMEROY, EQUITY JURISPRUDENCE § 363 (5th ed. 1941).

[7] "If nature has made any one thing less susceptible than all others of exclusive property, it is the action of the thinking power called an idea, which an individual may exclusively possess as long as he keeps it to himself; but the moment it is divulged, it forces itself into the possession of every one, and the receiver cannot dispossess himself of it. Its peculiar character, too, is that no one possesses the less, because every other possesses the whole of it. He who receives an idea from me, receives instructions himself without lessening mine; as he who lights his taper at mine, receives light without darkening me. That ideas should freely spread from one to another over

an invention's value should neither be predicated on the ease by which knowledge of an invention may be shared, nor the ease by which the benefits of an invention may be reproduced. The Patent System must allow an invention to be valued in light of the reciprocal public gain derived from the invention.[8] This goal may not be obtained solely through market forces.

Courts should prefer rules providing predictable results at a reasonable cost to litigants. However, courts do not want copyists to exploit inventors since inventor satisfaction ultimately determines the availability and cost of technology.

The Patent Office's mandate, then, is to determine what is patentable. Such a determination requires the ability to ascertain the scope of an invention[9] at a low cost to inventors and the public. Inventors expect to be rewarded in a fashion reasonably related to the level of value consumers (the public) place on their invention. An invention may be defined as the difference between what has been disclosed (taught) by the inventor which was previously unknown and which was already known to

---

the globe, for the moral and mutual instruction of man, and improvement of his condition, seems to have been peculiarly and benevolently designed by nature." WRITINGS OF THOMAS JEFFERSON, 180-181, H.A. Washington Ed. (1854). President Jefferson was the first patent commissioner and a proponent of including patent rights in the Constitution.

[8] See, for example, A. Oddi, *Un-Unified Economic Theories of Patents*, 71 NOTRE DAME L. REV. 267, 277 (1996).

[9] THE INVENTION. See note 11 *supra*.

the public[10] (I = D – P, where *I* is the invention, *D* is the inventor's disclosure, and where *P* is the prior art).[11]

The Patent Office, in its *ex parte*[12] role or capacity, was not conceived or structured to fully balance the public-policy rationale behind the Patent System.[13]

---

[10] Brethren in the patent bar will recognize this as a simplification. Nonetheless it is accurate in all but extreme cases (not present here) and will be instructive in resolving controversies of this type.

[11] Of course the INVENTION (*I*) must meet the requirements of Title 35 of the United States Code, Title 37 of the Code of Federal Regulations, and may need to conform with certain practices of the USPTO (see the *Forward* to the Manual of Patent Examining Procedure ["MPEP"], Rev. 1, Feb. 2000, the third sentence). The INVENTION may neither include, for example, matter dedicated to the public (35 U.S.C. § 102), nor may the prior art include non-analogous art (35 U.S.C. § 103). The understanding of the INVENTION may also change with newly discovered prior art, and/or later discovered uses or extensions unknown in the prior art; (whether such later discovered uses or extensions flow from the INVENTION, or to the contrary are independent of, or non-obvious over, the original teaching may be a question of law according to a well-reasoned principle of *Markman v. Westview Instruments, Inc.*, 517 U.S. 370 (1996)).

[12] See MPEP 713.06 "No *Inter Partes* Question Discussed *Ex Parte*."

[13] Potential infringement and potential further improvement derived from the added teaching of a patent may only be considered in the abstract during prosecution in the Patent Office (there being no case or controversy with another party). Probably, the USPTO cannot even effectively warn (even *pro se*) applicants that amending in response to a rejection under 35 U.S.C. § 112, ¶ 2, for example, rather than appeal to the Board of Patent Appeals and Interferences, will result in loss of equitable protection under the doctrine of equivalents (see for example, alleged omission of essential cooperative relationships, MPEP ¶ 7.34.14, pages 700-34, Rev. 1, Feb. 2000).

Courts in *inter partes* proceedings are confronted by a controversy of competing interests which they are structured to resolve. Issues that require a determination of whether an accused infringer is tortiously benefitting from the natural proximate benefits arising from an inventor's invention must be left to courts. Likewise, courts are better suited to determine whether an accused infringer has really added to the art by extending new benefits to consumers through non-obvious improvements to another's invention (such innovation should also be rewarded).[14]

Inventors also want notice allowing them to cost-effectively determine what areas of a particular art may be the most fruitful (state of the art). Cumulative or duplicative endeavors may lead to expensive controversies that consume an invention's value.

Additionally, the public benefits from the disclosure of the invention. Such disclosure provides knowledge constructive in further technological advancements—this

---

[14] Everything is a combination of known elements. Even protons are combinations of quarks. See for example, R. Fenyman, SIX NOT-SO-EASY PIECES: EINSTEIN'S RELATIVITY, SYMMETRY, AND SPACE-TIME, Helix Books (1997). Note the following Federal Circuit statements, more cautious than the Nobel Laureate's: "Most, if not all, inventions are combinations and mostly of old elements." *Richdel, Inc. v. Sunspool Corp.*, 714 F.2d 1573, 1579-80, 219 U.S.P.Q. 8, 12 (Fed. Cir. 1983); and "[V]irtually all [inventions] are combinations of old elements." *Environmental Designs, Ltd. v. Union Oil Co.*, 713 F.2d 693, 698, 218 U.S.P.Q. 865, 870 (Fed. Cir. 1983).

both advances individual technologies and increases technology choices.

Various competing interests seek balance in inquiries regarding a patent system, these include: fostering invention,[15] promoting public disclosure,[16] rewarding inventors for inventions,[17] public notice,[18] judicial economy,[19] and economy within a patent office.[20] A result harmonizing these interests should be favored by the Court.

The public notice function of a public policy rationale for a patent system is critical to obtaining several desirable goals. These goals range from the fundamental

---

[15] *Bonito Boats, Inc. v. Thunder Craft Boats, Inc.*, 489 U.S. 141, 146 (1989). This goal is emphasized in the Constitutional grant of power to Congress "[t]o promote the Progress of Science and useful arts by securing for limited times to Authors and Inventors the exclusive Right to their respective Writings and Discoveries." U.S. CONST. art. I, § 8, cl. 8.

[16] *Universal Oil Prods. Co. v. Globe Oil & Ref. Co.*, 322 U.S. 471, 484 (1944).

[17] See note 8 *supra*. Without protection, the inventor may want to hoard his ideas since disclosure might result in financial exploitation and copying by others.

[18] *Warner-Jenkinson Company, Inc., v. Hilton Davis Chemical Co.*, 520 U.S. 17, 29 (1997).

[19] For an excellent chronology and analysis of pre-*Festo* doctrine of equivalence cases, see Mary S. Consalvi, et al., *Objective Indicia of Equivalence and Nonequivalence: an Update*, 573 PLI/Pat. 171(New York City, October 7-8, 1999). See also Joseph S. Cianfrani, *An Economic Analysis of the Doctrine of Equivalents*, 1 Va. J.L. & Tech. 1 (Spring 1997).

[20] Courts and the Patent Office sometimes have competing economies, see for example, *Green v. Rich Iron Co.*, 944 F.2d 852, 853 (Fed. Cir. 1991).

fairness required to assess liability against infringers, to the instructional framework disclosure provides for competitors to design around inventions. Thus, "the federal patent laws must determine not only what is protected, but also what is free for all to use." *Bonito Boats, Inc. v. Thunder Craft Boats, Inc.*[21] The metes and bounds of the patent should be clearly expressed to the public so they understand the limits of the patent claims. This allows competitors to compete with greater certainty so as to diminish the risk and cost associated with participating in a particular art. Notice is an important goal since the most efficient outcome in an economy is achieved through complete knowledge.[22]

Competing interests must be resolved in any controversy attempting to balance various parties' positions against the public policy rationale for the Patent System. For example, consumers (citizens) want to reward inventors for only what the inventor has invented. Consumers also desire the lower cost obtained through competition which also provides product and service enhancements.

Consumers' and inventors' interests compete in another significant way concerning the scope of a patent. Inventors want patents that extend to the natural[23]

---

[21] 489 U.S. at 151 (1989).

[22] H. Demsetz, *Toward a Theory of Property Rights*, 57 AMER. ECON. REV. 347 (1967).

[23] See for example, J. Locke, *Second Treatise of Government*, ¶ 27 (1690). Also of interest are: J. Hughes, *The Philosophy of Intellectual Property*, 77 GEO. L.J. 287 (1988); and W. Gordon, *A Property Right in Self-Expression: Equality and Individualism in the Natural Law of Intellectual Property*, 102 YALE L.J. 1533 (1993).

approximate benefits arising from their inventions. Consumers, on the other hand, want to limit this extension so as not to discourage others from making non-obvious combination improvements.

The sovereign, through the patent office and the courts, must first balance the competing interests of inventors and the public. A patent office seeks to provide the public with notice of what an invention is without unnecessarily increasing either the cost of technology to consumers or the cost of patenting to inventors. The Patent Office is, therefore, charged with assisting in fairly determining the scope of an invention in *ex parte* proceedings. The Patent Office may not be the best forum, in its capacity of establishing the scope of an invention (as the public's representative and advocate) to burden applicants and examiners with a rigid estoppel rule, particularly during what has largely been (pre-*Festo*) an intellectual pursuit of the scope of an invention. It seems probable, applicants and examiners, recognizing limitations in our ability to claim the metes and bounds of inventions,[24] may be more inclined to issue questionable

[24] Many have commented on the imperfect nature of language. "There is no complete language, no language which can express all our ideas. . . . all languages are, like us, imperfect." Voltaire, THE PHILOSOPHICAL DICTIONARY, (H.I. Woolfe, ed. & trans., Knopf) (1924). See also Justice Story's statement regarding copyright and patent cases as coming "nearer than any other class of cases belonging to forensic discussions, to what may be called the metaphysics of the law where the distinctions are, or at least may be, very subtile [sic] and refined, and, sometimes, almost evanescent." See *Folsom v. Marsh*, 9 F. Cas. 342, 344 (C.C.D. Mass. 1841).

patents, and applicants less willing to amend and more likely to appeal.[25]

The rule in *Festo* may further the public's interest in decreasing the cost of new inventions with increased competition due to more easily ascertainable patent scope (providing an enhanced ability to design around patents). Thus, the public will receive the natural inured benefit flowing from these new inventions. In addition, through the narrowed scope of claims the public may receive better notice of the exact limits of patents allowing the suggestion of other non-obvious inventions.

However, the rule in *Festo* may discourage inventors from inventing if the Patent System offers a perceived decreased protection for patents. Consumers may no longer receive the benefits of competition and new technology since inventors are no longer rewarded to the same perceived extent. This may result in less dissemination of knowledge to the public.[26]

The desire of inventors to obtain a reward for their inventions may be thwarted by the rule in *Festo*. An unscrupulous, would-be infringer may need only substitute an equivalent element recited in an amended claim in order to survive an allegation of infringement. Therefore, the inventor would not receive the anticipated reward for his invention even though the spirit of the

[25] Roberta J. Morris, *Open Letter to the Supreme Court Concerning Patent Law*, 83 J. PAT. & TRADEMARK OFF. SOC'Y 438, 441 (2001).

[26] Innovators being compelled to maintain their inventions as "trade secrets."

invention has not changed.[27] The public notice resulting from the rule in *Festo*, however, benefits the inventor. The rule provides the inventor with the ability to develop new inventions in response to consumer market demand with less concern about possible infringement. The rule provides notice to the inventor as to the limits of the amended patent claims without requiring a doctrine of equivalents analysis.

The inventor may also benefit from the rule in *Festo* by predictability in both the limits of patents and in litigation results. Under the *Festo* rule, inventors may not need a lengthy adjudication to determine claim equivalents and whether an accused infringer used equivalents (resulting in decreased expenses in enforcing a patent).

However the cost of patent prosecution may increase as a result of the rule in *Festo*. To avoid amendments, patent applicants will spend more time and money preparing claims and searching prior art. These increased costs may prevent small entities from pursuing patent protection, decreasing the amount of technology disseminated to the public.

The rule in *Festo* may be argued as improving judicial economy.[28] The Federal Circuit based its decision in *Festo* in part on the "unworkab[ility]" of the prior rule."[29] With

---

[27] Limits in the English language and its usage may prevent claims from fully comprehending the scope of an invention. See also note 23 *supra*.

[28] Bruce J. Rose, et al., *Was Festo Really Necessary*, 83 J. Pat. & Trademark Office Soc'y 111, 135 (Feb. 2001).

[29] 234 F.3d 558, 575.

better public notice as to the scope of patents, it would seem judicial economy would be enhanced. However, making decisions in an attempt to ameliorate the judiciary and Patent Office burden may only shift the burden in the Patent System. It is crucial other important policies behind the Patent System not be overcome by attempts to cure the practical problems within judicial and Patent Office "economies."[30]

Additionally, a bright line rule may only shift the burden to the government.[31] Applicants are already arguing and appealing examiner requests for amendments to avoid (automatic) prosecution history estoppel. The decision may greatly increase the time an examiner must spend on each patent application.[32] Due to the already large workload, increasing it would benefit neither the government nor the public.

While increased certainty and judicial economy are important goals, the result may not be economical. The rule may only shift the heavy burden placed on the judicial system to the Patent Office and prosecution—ultimately creating more cases for already crowded dockets.

---

[30] In that these bodies seek to achieve the correct result with the greatest efficiency.

[31] Increased taxes and/or user fees may result.

[32] 293,244 patent applications were submitted in 2000 to be examined by an average of 3000 patent examiners. (Nicholas P. Godici, *Performance and Accountability Report: Fiscal Year 2000* (visited July 6, 2001) *http://www.uspto.gov/web/offices/com/annual/2000/00patents.pdf*. Patent Office Professional Association Website, April/May 2001 Newsletter, (visited July 6, 2001) *http://www.popa.org/newsletters/aprmay01.shtml*.

In any case, the *Festo* rule may thwart the interest of both inventors and consumers and impede courts when a result dictated by equity may be unavailable as a result of the rigidity of the rule. Principles already exist for resolving the relative interests of the parties according to the public policy rationale (*Markman* [claim interpretation is a matter of law], *Warner-Jenkinson* [rebuttable presumption], *Graver Tank* [reverse doctrine of equivalents],[33] *Wilson Sporting Goods* [re-capture unavailable]; and *Penwalt* [all elements rule]).

III. THE COURT OF APPEALS DECISION MAY BE APPLIED SO AS TO RETAIN THE EQUITABLE UNDERPINNINGS OF THE DOCTRINE.

The judiciary created the doctrine of equivalents in equity in order to carry out the policies not satisfied by the rule of law.[34] This doctrine "regards as done which ought to be done"[35] by protecting the equivalents as well as literal claims.

---

[33] 339 U.S. 605 (1950). *Amicus Curiae* confesses an admiration for this decision. *Amicus* is most impressed by the principles found in *dicta* regarding the so called "reverse doctrine of equivalents." This principle seems pregnant with a solution for this type of controversy. This admiration is retained even with the criticism reported in M. J. Adelman, et al., CASES AND MATERIALS ON PATENT LAW, 897-900, West Group (1998). Note also the historicism found in D.S. Chisum, et al., PRINCIPLES OF PATENT LAW, 900-910, Foundation Press (2001).

[34] See in particular, Vol. 1, § 258, William C. Robinson, THE LAW OF PATENTS FOR USEFUL INVENTIONS, Vol. 1-3 (1890). This is perhaps the most scholarly work in the patent law.

[35] PROFESSOR POMEROY, EQUITY JURISPRUDENCE § 363, (5th ed. 1941).

A. HISTORY OF THE DOCTRINE.

The doctrine of equivalents has evolved over time. In one of the first applications of the doctrine, the court found infringement and used a "substantially like" test when comparing the invention to the accused device as a whole.[36] The court stressed the "[m]ere colorable alterations of a machine [we]re not sufficient . . . [to avoid infringement]."

The Patent Act of 1836 changed the patent process, formally requiring claims and an examination.[37] Under the 1836 Act, this Court established the doctrine of equivalents.[38] Despite the fact the accused device did not literally infringe, this Court found infringement under "the doctrine of equivalents" because the claim language simply referred to a single embodiment as an example of what the patentee intended to claim. In 1880, this Court further defined the protection the doctrine of equivalents provided patentees.[39] The Court "conceded the patentee is protected against equivalents for any part of his invention."[40] However, the Court also used prosecution history estoppel to prevent the patentee from arguing an interpretation of the claim denied during prosecution.

The landmark decision in *Graver Tank & Mfg. Co. v. Linde Air Products Co.*[41] proposed the tripartite test used

---

[36] *Odiorne v. Winkley*, 18 F. Cas. 581, 582 (C.C.D. Mass. 1814).

[37] Patent Act of 1836, ch. 357, 5 Stat. 117, 119 (1836).

[38] *Winans v. Denmead*, 56 U.S. 330 (1853).

[39] *Goodyear Dental Vulcanite Co. v. Davis*, 102 U.S. 222 (1880).

[40] *Id.* at 230.

[41] 339 U.S. 605 (1950).

prior to the lower court's decision in *Festo*. This Court held: "[w]hat constitutes equivalency must be determined against the context of the patent, the prior art, and the particular circumstances of the case."[42] The court reiterated the test to be whether an accused "device"[43] performs substantially the same function in substantially the same way to obtain the same result.

The Patent Act of 1952 required an applicant to "definitely and particularly point out what the applicant claims as his invention." 35 U.S.C. § 112. In addition, the Act allowed claims to be written in mean-plus-function language.[44]

---

[42] This Court had held here that a finding of equivalence was a finding of fact.

[43] "Device" is used here and elsewhere to include any statutory subject matter. "[A]ny new and useful process, machine, manufacture, or composition of matter, or any new and useful improvement thereof. . . . " 35 U.S.C. § 101.

[44] See *McGinley v. Franklin Sports, Inc.*, ___ F.3d ___, 2001 WL 939088 (Fed. Cir. 2001). In *McGinley* the Federal Circuit broadened the range of equivalents available under 35 U.S.C. § 112, ¶ 6 where means-plus-function claiming is utilized. The new range apparently includes all equivalents—including those equivalents implied in the patent specification. Thus, the Federal Circuit may be working to structure its decisions, relating to the "doctrine of equivalents" and "equivalents" under means-plus-function claiming, directly to 35 U.S.C. § 112. For example, 35 U.S.C. § 112, ¶ 2 requires "one or more claims particularly pointing out and distinctly claiming the subject matter the applicant regards as his invention." Conversely, 35 U.S.C. § 112, ¶ 6 provides: "An element in a claim for a combination may be expressed as a means or step for performing a specified function without the recital of structure, material, or acts in support thereof, and such claim shall be construed to cover the corresponding structure, material, or acts described in the specification *and equivalents thereof.*" (Emphasis added). Thus, under these two cases (*Festo* and *McGinley*) a range of equivalents is available to applicants utilizing means-plus-function claiming when they are not estopped from asserting a particular claim interpretation.

In *Hughes Aircraft Co. v. United States,*[45] for the first time, the court addressed the range of equivalents available when prosecution history estoppel applied. The Federal Court applied a flexible bar, stating that prosecution history estoppel may have a limiting effect on the range of equivalents available. The court also concluded that the doctrine of prosecution history estoppel precludes a patent owner from obtaining a claim construction which resurrects subject matter surrendered during prosecution.

Pennwalt Corp. v. Durand Wayland, Inc.[46] dramatically changed the test for the doctrine of equivalents. The test articulated in *Graver* was an element-by-element analysis of the claims. Here the Federal Circuit adopted the so-called all-elements rule finding the accused device did not perform a function of the patent.[47]

Corning Glass Works v. Sumitomo Electric U.S.A., Inc.[48] held an accused device must contain every limitation (element) of the patent before the doctrine of equivalents would apply.[49]

---

[45] 717 F.2d 1351 (Fed. Cir. 1983).

[46] 833 F.2d 931 (Fed. Cir. 1987).

[47] Continuously locating the position of fruit.

[48] 868 F.2d 1251, 1258-59 (Fed. Cir. 1989).

[49] This approach was derived by the late Judge Nies through an analysis of this Court's precedent. This Court adopted the language of Judge Nies in *Warner-Jenkinson*.

The doctrine of equivalents was limited further by *Wilson Sporting Goods Co. v. David Geoffrey & Associates*,[50] which held equivalent elements within a claim could not produce a teaching encompassing an invention in the prior art. If an equivalent would not have overcome the prior art during prosecution, the doctrine of equivalents could not be utilized in litigation to re-capture the prior art.

In 1991, *London v. Carson Pirie Scott & Co.*[51] illustrated the Federal Circuit's concern that the doctrine of equivalents might be utilized to undermine the notice function of patent claims (in *dicta*). The Federal Circuit stated:

> [a]pplication of the doctrine of equivalents is the exception, however, not the rule, for if the public comes to believe (or fear) that the language of patent claims can never be relied on, and that the doctrine of equivalents is simply the second prong of every infringement charge, regularly available to extend protection beyond the scope of the claims, then claims will cease to serve their intended purpose. Competitors will never know whether their actions infringe a granted patent.

The court held the patent was not infringed because the case is one in which "the claims mean what they say." The claims may not extend to cover an accused device which does not copy the claim limitations (or elements).

---

[50] 904 F.2d 677 (Fed. Cir. 1990).

[51] 946 F.2d 1534, 1538 (Fed. Cir. 1991).

Warner-Jenkinson Co. v. Hilton Davis Chem. Co.,[52] established a new rule for amendments where no reason is given for the claim amendment. The basic test remained the same, an element-by-element analysis. However, the rule established a rebuttable presumption that prosecution history estoppel bars equivalents when no reason was given for the amendment. This Court held a presumption of estoppel is created which a patentee may rebut by showing a claim was amended for reasons other than for patentability purposes:

> The presumption we have described, one subject to rebuttal if an appropriate reason for a required amendment is established, gives proper deference to the role of claims in defining an invention and providing public notice, and to the primacy of the PTO in ensuring that the claims allowed cover the only subject matter that is properly patentable. Applied in this fashion, prosecution history estoppel places reasonable limits on the doctrine of equivalents, and further insulates the doctrine from any feared conflict with the Patent Act.

B. PURPOSE OF THE DOCTRINE.

Finding that an equivalent actually embodies the same invention, the doctrine prevents copyists from making minor changes to a patent, within the spirit of an invention. This Court stated, "[a] limitation to copying every literal detail of an invention would leave room for —indeed encourage—the unscrupulous copyist to make

---

[52] 520 U.S. 17, 33-34 (1997).

unimportant and insubstantial changes and substitutions in the patent which, though adding nothing would be enough to take the copied matter outside the claim, and hence outside the reach of law."[53] Thus, the ability to merely make insubstantial changes, and not infringe, is contrary to the equitable basis for the doctrine of equivalents.[54]

Prior to the lower court's decision in *Festo*, the judicial system applied a tripartite test to determine if an accused device infringed under the doctrine of equivalents: "[d]oes it perform substantially the same function in substantially the same way to obtain substantially the same result."[55] However, recently the Court has expressed concern about the doctrine, stating, "there can be no denying that the doctrine of equivalents, when applied broadly, conflicts with the definitional and public-notice functions of the statutory claiming requirement."[56]

The lower court's holding may still maintain certain equitable characteristics based on reasons or maxims for "doing equity." Two maxims of equity support an argument for a complete bar in equity: "he who comes into

---

[53] *Graver Tank v. Linde Air Products Co.* 339 U.S. 605, 606 (1950).

[54] Perhaps more clearly "outside the reach of the patent statutes and the equitable principles of the doctrine of equivalents."

[55] *Graver Tank*, 339 U.S. at 608 (citing, *Sanitary Refrigerator Co. v. Winters*, 280 U.S. 30, 42 (1929)).

[56] *Warner-Jenkinson Co., Inc. v. Hilton Davis Chemical Co.*, 520 U.S. 17, 29 (1997).

equity must come with clean hands, and he who seeks equity must do equity."[57] The Supreme Court of Kansas held in *Green v. Higgans*[58] "[t]he clean hands doctrine in substance provides that no person can obtain affirmative relief in equity with respect to a transaction in which he has himself, been guilty of inequitable conduct."

The parties involved in a patent application may be guilty of coming to equity with unclean hands. Claiming an invention such that an amendment of the claims is required during prosecution may be argued as making the applicant's hands unclean. However, claim rejections may be inappropriate and amendments may be made which are not necessarily the result of an attempted fraud by the applicant—nor indicating a change in position by the applicant requiring estoppel. For example, an applicant may not be aware of certain art prior to prosecution. Likewise, the Patent Office may obtain an improved understanding of the scope of an invention through an amendment (not necessarily limiting) made during prosecution. In neither case would the application of equity be offended nor would estoppel fairly result.

On the other hand, the lower court's rule may work a complete rejection of the equitable basis for the doctrine of equivalents. This Court has stated, "[t]he essence of the doctrine [of equivalents] is that one may not practice a fraud on a patent."[59] Merely by way of an amendment,

---

[57] PROFESSOR POMEROY, EQUITY JURISPRUDENCE § 363 (5th ed. 1941).

[58] 217 Kan. 217 at 217 (1975).

[59] *Graver Tank*, 339 U.S. at 606 (addition for clarity).

the lower court's rule may result in finding non-infringement for otherwise infringing technology. Worse still, a result might be obtained where the accused infringer had constructive notice of the scope of the claimed invention. The fact an inventor has amended claims does not alter whether an accused infringer is practicing an inventor's "invention."[60] Additionally, both actual and constructive notice of the scope of an invention may exist under the law.[61] While actual notice of an invention's scope is implied through the claims,[62] constructive notice of an invention's scope may be ascertained as a matter of law.[63] At bottom, the doctrine of equivalents recognizes an accused infringer may technically avoid infringement of a patent claim while still "infringing" the INVENTION.[64]

---

[60] "Well! I've often seen a cat without a grin," thought Alice; "but a grin without a cat! It's the most curious thing I ever saw in all my life!" Lewis Carroll, *Alice in Wonderland and Through the Looking Glass*, Signet Classics (Reissue 2000). "[C]at" = invention; and "grin" = patent.

[61] Notice may be implied. See for example, note 63 *infra*.

[62] 35 U.S.C. § 287(a).

[63] Would a reasonable competitor having ordinary skill in the art understand the scope of the INVENTION disclosed by the patentee?

[64] See *C. Van der Lely N.V. v. Bamfords Ltd.*, [1963] RPC 61 (H.L. 1962), wherein the British House of Lords found:

> Copying an invention by taking its "pith and marrow" without textual infringement of the patent is an old and familiar abuse which the law has never been powerless to prevent. It may be that in doing so there is some illogicality, but our law has always preferred good sense to strict logic. The illogicality arises in this way. On the one hand the patentee is tied strictly to the invention which he claims and the

In addition to allowing a potential fraud on patents, under the lower court's rule, an inventor might be forced to forfeit certain rights to their invention. "Equity abhors forfeiture."[65] Under the lower court's rule, regardless of the reason for a claim amendment (so long as the basis for the rejection was statutory), the inventor may forfeit the equivalents to which he "might" otherwise be entitled. It may be argued a patent's value should flow from its disclosure and the benefit directly obtained by the public.

> mode of effecting an improvement which he says is his invention. Logically, it would seem to follow that if another person is ingenious enough to effect that improvement by a slightly different method he will not infringe. But it has long been recognized that there "may be an essence or substance of the invention underlying the mere accident of form; and that invention, like every other invention, may be pirated by a theft in a disguised or mutilated form, and it will be in every case a question of fact whether the alleged piracy is the same in substance and effect, or is a substantially new or different combination."

(Per James, L.J., in *Clark v. Adie* (1873) L.R. 10 Ch. 667.) As cited in M. J. Adelman, et al., CASES AND MATERIALS ON PATENT LAW, 890, West Group (1998). Perhaps such an inquiry should be a question of law or a mixed question of law and fact.

[65] PROFESSOR POMEROY, EQUITY JURISPRUDENCE § 363, (5th ed. 1941).

IV. IF NOT PROTECTED BY "WHOLESOME REALISM" OF REVERSE EQUIVALENTS, YOU INFRINGE?

Or is an analysis under 35 U.S.C. § 103 really different from a determination under the doctrine of equivalents.

Controversies of this type are difficult. Benjamin Franklin, one of our earliest and most prolific inventors, once wrote:

> There are everywhere a number of people, who being totally destitute of any inventive faculty themselves, do not readily conceive that others may possess it; they think of inventions as miracles; there might be such formerly, but they are ceased. With these, every one who offers a new invention is deemed a pretender. . . . They are confirmed, too, in these sentiments, by frequent instances of pretensions to intervention, which vanity is daily producing. That vanity, too, though an incitement to invention, is, at the same time, the pest of inventors. Jealousy and envy deny the merit of the novelty of your invention; but vanity, when the novelty and merit are established, claims it for its own. The smaller your invention is, the more mortification you receive in having the credit of it disputed with you by a rival, whom the jealousy and envy of others are ready to support against you, at least so far as to make the point doubtful. It is not in itself of importance enough for dispute; no one would think your proofs and reasons worth their attention; and yet, if you do not dispute the point, and demonstrate your right, you not only lose the credit of being in that instance *ingenious*, but you suffer the disgrace of not being *ingenious*; not only of being a plagiary, but of being plagiary for trifles. Had the invention been greater, it would have disgraced you less; for men have not so contemptible an idea of him that robs for gold on the highway, as of him that can pick pockets for half-pence or farthings. . . . One would not, therefore, of all faculties or qualities of mind, wish, for friend or a child, that he should have that of invention.[66]

The judiciary has a broad range of tools available to resolve conflicts such as these. None of which seems a more useful starting point than the reverse doctrine. In *Graver Tank* this court stated:

> The *wholesome realism* of this doctrine [of equivalents] is not always applied in favor of a patentee but is sometimes used against him. Thus, where a device is so far changed in principle from a patented article that it performs the same or similar function in a substantially different way, but nevertheless falls within the literal words of the claim, the doctrine of equivalents may be used to restrict the claim and defeat the patentee's action for infringement.[67] (Emphasis added).

CONCLUSION

The Federal Circuit weighed considerations in a fashion designed to balance the needs of the Patent System. It

---

[66] Letter to John Lining, March 18, 1755. *http://www.bibliomania.com/2/9/77/124/21483/1.html*. Visited on August 25, 2001.

[67] 339 U.S. at 609.

may be argued since both the public and inventors are favored by considerations of cost and notice these factors should be superior.[68] However, such weighing may not always provide an equitable result. Perhaps the need to achieve consistent correct results prevents the use of bright line rules in controversies such as these.

Respectfully submitted,

Sean Patrick Suiter
14301 FNB Parkway, Suite 220
Omaha, Nebraska 68154
402.496.0300
sps@suiter.com

[68] Kindly note *Amicus Curiae*'s attached figure on page 27.

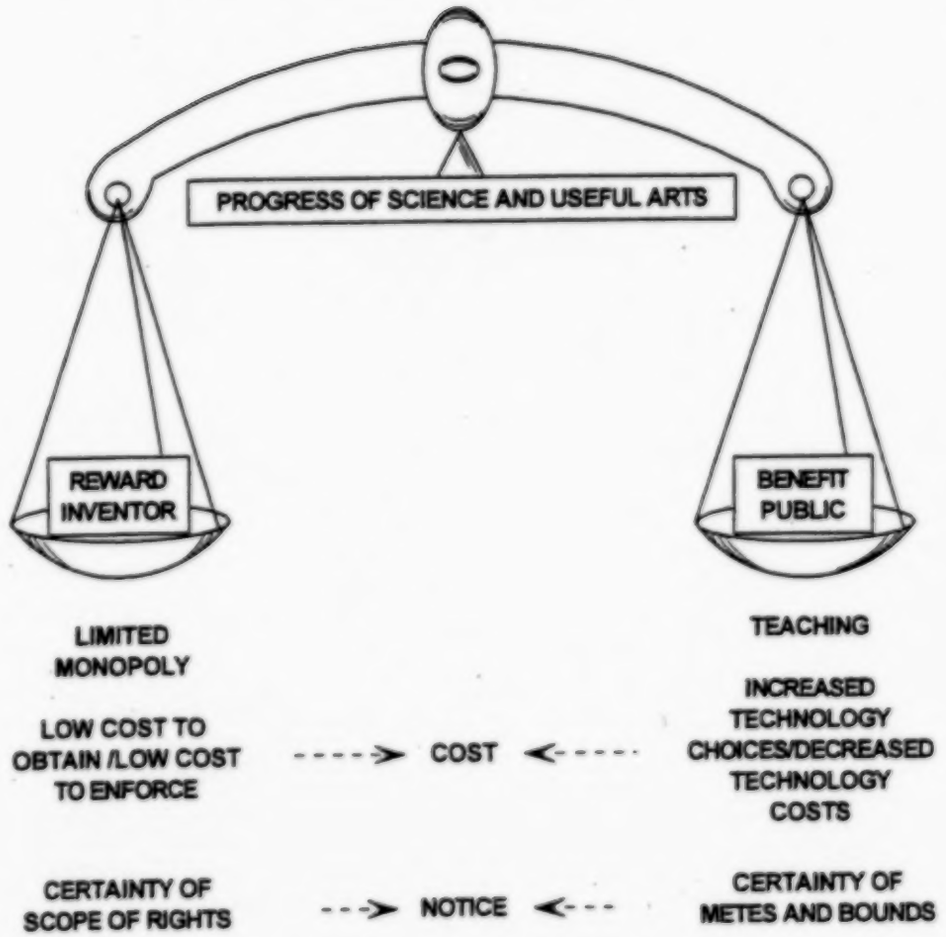

(23)

No. 00-1543

Supreme Court, U.S.
FILED
AUG 30 2001

AUG 30 2001

IN THE

Supreme Court of the United States

FESTO CORPORATION,

Petitioner,

—v.—

SHOKETSU KINZOKU KOGYO KABUSHIKI CO., LTD.,
a/k/a SMC CORPORATION AND SMC PNEUMATICS, INC.,

Respondents.

ON WRIT OF CERTIORARI TO THE UNITED STATES
COURT OF APPEALS FOR THE FEDERAL CIRCUIT

BRIEF OF AMICUS CURIAE FÉDÉRATION INTERNATIONALE DES CONSEILS EN PROPRIÉTÉ INDUSTRIELLE IN SUPPORT OF PETITIONER

R. DANNY HUNTINGTON
RAYMOND C. STEWART
JOHN P. SUTTON
TIPTON D. JENNINGS IV

Fédération Internationale Des Conseils En Propriété Industrielle

MAXIM H. WALDBAUM
Counsel of Record
LORI D. GREENDORFER
SALANS HERTZFELD HEILBRONN CHRISTY & VIENER
620 Fifth Avenue
New York, New York 10020
(212) 632-5500

Counsel for Amicus Fédération Internationale Des Conseils En Propriété Industrielle

August 30, 2001

64 pp

QUESTIONS PRESENTED

1. Whether the Federal Circuit in *Festo Corporation v. Shoketsu Kinzoku Kogyo Kabushiki Co., LTD., a/k/a SMC Corporation, and SMC Pneumatics, Inc.*, 234 F.3d 558, 574 (Fed. Cir. 2000), *cert. granted*, 121 S. Ct. 2519 (2001) (hereinafter, "*Festo*"), acted contrary to the long-standing and settled precedent of this Court and the teachings of prior Federal Circuit decisions, contrary to public policy, and beyond its authority, by holding that prosecution history estoppel imposes a complete bar on the doctrine of equivalents in a lawsuit for patent infringement whenever an amendment to a patent claim has narrowed the scope of such claim for a reason "related to 'patentability'" (as such term is broadly defined by the *Festo* court) (hereinafter referred to as "the Complete Bar Rule")?

2. Whether the impact of the Complete Bar Rule on a patentee's intellectual property rights, the United States Patent and Trademark Office, the obligations of the U.S. under international treaties, and technological innovation on a national and global scale, requires a reversal of *Festo* and a return to the Supreme Court's holding, in *Warner-Jenkinson Company, Inc. v. Hilton-Davis Chemical Co.*, 520 U.S. 17 (1997), that there is a flexible bar to the doctrine of equivalents even where a patent claim is narrowed in scope during prosecution of the patent?

TABLE OF CONTENTS

Page

Interest Of The Amicus Curiae 1

Summary Of The Argument 3

Argument 4

A. Background 4

B. *Festo* Should Be Reversed On the Grounds That The Complete Bar Rule Will Harm Innovation and Global Intellectual Property Protection And Will Create An Armageddon For Patent Values 9

C. *Festo* Should Be Reversed On The Ground That The Complete Bar Rule is Unworkable 16

D. *Festo* Should Be Reversed On The Grounds That The Complete Bar Rule Is Contrary To This Court's Precedent And An Unprincipled Departure From Federal Circuit Law 25

Conclusion 28

TABLE OF AUTHORITIES

CASES

Aclara Biosciences, Inc. v. Caliper Tech. Corp.,
125 F. Supp. 2d 391 (N.D. Cal. 2000) 19-21

Autogiro Co. of Am. v. United States,
384 F.2d 391 (Ct. Cl. 1967) 6, 17

Black & Decker, Inc. v. Hoover Serv. Ctr.,
886 F.2d 1285 (Fed. Cir. 1989),
abrogated by Festo Corp. v. Shoketsu Kinzoku Kogyo Kabushiki Co.,
234 F.3d 558 (Fed. Cir. 2000), *cert. granted*,
121 S. Ct. 2519 (2001) 6

Control Resources, Inc. v. Delta Elecs., Inc.,
133 F. Supp. 2d 121 (D. Mass. 2001) 23

Creo Prods. Inc. v. Presstek, Inc.,
No. C.A. 99-525-GMS, 2001 WL 637397
(D. Del. May 11, 2001) 18-20

Festo Corp. v. Shoketsu Kinzoku Kogyo Kabushiki Co.,
234 F.3d 558 (Fed. Cir. 2000), *cert. granted*,
121 S. Ct. 2519 (2001) ..... *passim*

Georgia-Pacific Corp. v. United States Plywood Corp.,
318 F. Supp. 1116 (S.D.N.Y. 1970),
modified on other grounds,
446 F.2d 295 (2d Cir. 1971) 22

Graver Tank & Mfg. Co. v. Linde Air Prods. Co.,
339 U.S. 605 (1950) .....*passim*
Hilton Davis Chem. Co. v. Warner-Jenkinson Co.,
62 F.3d 1512 (Fed. Cir. 1995),
rev'd on other grounds,
520 U.S. 17 (1997) 14
Hoechst Celanese Corp. v. BP Chems. Ltd.,
78 F.3d 1575, 1578-81 (Fed. Cir. 1996) 17
Hughes Aircraft Co. v. United States,
717 F.2d 1351 (Fed. Cir. 1983),
overruled by Festo Corp. v. Shoketsu Kinzoku Kogyo Kabushiki Co.,
234 F.3d 558 (Fed. Cir. 2000), *cert. granted*,
121 S. Ct. 2519 (2001) 6
Mycogen Plant Science, Inc. v. Monsanto Co.,
Civ No. 00-1127, 2001 WL 910389
(Fed. Cir. Aug. 14, 2001)..... 21
Polaroid Corp. v. Polarad Elecs. Corp.,
287 F.2d 492 (2d Cir. 1961)..... 22
Read Corp. v. Portec, 970 F.2d 816
(Fed. Cir. 1992)..... 22
Warner-Jenkinson Co. v. Hilton-Davis Chem. Co.,
520 U.S. 17 (1997) .....*passim*
Wilson Sporting Goods Co. v. David Geoffrey & Assocs., 904 F.2d 677 (Fed. Cir. 1990)..... 5, 6

STATUTES, RULES AND CONSTITUTIONAL PROVISIONS

35 U.S.C. § 101 5
35 U.S.C. § 102 ..... 5, 6
35 U.S.C. § 103 5
35 U.S.C. § 112 5
35 U.S.C. § 154 5
35 U.S.C. § 271 5
35 U.S.C. § 284 22
U.S. Const., art. I, § 8, cl. 8 4
Sup. Ct. Rule 37 1

MISCELLANEOUS

About WIPO, at http://www.wipo.org./about-wipo/en/.html. 2
Act Revising the Convention on the Grant of European Patents Nov. 29, 2000,
Protocols Art. 2 15
Agreement on Trade-Related Aspects of Intellectual Property Rights,
April 15, 1994, 33 I.L.M. 81 .....*passim*
Sheila F. Anthony, *Antitrust and Intellectual Property Law: From Adversaries to Partners*,
28 AIPLA Q.J. 1 (Winter 2000) 10

David Bannerman & Chris Hamer, "*Different Approaches to the "Doctrine of Equivalents" in Germany, UK, US and Japan"*
AIPPI Journal 82 (Mar. 2000) 14

Brief for the United States as *Amicus Curiae*, 1996 WL 172221 (U.S. Apr. 11, 1996) 14, 15

Center For Advanced Study On Intellectual Property, The University of Washington School of Law, *Comments For Issues* (2001), at http://www.uspto.gov/weboffices /dcom/olia/ harmonization 12, 13

European Patent Convention Art. 69, Oct. 5, 1973.....14, 15

Petition for Writ of Certiorari of Festo Corporation (U.S. Apr. 9, 2001).....7, 17, 26

Request for Comments On the International Effort to Harmonize the Substantive Requirements of Patent Laws, 66 Fed. Reg. 15409 (Mar. 19, 2001) 16

INTEREST OF THE AMICUS CURIAE

Fédération Internationale Des Conseils En Propriété Industrielle ("FICPI") respectfully submits this brief, as amicus curiae, in support of Petitioner Festo Corporation.[1] FICPI supports reversal of that portion of the decision in *Festo Corp. v. Shoketsu Kinzoku Kogyo Kabushiki Co.*, 234 F.3d 558, 574 (Fed. Cir. 2000), *cert. granted*, 121 S. Ct. 2519 (2001) (hereinafter, "*Festo*"), which held that prosecution history estoppel imposes a complete bar on the doctrine of equivalents in a patent infringement lawsuit whenever a claim amendment has narrowed the scope of such claim for a "reason related to patentability" (hereinafter referred to as "the Complete Bar Rule"). FICPI otherwise takes no position on the merits of the case.

FICPI, established in 1906, is a Switzerland-based international and non-political association of approximately 4,000 intellectual property attorneys from over seventy countries (including the U.S.). FICPI's members represent individual inventors as well as large, medium and small companies. One of the members' major roles is to advise inventors in

---

[1]FICPI has received letters of consent from counsel of record for all parties pursuant to Sup. Ct. R. 37.3, as submitted herewith. FICPI states, pursuant to Sup. Ct. R. 37.6, that counsel for the parties did not author any portion of this brief, and that FICPI received no "monetary contribution to the preparation or submission of the brief" from any person or entity, other than FICPI. The contents of this brief solely represent the views of FICPI and not any of its individual members.

intellectual property matters and secure protection for industrial innovation. FICPI supports the uniform global protection of patents, and the interests of inventors and the United States Patent and Trademark Office ("the PTO") in a fair scope of patent protection.

FICPI is one of only two major world organizations that advise the World Intellectual Property Organization ("WIPO"), an intergovernmental organization, on all intellectual property matters. In this capacity, it has attended Diplomatic Conferences concerning international intellectual property treaties and practices. WIPO is dedicated to promoting and protecting intellectual property rights worldwide. Its 177 member states (including the U.S.) comprise almost 90% of the world's countries. *See About WIPO*, at http://www.wipo.org./about-wipo/en/.html. As one of the United Nations' sixteen specialized agencies, WIPO administers intellectual property matters recognized by the U.N.'s member states and 21 international treaties concerning intellectual property. *See id.* The U.S. is a member of the WIPO Standing Committee on the Law of Patents ("SCP") and is involved with WIPO's efforts to harmonize substantive patent law worldwide.

FICPI's members rely on the doctrine of equivalents in drafting patent language, and in advising clients involved in patent infringement lawsuits and licensing transactions. Because many of its members are foreign practitioners, and because of its role as a WIPO advisor, FICPI has a unique perspective on the global impact of the Complete Bar Rule. First, the rule deters domestic and foreign inventors from publicly disclosing the attributes of

their inventions, instead encouraging trade secret protection. Alternatively, if inventors do decide to seek patent protection for their inventions, they are less likely to seek protection in the U.S., and therefore the invention is less likely to enter the U.S. market.

Second, the rule devalues the majority of the 1.2 million unexpired U.S. patents, thus decreasing their licensing value to domestic and foreign residents. Third, the message conveyed by *Festo* is that the Federal Circuit can replace Congress' role, and reverse over a century of precedent with an unprincipled decision that dramatically impacts patentees' vested rights on a global scale and has far-reaching negative legal and economic consequences to inventors worldwide. This sends a message to the international community that U.S. patent law is subject to sudden, sweeping changes, and operates as a disincentive to file patent applications in the U.S. because of the perceived volatility in U.S. patent law.

This message is inconsistent with the United States' status as a world leader in technology, its interest in stimulating and encouraging technological innovation, and its commitment to the goal of global harmonization of patent laws. FICPI thus urges this Court to reverse that portion of the *Festo* decision that established the Complete Bar Rule.

SUMMARY OF THE ARGUMENT

The American patent system is founded upon the interest in encouraging the creation of, and investment in, innovative technology, which requires the participation of and cooperation with foreign countries. A flexibly applied doctrine of equivalents ("the doctrine") is critical to that goal because it helps ensure that the essence of a patented invention is

protected from copyists, and protects the value of the patent in the U.S. and abroad, in part because major foreign countries adhere to similar equivalents doctrines. This Court, for over 150 years, and the Federal Circuit (prior to *Festo*), have adhered to a flexible bar. As discussed below, the *Festo* majority's dramatic shift to a complete bar conflicts with this Court's precedent and unjustifiably departs from settled Federal Circuit precedent. The equitable and policy considerations that gave rise to the doctrine of equivalents have been forsaken by the *Festo* court in the interest of providing a so-called bright line rule and greater certainty in the law. However, as discussed, *infra*, the rule is not easy to apply nor does it enhance certainty in infringement lawsuits.

Moreover, the U.S. is responsible to the international community for ensuring that "fair and equitable" enforcement procedures are available "to permit effective action against any act of infringement of intellectual property rights . . . including . . . remedies which constitute a deterrent to further infringements" under the Agreement on Trade-Related Aspects of Intellectual Property Rights, April 15, 1994, art. 41, ¶¶ 1 & 2, 33 I.L.M. 81 (hereinafter "TRIPS"). TRIPS applies to patents. *Id.* art. 27. As discussed below, the Complete Bar Rule is inconsistent with these obligations, as well as with the United States' efforts to attain uniform global patent laws.

ARGUMENT

A. Background

The United States Constitution grants Congress the authority to confer upon patentees certain exclusive rights to their inventions in order to

"promote the Progress of Science and useful Arts." U.S. Const. art. I, § 8, cl. 8. To obtain a patent, the inventor must prosecute his claimed invention before the PTO. The invention must satisfy the requirements of the Patent Act. *See, e.g.*, 35 U.S.C. §§ 101-03, 112. Documents concerning exchanges between the Patent Examiner ("the Examiner") and the applicant concerning, *inter alia*, the permissible scope of the claims, as well as any amendments made in response to an Examiner's rejection, are contained in a record called the "prosecution history." In this negotiation process, the patentee attempts to receive the broadest claims possible and the Examiner attempts to limit the scope of protection in accordance with the Patent Act. If granted, the patent gives the patentee the right to exclude others in the U.S. from, *inter alia*, making, using, or selling the patented invention (collectively, the "right to exclude") for twenty years (generally) from the date the application was filed. *See* 35 U.S.C. §§ 154, 271.

The doctrine of equivalents is a theory of patent infringement which finds infringement where the accused product or process "'performs substantially the same function in substantially the same way to obtain the same result'" as the claimed invention. *Graver Tank & Mfg. Co. v. Linde Air Prods. Co.*, 339 U.S. 605, 608 (1950) ("*Graver Tank*") (quoting *Sanitary Refrigerator Co. v. Winters*, 280 U.S. 30, 42 (1929)); *see also Warner-Jenkinson Co. v. Hilton-Davis Chem. Co.*, 520 U.S. 17, 29-30 (1997) (refining and reaffirming the doctrine of equivalents); *Wilson Sporting Goods Co. v. David Geoffrey & Assocs.*, 904 F.2d 677, 684 (Fed. Cir. 1990) (explaining that "the scope of patent protection *as defined by* the claims – remain the same and application of the doctrine

expands the right to exclude to 'equivalents' of what is claimed") (emphasis in original). The doctrine recognizes that a literal claim analysis unfairly prioritizes "literary skill" over "creativity" because the patentee must rely on words to describe concepts typically best described pictorially. *Autogiro Co. of Am. v. United States*, 384 F.2d 391, 396-97, 399 (Ct. Cl. 1967) ("*Autogiro*"); *Festo*, 234 F.3d at 621-22 (Linn, J., dissenting). However, the doctrine is applied restrictively and only to prevent "fraud on a patent." *Graver Tank*, 339 U.S. at 608.

The *Festo* majority claimed to further refine the doctrine but instead effectively destroyed and/or abandoned it. In *Festo*, the majority held that "prosecution history estoppel acts as a complete bar to the application of the doctrine of equivalents when an amendment has narrowed the scope of a claim for a reason related to patentability." 234 F.3d at 574. The process of obtaining a patent, its reliance on claim language to define its scope and the settled reliance on the equitable doctrine of equivalents, reveal the magnitude of the *Festo* majority's decision to effectively abolish the doctrine. Because almost every patent application is amended, a complete bar rule "read[s] the doctrine of equivalents out of the law." *Black & Decker, Inc. v. Hoover Serv. Ctr.*, 886 F.2d 1285, 1295 (Fed. Cir. 1989), *abrogated by Festo*, 234 F.3d at 574; *see also Hughes Aircraft Co. v. United States*, 717 F.2d 1351, 1363 (Fed. Cir. 1983) ("[a]mendment of claims is a common practice"), *overruled by Festo*, 234 F.3d at 574.

For example, applicants seeking to patent new technology often cannot conduct all necessary prior art searches before the filing deadline (*see* 35 U.S.C. § 102), and thus frequently must amend. *Festo*, 234

F.3d at 622 (Linn, J., dissenting). Moreover, the expediency and fairness of the process depends, as noted, on an "iterative" exchange between Examiner and applicant, where the applicant agrees to amend claims in response to an Examiner's rejection in order to reach agreement on a permissible set of claims. *Festo*, 234 F.3d at 618 (Michel, J., dissenting); *see also* Petition for Writ of Certiorari of Festo Corporation (U.S. Apr. 9, 2001) ("Pet. Mem.") at 25.

The notice function, served by a literal approach to patent claims, enhances competition by permitting others to "design around" the claims. *Festo*, 234 F.3d at 577. However, the doctrine of equivalents serves an equally if not more important function by discouraging "free riding" on a patentee's research and development of new technology through appropriation of the invention with a trivial change. *Id.* at 615-17 (Michel, J., dissenting). Indeed, as discussed *infra*, the doctrine serves this goal and encourages investment in technological innovation. Because 44% of United States patents were issued to foreign residents in 1999 (*see* Appendix, submitted herewith ("A-__") at 25), changing the *Warner-Jenkinson* Court's careful balancing of controls (*see Warner-Jenkinson*, 520 U.S. at 28-30, 33-34; Pet. Mem. at 4-6, 11, 14-15), likely will directly and globally affect the patent's scope and value. Further, domestic and foreign licensees of U.S. patents also are affected by a retroactive law that devalues a patent. *Festo*, 234 F.3d at 619 (Michel, J., dissenting).

The result of the *Festo* majority's decision is a patent system that becomes unworkable, permanently disabled and unjust, for several reasons. First, the Complete Bar Rule encourages the pirating of patented inventions through an insubstantial change to an

element of an amended claim. *Festo*, 234 F.3d at 641 (Newman, J., dissenting) (explaining that *Festo* provides a "new recipe for risk-free copying"). Second, the rule significantly devalues any unexpired patents that were amended in reliance on the flexible bar.

Third, the rule will stifle technological innovation, counter to the goals of the Patent Act and the goal of a uniformly applied global patent system. *See* discussion, *infra*, at 9-11. Fourth, the rule does not enhance certainty of claim interpretation (*cf. Festo*, 234 F.3d at 576-77), because it will require patentees to draft claims with additional, unnecessary language, and to add claims in order to compensate for the loss of equivalents, with the added result of inordinately costly and "protracted prosecution." *Id.* at 624 (Linn, J., dissenting). Fifth, if a patentee engages in the prosecution process (rather than the more time consuming and costly procedure of appealing Examiner rejections to the back-logged PTO Board of Patent Appeals (*see id.* at 618 (Michel, J., dissenting)), he likely will amend, and probably will be unable to argue that his amendment was not made for a "patentability" reason, given the broad definition of patentability provided by the *Festo* majority. *Id.* at 633-34 (Newman, J., dissenting). Thus, the patentee loses equivalents simply by engaging in the standard prosecution process. This result is inconsistent, *inter alia*, with the U.S. obligation under TRIPS to provide a "fair and equitable" patent prosecution system. *See* TRIPS, art. 62, ¶ 4 & art. 41, ¶ 2.

B. *Festo* Should Be Reversed On The Grounds That The Complete Bar Rule Will Harm Innovation And Global Intellectual Property Protection And Will Create An Armageddon For Patent Values

The *Festo* majority concluded, without any relevant basis or evidence, solely relying on its "experience," that the Complete Bar Rule will stimulate innovation, *i.e.*, the ability to design around the patent. *Festo*, 234 F.3d at 612 (Michel, J., dissenting). However, the court ignored the overriding consideration that the flexible bar is consistent with the more important goal of encouraging competitors to make "'leapfrogging' advances instead of simply copying at the edge of the claims." *Id.* at 640 (Newman, J., dissenting). In contrast, it is well settled that "technological advance and industrial vigor flow from legal and economic policies that encourage invention and support investment in the products of invention." *Id.* at 639. In fact, studies indicate that a bright line rule negatively impacts industrial innovation. *Id.* at 639-41.

Generally, "long-term economic growth requires a policy framework that encourages the creation and commercialization of new technologies, as contrasted with a policy that facilitates appropriation of the creative product, lest the creative product dry up in the face of too-easy appropriation." *Id.* at 640 (explaining that such "'[k]nowledge capital,'" secured by intellectual property rights, is an important "foundation of economic growth" and that patent protection should be of "sufficiently broad scope to the inventor who opens a new field, to provide adequate economic incentives while avoiding

duplication of effort and discouraging recourse to secrecy") (citing authority).

Thus, "placing new technology in the public domain" may decrease the "profit opportunity" and thus the incentive to "launch a new technology." *Id.* at 641 (citing authority). The *Festo* majority, however, did not consider the costs incurred, or risks taken, by innovators in new markets, particularly given the global economy. *See id.* at 640; *see also* Sheila F. Anthony, *Antitrust and Intellectual Property Law: From Adversaries to Partners*, 28 AIPLA Q.J. 1, 3 (Winter 2000) ("in today's global economy, companies must innovate if they hope to survive and thrive. . . . Innovating companies . . . all depend vitally on a legal framework that ensures a competitive market while protecting the rights of inventors and allowing innovators to profit from their ideas and inventions.").

In contrast, the imitator, protected by *Festo*, incurs none of these costs or risks, and yet, unjustifiably enjoys broad protection from liability, to the innovator's detriment. *Festo*, 234 F.3d at 640 (Newman, J., dissenting). In addition, the Complete Bar Rule prohibitively increases the costs to "individual inventors and start-up companies." *Id.* at 624 (Linn, J., dissenting). To compensate for the loss of equivalents through amendment, they likely will incur the "prohibitively high" costs and delays inherent in "exhaustive pre-filing searches" and in filing broad claims and appealing, rather than amending in response to, rejections. *Id.*

The end result will be to impede rather than to advance "technological progress." *Id.* In effect, under *Festo*, the U.S. is not providing the incentives for

technological innovation that it purports to encourage in its dealings with other countries under TRIPS and in discussions led by WIPO concerning substantive patent harmonization (*see* discussion, *infra*, at 16 and note 2), as a means to further global protection and support of innovation. Further, abandoning the doctrine devalues patents without sufficient notice to patentees, licensees or the public. *Cf. Warner-Jenkinson*, 520 U.S. at 32. *Festo* "affects myriad vested rights, on a novel legal theory, without briefing or argument." 234 F.3d at 642 (Newman, J., dissenting).

Moreover, without access to a range of equivalents, and given the risk of close imitation, inventors likely will seek trade secret protection, thus stifling the sharing of new technology on a global scale. *See Graver Tank*, 339 U.S. at 607 (explaining that permitting only claims for literal infringement "would foster concealment rather than disclosure of inventions, which is one of the primary purposes of the patent system"); *cf.* A-25 (Q. Todd Dickinson, then Assistant Secretary of Commerce and Commissioner of Patent & Trademarks, noting: "[t]he ingenuity and creativity of American inventors has established the U.S. as the technological leader among nations"). In addition, the U.S. marketplace will suffer from the *Festo* decision because inventors who choose to file for patent protection will have less incentive to file applications in the PTO, and thus will be less likely to introduce technological innovations into this market.

For these reasons, the Complete Bar Rule also will negatively impact the goal of global harmonization of patent laws, both with respect to prosecution and infringement procedures. At least one

commentator has noted that, although the doctrine of equivalents applies at the infringement stage rather than the prosecution stage, it "indirectly relates to the examination procedure. because the availability of the doctrine affects the literal scope of claims that the patent system should select for accomplishing patent policy." *See* Center for Advanced Study on Intellectual Property, The University of Washington School of Law, *Comments For Issues* 25 (2001), at http://www.uspto.gov/weboffices/dcom/olia/harmonization (hereinafter "*Comments for Issues*").[2]

The Complete Bar Rule "undermines the well-established practice under a first-to-file [priority] model" (*id.* at 26), followed by many European countries, which provides that "an invention must be new and nonobvious when it is filed with a patent office" and that "[a]ny disclosure of an invention forfeits the right to patent." *See id.* at 1-2 (citing European Patent Convention ("EPC") Art. 54). This model encourages a patent applicant to file as soon as his invention is completed, even if it is later necessary to fine tune claims or the invention itself during prosecution. *See id.* at 26. Further, given this model, many inventors file prior to consulting a patent attorney, increasing the likelihood of the necessity of

[2] These comments were provided in response to a notice published in March 2001 in the Federal Register by the Department of Commerce (Patent and Trademark Office), seeking commentary concerning the WIPO Draft Substantive Patent Law Treaty (the "SPLT"), which is U.S. supported and provides for an equivalents doctrine consistent with pre-*Festo* law. *See* discussion, *infra*, at 16.

later claim refinement. *Id.* Those countries which operate under a first-to-file model "presume the abandonment of these applications and imperfect claims in original applications . . . [and] guarantee applicants the right to amend claims without any disadvantage even if the original claims are imperfect." *Id.*

Additionally, "[t]his practice makes it possible to disclose inventions early . . . and helps small inventors and public research organization[s] by enabling them to file an application by themselves." *Id.* Given the first-to-file model, the Complete Bar Rule particularly penalizes foreign applicants who file in the U.S. after first filing outside the U.S., and (as is routine), amend their claims, because they likely will be barred from asserting a doctrine of equivalents theory in a U.S. lawsuit with respect to the narrowed claims. *Id.*

Moreover, "a mere clarification of language from a foreign translation may give rise to estoppel if the clarification results in a narrower literal scope with respect to the amended claims compared with that of original claims." *Id.* at 27 (citing *Festo*, 234 F.3d at 622 (Linn, J., dissenting)). Given the increasingly complex concepts and claim language of new technology and the difficulty of translating foreign descriptions of such complex technology, "foreign applicants are more vulnerable to the complete bar ... rule." *Comments for Issues, supra*, at 27. Such a scenario is inconsistent with the goal of encouraging inventors to make "'leapfrogging advances'" in their respective fields (*Festo*, 234 F.3d at 640 (Newman, J., dissenting)) and to disclose their inventions to the PTO rather than protecting them as trade secrets.

The rule also is inconsistent with the United States' encouragement of foreign nations that provide patent protection to U.S. citizens "to afford patent protection commensurate with that provided in the United States by the doctrine of equivalents." Brief for the United States as *Amicus Curiae*, 1996 WL 172221, at *1-2 (U.S. Apr. 11, 1996), filed in *Warner-Jenkinson*. Likewise, the rule will hamper the United States' goal to "enhance its ... international trade with the aid of intellectual property. Indeed, recent economic history illustrates the stagnation of the economy coinciding with periods of diminished industrial investment in technologic advance." *Hilton Davis Chem. Co. v. Warner-Jenkinson Co.*, 62 F.3d 1512, 1531 (Fed. Cir. 1995) (Newman, J., concurring), *rev'd on other grounds*, 520 U.S. 17 (1997).

For example, the devaluation of patent rights resulting from the Complete Bar Rule likely will deter foreign licensing activities here, particularly since certain of the member countries that subscribe to TRIPS adhere to an equivalents doctrine, including Japan, Germany, France, the United Kingdom, and Australia. *See* A-22-24, 27-28 (attaching French and Australian equivalents doctrines); David Bannerman & Chris Hamer, "*Different Approaches to the 'Doctrine of Equivalents' in Germany, UK, US and Japan*," AIPPI Journal 82, 82-94, 98 (Mar. 2000) (setting forth the doctrines of equivalents in the United Kingdom, Germany and Japan and concluding: "There seems to be an international tendency towards convergence of the law on doctrine of equivalents, at least as regards Europe and Japan.").

In addition, the Complete Bar Rule is counter to the EPC's goal of harmonizing patent laws. EPC Article 69 notes the need to consider, in interpreting

patent claims, the "'description and drawings'" and Article 69 is itself interpreted to provide "'fair protection for the patentee with a reasonable degree of certainty for third parties.'" *See* Bannerman, *supra*, at 83 (quoting EPC, Oct. 5, 1973, Protocol on the Interpretation of Article 69 of the Convention ("the Protocol")). A recent revision to the Protocol, which is not yet in force, requires consideration of an "equivalent to an element specified in the claims" in determining the "extent of protection conferred by a European patent." Act Revising the Convention on the Grant of European Patents, Nov. 29, 2000, Protocols, art. 2.

For all these reasons, the Complete Bar Rule will create an imbalance in patent values between the U.S. and major foreign countries and force foreign applicants to incur the cost and delay of preparing and filing different applications in their home country and the United States to avoid loss of equivalents here. Indeed, certain foreign inventors may be reluctant to file for patent protection here, reducing revenue to the PTO, which issued 44% of its patents in 1999 to foreign residents, 25% of which were issued to Japanese and German residents. A-25-26. This imbalance in the scope of patent protection under U.S. law as opposed to the laws of other countries may encourage domestic companies to shift their technological focus abroad. This imbalance also will impede the goal of uniform and effective global patent protection, which is essential if the United States is to remain a world leader in technological innovation. *See generally* Brief for the United States as *Amicus Curiae, supra*, at *1-2.

The rule also is inconsistent with the United States' significant efforts, as a WIPO and SCP

member, to harmonize national patent formalities on an international scale in order to provide easier access to worldwide patent protection and reduce costs to patent applicants. The draft SPLT, which is U.S. supported and provides for a doctrine of equivalents consistent with pre-*Festo* law, is a product of such international efforts. *See* Request for Comments On the International Effort to Harmonize the Substantive Requirements of Patent Laws, 66 Fed. Reg. 15409 (Mar. 19, 2001) (requesting comments on the SPLT); A-1-8, 10-14, 16-21 (attaching excerpts of, and commentary concerning, the SPLT).

C. *Festo* Should Be Reversed On The Ground That The Complete Bar Rule Is Unworkable

As discussed, *supra*, the Complete Bar Rule will have a direct and far-reaching impact on patentees, inventors, the PTO and the public, both in the United States and globally, because the majority of the approximately 1.2 million unexpired patents are subject to this rule. This section considers whether the policies that *Festo* sought to protect are, first, in fact protected by the Complete Bar Rule and second, whether they outweigh the policies of international harmonization of patent laws and encouraging innovation on a global scale.

The main policy reasons the *Festo* majority offers for the Complete Bar Rule are that (1) it will enhance the "notice function"; and (2) the flexible bar rule is "'unworkable.'" *Festo*, 234 F.3d at 575-78. Contrary to *Festo*, a flexible bar is consistent with the notice function. First, a competitor can discern the meaning and scope of amended claim language (including potential equivalents) by reviewing the prosecution

history. *Id.* at 626 (Linn, J., dissenting). Indeed, "the scope and meaning of claim limitations may be more easily discerned for amended limitations . . . based on the record developed during prosecution." *Id.* Second, competitors are protected by a reasonableness standard, *i.e.*, "whether persons reasonably skilled in the art would have known of the interchangeability of an ingredient not contained in the patent with one that was." *Graver Tank*, 339 U.S. at 608-09. Third, the *Warner-Jenkinson* Court's refinement of the doctrine ensures that third parties are not burdened with determining the meaning of omissions from the prosecution history. *See Warner-Jenkinson*, 517 U.S. at 33-34; Pet. Mem. at 5, 17.

Fourth, the restriction to a literal analysis does not enhance the notice function sufficiently to justify abolishing this equitable doctrine, because even a literal analysis can result in varying interpretations and require consideration of the prosecution history. *See Autogiro*, 384 F.2d at 396 ("The very nature of words would make a clear and unambiguous claim a rare occurrence."); *Hoechst Celanese Corp. v. BP Chems. Ltd.*, 78 F.3d 1575, 1578-81 (Fed. Cir. 1996) (dispute concerning the meaning of "stable" in a patent claim). Fifth, this Court, for over a century, and the Federal Circuit, for nearly two decades, have found the "notice function" adequately served despite the flexible bar. *Festo*, 234 F.3d at 598-616, 619 (Michel, J., dissenting).

Similarly, the *Festo* majority erroneously concluded that the doctrine is "unworkable" because courts may differ on the extent of the subject matter found relinquished through amendment. *Id.* at 575. As noted, however, a literal approach also is vulnerable to varied interpretations of claim language. Moreover,

courts applying the Complete Bar Rule have found it unworkable. As the court in *Creo Prods. Inc. v. Presstek, Inc.*, No. C.A. 99-525-GMS, 2001 WL 637397, at *7 (D. Del. May 11, 2001) noted, "[i]n the immediate aftermath of *Festo*, district courts (and litigants) are struggling to interpret its breadth and applicability," in part because "'[w]hile the *Festo* decision purports to eliminate uncertainty regarding the reach of prosecution history estoppel, it raises other uncertainties as to the application of the decision itself . . . . [including] the reach of the phrase ... substantially related to patentability.'" *Id.* at *9 n.21 (internal quotations omitted) (quoting Bruce J. Rose & John A. Wasleff, *Was Festo Really Necessary?*, 83 J. Pat. & Trademark Off. Soc'y 111, 127 (Feb. 2001)).

Two courts applying *Festo* have carved out exceptions to the Complete Bar Rule to avoid its potentially draconian results, reasoning that such exceptions served the notice function, the *Festo* court's main justification for the Rule. In *Creo Products*, 2001 WL 637397, at *1, *6, involving a patent for a direct press imaging system, the alleged infringer, seeking summary judgment of non-infringement, claimed that the patentee's amendment of the claim at issue barred all equivalents as a matter of law under *Festo*. *Id.* at *6-7. The court denied summary judgment, finding that the narrowing amendment at issue, while made to overcome the prior art, did not trigger the Complete Bar Rule. *Id.* at *10-12.

Specifically, the court held that the amendment explicitly concerned the "movement of the imaging head" (*id.* at *9), and only implicitly concerned the resulting swath created by the motion (the limitation at issue), even though the Examiner, in rejecting the

claim, addressed both the motion of the imaging head and the resulting image. *Id.* at *8-10. *Cf. id.* at *8 (noting that the patentee claimed that the Examiner was concerned more with the motion of the imaging head than the image resulting from the motion). The court declined to apply the Complete Bar Rule to the "implicit" portion of the amendment, reasoning that the public notice function – the underlying policy of the rule – would not be served by applying the rule to "implicit changes in a limitation." *Id.* at *9-10.

As the court explained, applying the Complete Bar Rule to such implicit changes:

> would result in giving accused infringers a virtually unlimited weapon with which to attack otherwise valid patents and avoid otherwise infringing activities. Until directed otherwise, the court declines to sanction such a result. The court believes doing so would violate the spirit, if not the letter, of the Federal Circuit's holding in *Festo*.

Id. at *10. Another district court, declining to find the Complete Bar Rule triggered by a claim amended for a patentability reason, likewise found that *Festo* did not address a particular factual scenario concerning claim amendments. *See Aclara Biosciences, Inc. v. Caliper Tech. Corp.*, 125 F. Supp. 2d 391, 398-401 (N.D. Cal. 2000) ("*Aclara*"). Specifically, the court explained, *Festo* did not address whether, if one portion of a clause in a claim is amended such that it triggers the Complete Bar Rule, then the other (unamended) portions of the clause also trigger the Rule. *Id.*

Finding that the Complete Bar Rule was not

triggered with respect to the other portions of the amended clause, the court reasoned, "[e]xtending the logic of *Festo* to an entire clause in a claim when only a portion of that claim has been amended . . . does not advance" the public notice function. *Id.* at 401. The court also found that the *Festo* court provided no "explicit direction" in the situation where it is unclear whether claim language at issue involves one, or a "series of limitations," each of which apparently would be subject to a separate *Festo* analysis. *Id.* The *Aclara* court further stated: "Adopting a rule that any amendment to any portion of a clause in a claim creates prosecution history estoppel as to the entire clause and not just the portion of the clause that was amended would do little to promote the purposes of the complete bar approach." *Id.* at 402. These decisions reveal the district courts' struggle to avoid the often harsh results of the Complete Bar Rule by carving out policy-based exceptions in factual scenarios which (these courts claim) were not addressed by the *Festo* majority. The result, however, creates uncertainty when courts make *ad hoc* determinations concerning the scope of, and exceptions to, the Complete Bar Rule.

For example, distinguishing between "explicit" and "implicit" claim amendments (as in *Creo Products*), when the *Festo* court made no such distinction, likely would require a subjective interpretation of the claim language at issue, as well as extrinsic evidence supporting that interpretation – both results which the *Festo* court apparently hoped to avoid in its bright line approach. *See Creo Prods.*, 2001 WL 637397, at *8 (discussing the patent holder's interpretation of the reason underlying the narrowing amendment). Likewise, as in *Aclara*, the decision of

whether a clause of a claim is comprised of separate segments, and whether only one segment was narrowed by the amendment, also detracts from the increased certainty desired and predicted by the *Festo* court, because the prosecution history may be unclear concerning the treatment of the clause at issue. *See Aclara*, 125 F. Supp. 2d at 401.

Indeed, relying on *Festo*, the Federal Circuit may have inadvertently extended the Complete Bar Rule to apply to claims which were neither narrowed by amendment nor introduced as narrower replacement claims, because the bright-line approach left no discretion to the court to examine the context of the claim language. *See Mycogen Plant Science, Inc. v. Monsanto Co.*, Civ No. 00-1127, 2001 WL 910389, at *1, *4-5 (Fed. Cir. Aug. 14, 2001). Thus, these cases reveal the uncertainty resulting from an attempt to impose a bright line approach on a fact-specific issue.

Accordingly, if courts are baffled by the reach of the Complete Bar Rule despite its seemingly "bright line" approach, foreign patentees likely will also have difficulty drafting and amending (or even simply translating) patent claim language in order to avoid triggering the Rule. In addition to the increased time and costs associated with drafting an application in light of the Complete Bar Rule, foreign applicants likely will be reluctant to file in the U.S. and risk devaluing their patent rights.

In contrast, as noted, a flexible bar rule is consistent with the patent practice of major foreign countries and will promote uniformity in patent practice on a global scale. It also is consistent with our legal system's fact-specific application of legal rules and doctrines. Indeed, there has been no call for

bright-line rules in trademark or copyright law, or tort and securities laws, or even other areas of patent law, despite the potential for varied outcomes in those areas because of fact-based inquires and reasonableness standards. *See, e.g. Polaroid Corp. v. Polarad Elecs. Corp.*, 287 F.2d 492, 495 (2d Cir. 1961) (listing eight factors relevant to a likelihood of confusion analysis in a trademark infringement case and noting that "the court may have to take still other variables into account"); *Georgia-Pacific Corp. v. United States Plywood Corp.*, 318 F. Supp. 1116, 1120-21 (S.D.N.Y. 1970) (listing fifteen factors relevant to evaluating the amount of damages to be awarded to a prevailing patent holder in an infringement action, explaining, "there is no formula by which these factors can be rated precisely in the order of their relative importance;" rather, the court must "exercise a discriminating judgment reflecting its ultimate appraisal of all pertinent factors in the context of the credible evidence"), *modified on other grounds*, 446 F.2d 295 (2d Cir. 1971); *Read Corp. v. Portec, Inc.*, 970 F.2d 816, 826-28 (Fed. Cir. 1992) (listing nine factors relevant to determining whether to award, and, if awarded, the extent of, enhanced damages pursuant to the Patent Act, 35 U.S.C. § 284); *cf. Warner-Jenkinson,* 520 U.S. at 37 ("Much as the perspective of the hypothetical 'reasonable person' gives content to concepts such as 'negligent' behavior, the perspective of a skilled practitioner provides content to, and limits on, the concept of 'equivalence.'"). Thus, that businesses may need to structure their conduct and assess risks in light of a flexible bar is consistent with what the law imposes in other substantive legal areas that involve fact-based inquiries.

As the court in *Control Resources, Inc. v. Delta Elecs., Inc.*, 133 F. Supp. 2d 121 (D. Mass. 2001) stated, explaining that the Complete Bar Rule is inconsistent with the district court's fact-finding role:

> "litigation" and "case by case analysis" is the very *raison d'etre* of the district courts. Courts of statutory jurisdiction, which embody America's rich common law tradition, daily bring to expressive life for juries of common sense America's broadest philosophic legal concepts -- concepts such as "reasonable doubt," "proximate cause," "scienter," and "negligence."

Id. at 124. In *Control Resources*, the court held that the Complete Bar Rule was automatically triggered where the claim language at issue had been narrowed to overcome the prior art. *Id.* at 136. The court noted, however, that "[s]uch a cursory examination of the prosecution history . . . seems ill-suited to undergird such a dramatic result. Prior to *Festo*, the work of counsel and the court would have just begun. *Id.* The court noted, in *dicta*, that a pre-*Festo* review of the prosecution history would "compel[] the conclusion" that plaintiff through its claim amendment did not abandon the entire range of equivalents. *Id.* at 136-37.

Indeed, the distinction made by the *Festo* majority between amended and original claims is arbitrary and illogical: "The majority does not explain why a new bright line rule is compelled to strictly construe the inventor's choice of words in amendments but is not similarly compelled for original claim limitations." *Festo*, 234 F.3d at 626 (Linn, J., dissenting). Thus, the complete bar should be viewed as an abuse of patent

procedure proscribed by TRIPS. *See* TRIPS, art. 41, ¶ 1. Finally, it is well settled that a failure to support innovation with strong patent protection will negate the benefits from, and results of, scientific research, and is inconsistent with the Constitution's mandate to protect inventors from copyists (*see Festo,* 234 F.3d at 621; 640-41 (Linn, J.; Newman, J., dissenting)), and the international goal, supported by the U.S., of uniform global protection and enforcement of patents.

The Complete Bar Rule also unjustly frustrates the expectations of inventors and patentees worldwide, and the PTO, all of which rely on the availability of some range of equivalents even when claims are narrowed in response to rejections. *Id.* at 618 (Michel, J., dissenting); *Warner-Jenkinson*, 520 U.S. at 32 n.6. In light of *Festo*, however, even where the PTO requests only "minor or clarifying amendments," applicants likely will appeal an Examiner's rejection to the PTO Board of Patent Appeals (which already is overwhelmed with appeals) rather than lose equivalents through amendment. *Festo,* 234 F.3d. at 618, 624 (Michel, J., Linn, J., dissenting). Thus, *Festo* will seriously disrupt the patent system. *Id.* at 618-19 (Michel, J., dissenting).

Further, the Complete Bar Rule lengthens the prosecution process because inventors will be forced to add claims, numerous equivalent terms, and any insubstantial variation of the claimed invention, to account for the loss of equivalents. *Id.* at 624 (Linn, J., dissenting); *cf.* TRIPS, art. 41, ¶¶1-2; art. 62, ¶¶1-2. The attorney's drafting skills will be prioritized over the attributes of the invention (with significant added prosecution costs). *Festo*, 234 F.3d at 624 (Linn, J., dissenting). These likely scenarios frustrate the goals of the Patent Act, which prioritizes the

essence of the invention over its linguistic description. *See Graver Tank*, 339 U.S. at 607; A-1-8, 10-14, 16-21 (attaching excerpts of, and commentary concerning, the SPLT).

In contrast, the *Festo* majority did not consider the *Warner-Jenkinson* Court's careful balancing of controls (*see Warner-Jenkinson*, 520 U.S. at 33-34, 40-41), the equitable nature of the doctrine, or the impact of the rule given the United States' efforts to harmonize substantive patent laws and its role as a world leader in encouraging technological innovation, as discussed, *supra*.

D. *Festo* Should Be Reversed On The Grounds That The Complete Bar Rule Is Contrary To This Court's Precedent And An Unprincipled Departure From Federal Circuit Law

This section addresses the *Festo* majority's departure from, and conflict with, settled precedent, against the backdrop of the international effort to globalize patent laws, as well as the U.S government's responsibilities under TRIPS. Prior to *Festo*: (1) this Court expressly declined to adopt a Complete Bar Rule; (2) courts applied the doctrine on a case by case basis and with a flexible range of equivalents; and (3) courts were required to determine, with respect to narrowed claims, "what was surrendered and why, measured by the representations made by the applicant in order to obtain the patent." *Festo*, 234 F.3d at 631-32 (Newman, J., dissenting).

The *Warner-Jenkinson* Court "endorsed" the approach of over 150 years of Supreme Court precedent which recognized a flexible bar and preserved the balancing of controls. *Id.* at 608-09

(Michel, J., dissenting); *Warner-Jenkinson*, 520 U.S. at 30-32; *see also* Pet. Mem. at 19-20, 22-23. Thus, contrary to *Festo*, the potential for a complete bar rule was addressed and rejected by the *Warner-Jenkinson* Court. Pet. Mem. at 5-6, 14-15. In rejecting such a rule, the Court also considered the PTO's reliance on a flexible bar in requesting amendments: "[t]o change so substantially the rules of the game now could very well subvert the various balances the PTO sought to strike when issuing the numerous patents which have not yet expired." *Warner-Jenkinson*, 520 U.S. at 32 n. 6. Further, the Complete Bar Rule is a dramatic shift from established Federal Circuit precedent from 1983-2000. *See Festo*, 234 F.3d at 609-15 (Michel, J., dissenting). Moreover, the *Festo* majority did not explain the error in any of the prior decisions applying a flexible bar. *Id.* at 612, 619.

The Complete Bar Rule is inconsistent with settled precedent on additional grounds. First, the *Festo* majority's broad definition of "patentability" further restricts access to equivalents, "exacerbat[ing] the conflict with . . . *Warner-Jenkinson*." *Id.* at 630 (Newman, J., dissenting). Second, the rule unjustly abandons the equitable foundation of the doctrine. *Id.* at 617 (Michel, J., dissenting) (citing *Hecht Co. v. Bowles*, 321 U.S. 321, 329-30 (1944), emphasizing: "[f]lexibility rather than rigidity has distinguished [equity jurisdiction]"). "Without this flexibility, courts are precluded from protecting patentees from copyists." *Id.; cf.* TRIPS, art. 41, ¶¶ 1-2 (requiring "fair and equitable" and "effective" patent "enforcement procedures"). In sum, the *Festo* majority's decision is unprincipled law which attacks the global value of a patent from all angles. *See Graver Tank*, 339 U.S. at 607 (warning that a

literalistic approach "convert[s] the protection of the patent grant into a hollow and useless thing . . . . [and] encourage[s] . . . the unscrupulous copyist to make unimportant and insubstantial changes and substitutions in the patent which, though adding nothing, would be enough to take the copied matter . . . outside the reach of law").

For all these reasons, the *Festo* majority exceeded its authority in this case. Perhaps it is for Congress to determine this issue. As this Court stated: "Congress can legislate the doctrine of equivalents out of existence any time it chooses . . . . The various policy arguments made by both sides are thus best addressed to Congress, not this Court." *Warner-Jenkinson*, 520 U.S. at 28. Indeed, Congress implicitly supported the doctrine by passing the Patent Act in 1952, after *Graver Tank* was decided, without attempting to legislate around the doctrine. *See id.* at 25-27.

Finally, the *Festo* majority's implied warning that the flexible bar approach will "undermine the claiming system and destroy the public's ability to rely on the patent claiming system to mark the boundaries granted to the patentee" is one that has been voiced since 1853 in dissenting opinions in cases upholding the flexible bar. *Festo*, 234 F.3d at 627-28 (Linn, J., dissenting). However, the concerns underlying these dire predictions are misplaced, and, significantly, have not come to pass. *Id.* If this Court does not reverse *Festo*, leaving the Complete Bar Rule as the law will, *inter alia* (1) render the United States non-compliant with its international commitments under TRIPS; (2) disrupt the continued pursuit of substantive harmonization of patent laws; (3) negatively impact ongoing efforts to reduce the costs of obtaining patent protection here and abroad; and (4) directly harm the

role of the U.S. as a world leader in technological innovation.

CONCLUSION

For all of the foregoing reasons, the decision of the Federal Circuit in *Festo* should be reversed.

Respectfully submitted,

Maxim H. Waldbaum
Counsel of Record
Lori D. Greendorfer
Salans Hertzfeld Heilbronn
Christy & Viener
620 Fifth Avenue
New York, New York
10020

R. Danny Huntington
Raymond C. Stewart
John P. Sutton
Tipton D. Jennings IV
Fédération Internationale
Des Conseils En
Propriété
Industrielle

August 30, 2001

APPENDIX

TABLE OF CONTENTS

World Intellectual Property Organization, Geneva, Standing Committee On the Law of Patents, Fourth Session, Geneva, November 6 to 10, 2000, Suggestions for the Further Development of International Patent Law A-1

WIPO World Intellectual Property Organization, Geneva, Standing Committee On the Law of Patents, Fifth Session, Geneva, May 14 to 19, 2001, Draft Substantive Patent Law Treaty A-12

WIPO World Intellectual Property Organization, Geneva, Standing Committee On the Law of Patents, Fifth Session, Geneva, May 14 to 19, 2001, Draft Regulations And Practice Guidelines Under The Draft Substantive Patent Law Treaty A-18

Doctrine of Equivalents in France (Cabinet Beau de Lomenie, Conseils En Propriété Industrielle).....A-22

1999 Patent Statistics Announced (Press Release #00-16, Mar. 2, 2000).....A-25

Doctrine of Mechanical Equivalents (IP Australia, APO Manual of Practice & Procedure).....A-27

WORLD INTELLECTUAL PROPERTY ORGANIZATION

GENEVA

STANDING COMMITTEE ON THE LAW OF PATENTS

Fourth Session

Geneva, November 6 to 10, 2000

SUGGESTIONS FOR THE FURTHER DEVELOPMENT OF INTERNATIONAL PATENT LAW

Document prepared by the International Bureau

I. Introduction

1. The Program and Budget for 2000-2001 includes, under Sub-Program 09.1, "Law of Patents," the following activities, *inter alia* (see document A/34/2-WP/PBC/2, page 80, emphasis added):

> "Convening of four meetings* of the SCP (and any Working Group set up by this Committee), to consider issues relating to the law of patents, including:
>
> - the finalization of the draft Patent Law Treaty and draft Regulations, using wherever possible solutions adopted for PCT procedures: convening of a Diplomatic Conference for the conclusion of the Patent Law Treaty, and *consideration of the desirability and feasibility of further harmonizing patent law*;
>
> ..."

2. During the 1998-1999 biennium, the Standing Committee on the Law of Patents (SCP) devoted its time to the negotiation and finalization of the Patent Law Treaty (PLT), which was adopted at the Diplomatic Conference for the Adoption of the PLT, held in Geneva from May 11 to June 2, 2000.

3. Concerning the future work of the SCP, during its earlier sessions as well as at the PLT Diplomatic Conference, a considerable number of delegations and

---

* One of these four sessions has been replaced by the Diplomatic Conference for the Adoption of the Patent Law Treaty.

representatives have expressed their wish to consider issues related to further harmonization of substantive requirements of patent law after the conclusion of the PLT.

4. The present document contains suggestions for issues related to further harmonization of patent laws for consideration by the SCP at its fourth session (the first time the SCP will meet during the 2000-2001 biennium), and at its future sessions.

II. Issues related to further harmonization for consideration by the SCP

5. A number of delegations and representatives had expressed the position, at the first session, first part, of the SCP (June 15 to 19, 1998), that discussions concerning further harmonization, in particular harmonization of substantive issues of patent law, should be resumed as soon as possible after the conclusion of the Diplomatic Conference (see document SCP/1/7, paragraphs 24, 25, 27, 33, 34, 35, 37, 40, 44, 55, 56, 57, 58 and 73). In this context, it may be noted that, at its third meeting held on May 4 and 5, 2000, the Industry Advisory Commission of WIPO adopted a Resolution calling for "work, in the medium term, on a treaty on the harmonization of substantive patent law, with a view to facilitating greater mutual recognition of search and examination results by patent Offices." In addition, the Policy Advisory Commission of WIPO made several recommendations at its meeting of June 15, 2000, among which one reads as follows: "that efforts should be made towards further substantive harmonization in the field of industrial property law, in particular, patent law."

6. It should be noted that the Patent Cooperation Treaty (PCT), which has established a system for the filing of international patent applications having the same effect as national applications filed in each of the PCT Contracting States designated in the international application, contains a number of principles of substantive patent law applicable to the international phase provided under the PCT. However, it may also be noted that PCT Article 27(5) allows a Contracting State to apply any substantive conditions of patentability as it desires during the national phase.

7. In response to international calls for harmonization of national and regional patent laws, negotiations had started, as early as 1985, on a draft Treaty Supplementing the Paris Convention as far as Patents are Concerned (hereafter referred to as "draft Patent Harmonization Treaty 1991"), which was discussed at the first part of a Diplomatic Conference in 1991, but never concluded. The draft Patent Harmonization Treaty of 1991 included substantive as well as formal aspects of patent law. Some of its provisions, for instance those on patentable subject matter, rights conferred, term of protection and reversal of burden of proof for process patents, were incorporated into the Agreement on Trade-Related Aspects of Intellectual Property Rights (TRIPS Agreement), concluded in 1994. Nevertheless, a number of issues in respect of national and regional patent law have neither been addressed by the TRIPS Agreement, nor by any other worldwide international treaty on patent law, in particular not by the recently adopted PLT, which covers only patent formalities. For the sake of completeness, it should be added that important steps in respect of such harmonization have

been achieved in the framework of certain regional systems, such as the European Patent Organisation (EPO), the Eurasian Patent Organization (EAPO), the African Regional Industrial Property Organization (ARIPO) and the Organisation africaine de la propriété intellectuelle (OAPI), as well as through the harmonization of national laws within certain regional systems, as for instance the Andean Pact.

8. The need for further patent harmonization beyond the PLT arises mainly from the fact that the costs of obtaining broad patent protection on an international level have become extremely high. The objective of further harmonization should therefore be to lower costs. This goal can, however, only be envisaged if a number of basic legal principles underlying the grant of patents are harmonized.

9. In view of the present situation and the objective mentioned above, the International Bureau suggests that at least the following basic issues underlying the grant of patents, which are of particular importance to the further development of the international patent system, could be included in the discussions of the SCP: the definitions of prior art, novelty, inventive step (non-obviousness) and industrial applicability (utility); sufficiency of disclosure; and the structure and interpretation of claims.

10. In order to facilitate discussions of the SCP concerning the desirability and feasibility of further harmonizing patent law, each of the six mentioned issues are described below by (1) explaining the basic issue, (2) giving examples of the present status of laws and practices between different systems showing the existence of, or need for further, harmonization, and (3) indicating the relevant provisions under the first

draft Patent Harmonization Treaty of 1991 and the solution proposed therein. The Basic Proposal for the draft Patent Harmonization Treaty of 1991 and the Regulations are presented, for information purposes, in document SCP/4/3. The Notes for the Basic Proposal for the draft Patent Harmonization Treaty of 1991 and the Regulations are contained in document SCP/4/4.

A. Prior art

The basic issue

11. Prior art is generally understood to constitute the body of knowledge which was available to the public before the filing date or, if priority is claimed, before the priority date, of a patent application. Identifying the relevant prior art is one of the cornerstones of patent examination, since such prior art will be evaluated during examination to determine the patentability of the invention concerned. It is by comparing the invention for which protection is sought with the prior art that novelty and inventive step (non-obviousness) of the invention are established. Furthermore, prior art will, after the grant of a patent, be determining in order to evaluate the validity or invalidity of the patent.

12. Some of the issues to be considered in the context of prior art include, in particular, notions such as "availability to the public," "person skilled in the art," and "means of making available to the public." Further items to be considered are, in particular, issues such as non-prejudicial disclosures, the grace period, or the question of applications filed earlier than, but published after, the date of filing of the application concerned.

Draft Patent Harmonization Treaty 1991

32. The Basic Proposal for the draft Patent Harmonization Treaty of 1991 contained, in Article 25 "Obligations of the Right Holder," two alternatives. Alternative A proposed to include no provision on this subject at all, while alternative B contained the following provision relating to the disclosure of an invention in Article 25(1):

> "(1) The owner of a patent shall have at least the following obligations in addition to any other provided for in this Treaty:
>
> (i) to disclose the invention in a manner sufficiently clear and complete for the invention to be carried out by a person skilled in the art; the description shall set forth at least one mode for carrying out the invention claimed; this shall be done in terms of examples, where appropriate, and with reference to the drawings, if any; however, any Contracting Party may provide that the description set forth the best mode for carrying out the invention known to the inventor at the filing date or, where priority is claimed, priority date of the application; ..."

F. Drafting and interpretation of claims

The basic issue

33. The claims define the invention, and thus the scope of protection of the patent. They are therefore the heart of the patent. This is true in particular after the grant of the patent, since others may not commercially use what is covered by the claims, but may use any other information contained in the specification. It is therefore particularly important

that claims contain all the important features of the claimed invention. The claims form the basis for the examination as to the patentability of the invention. In addition, they may be affected by partial renunciation or invalidity of the patent, and they are relevant for the question of unity of invention. They also play a role when defining the contents of two inventions in the case of dependency or priority contests under the first to invent system, and when assessing the identity of inventions in the framework of the prohibition of double patenting.

34. When talking about claims, there are two different aspects to take into consideration: firstly, the drafting of the claims, and secondly the interpretation of the claims.

Status of harmonization

35. Article 6 of the PCT states the following:

"The Claims

The claim or claims shall define the matter for which protection is sought. Claims shall be clear and concise. They shall be fully supported by the description."

36. In addition, PCT Rule 6 contains, in particular, indications on the manner of claiming, on the numbering of claims, as well as further details. In the context of claims, it may be mentioned that PCT Rule 13 deals with the issue of unity of invention.

37. Nevertheless, both the drafting and the interpretation of claims diverge significantly in different legal systems, which may lead to different scopes of protection for the same invention, and to different results in the case of

invalidity determinations. Some of these differences are described below.

Drafting of claims

(a) Certain systems require that only the *technical* features of the invention be contained in the claims, but not other features, such as economical or other elements. This is not the case for all patent systems. It has to be noted, however, that not all systems require an invention to have a technical character.

(b) While certain patent systems require a two-part form of the claims (the first part containing the designation of the subject matter belonging to the prior art, the second part being the characterizing part indicating the new technical features for which protection is claimed), other systems do not require this kind of structure, so that the prior art basis does not always appear in the claims.

(c) Certain patent laws allow for a plurality of closely related independent claims reflecting a single inventive concept to be contained in the same application ("unity of invention"), while according to other laws, the respective provisions are applied in a very narrow manner.

(d) While certain legal systems allow for different categories of claims, such as for instance product, process or apparatus claim, to be included in the same application, other patent systems have restrictions in this respect.

(e) Certain patent systems provide for restrictions on the dependency of sub-claims, which lead to a high number of dependent claims and, in certain offices, to

high costs due to additional fees to be paid for each claim in excess of a certain number.

(f) Certain systems allow the lack of support of the claims by the description to be a ground for rejection or invalidation of the patent.

Interpretation of claims

(a) In most patent systems, the literal text of the claims forms the basis for the determination of the scope of protection of the patent. However, while certain systems do not allow an interpretation of the claims to go much beyond their wording, others have developed a broad way of interpreting the claims.

(b) In certain systems the claims have to be interpreted in an objective manner, while in others, what the inventor subjectively had intended to say is taken into consideration.

(c) In certain patent systems, only the description and the drawings may be used in order to interpret the claims. In other systems, further - or additional - means of interpreting the claims may be allowed.

(d) While certain legal systems provide that equivalents are covered by the claims, other legal systems do not provide for equivalents. In many systems, the doctrine of equivalents has been developed by case law, and is not to be found in statutory law. Systems vary widely as to the scope of equivalents applied.

(e) The possibilities to amend the claims during examination, as well as after the grant of the patent, vary considerably in different systems.

Draft Patent Harmonization Treaty 1991

38. The Basic Proposal for the draft Patent Harmonization Treaty of 1991 contained the following detailed provisions related directly or indirectly to claims: Articles 4 ("Claims"), 5 ("Unity of Invention") and 21 ("Extent of Protection and Interpretation of Claims"), and Rules 3 ("Manner of Claiming") and 4 ("Details Concerning the Requirement of Unity of Invention").

IV. Conclusion

39. In view of the above, the SCP is invited to note and consider the suggested issues related to the further development of international patent law. The SCP is invited, in particular, to express its guidance to the International Bureau as to whether and to what extent the mentioned issues should be included in the future work of the SCP.

WIPO

WORLD INTELLECTUAL PROPERTY ORGANIZATION

GENEVA

STANDING COMMITTEE ON THE LAW OF PATENTS

Fifth Session

Geneva, May 14 to 19, 2001

DRAFT SUBSTANTIVE PATENT LAW TREATY

prepared by the International Bureau

INTRODUCTION

1. At its fourth session, held from November 6 to 10, 2000, the Standing Committee on the Law of Patents (SCP) agreed that the International Bureau should submit draft provisions for a future legal instrument on the substantive harmonization of patent law. The present document contains a first draft of a Treaty, presently called the "Substantive Patent Law Treaty (SPLT)." It takes into account the views expressed at the fourth session of the SCP.

2. The SCP further expressed the wish that the International Bureau should submit two distinct versions of draft provisions on the SPLT: one version should be based on existing texts, such as the "Draft Treaty Supplementing the Paris Convention as Far as Patents Are Concerned" ("1991 Draft"; see documents PLT/DC/3 and 69) or the Patent Cooperation Treaty (PCT), while the second version should use new and plain language. In the course of drafting the present document, it became apparent that it may be more appropriate to establish a single text containing two alternatives. Thus, the document contains, where appropriate, an Alternative A, which is based upon, but is not necessarily identical to, existing texts as explained above, and an Alternative B, which uses more contemporary language. Where the text of Alternative A is not identical to earlier existing texts, such as, for example, the 1991 Draft, this is to take into account the international developments that occurred since the establishment of these texts, and to reflect the wish of the SCP to achieve full harmonization, without permitting territorial

differences between countries. As agreed by the SCP at its fourth session, the draft provisions are limited to certain determined issues, in particular those contained in paragraph (9) of document SCP/4/2.

3. It should be noted that certain of the suggested provisions (for example draft Article 9) reflect a first-to-file system, since their origin is to be found in existing texts. This approach does, however, not prejudice the future drafting of the relevant provisions in any way, but was chosen merely to reflect certain provisions of existing texts, such as the 1991 Draft.

4. Draft Regulations and Draft Practice Guidelines under the SPLT are contained in document SCP/5/3. These provisions are presented without an alternative and are based on existing texts only, since their future wording will depend on the choice of the SCP with respect to the drafting style of the Articles.

PART I: GENERAL PROVISIONS

Article 1

Abbreviated Expressions

For the purposes of this Treaty, unless expressly stated otherwise:

(i) except where the context indicates otherwise, words in the singular include the plural, and *vice versa*, and masculine personal pronouns include the feminine.

Article 1bis

Applications [and Patents] to Which the Treaty Applies

(1) [*Principle*] Subject to paragraph (2), the provisions of this Treaty and the Regulations shall apply to[:

(i)] applications for patents for invention and for patents of addition, which are filed with or for the Office of a Contracting Party[;

(ii) patents for invention, and to national and regional patents of addition, which have been granted with effect for a Contracting Party].

(2) [Reserved]

Article 13

Scope of Claims

[Alternative A]

[No provision.]

[End of Alternative A]

[Alternative B]

The scope of the claim shall not exceed the scope of the disclosure of the application. However, the claim shall not be limited to what is expressly disclosed in the application.

[End of Alternative B]

Article 14

[Alternative A]

Scope of Protection

(1) [*Scope*] The scope of protection conferred shall be determined by the claims, which are to be interpreted in the light of the description and drawings, as prescribed in the Regulations.

[(2) [*Equivalents*] For the purpose of determining the scope of protection conferred by the application, due account shall be taken of elements which are equivalent to the elements expressed in the claims, as prescribed in the Regulations.]

[End of Alternative A]

[Alternative B]

Interpretation of Claims

For the purposes of examination, and of determining rights under a published application, each claim shall be interpreted in light of the [description, drawings] [disclosure] and the prior art, as prescribed in the Regulations.

[End of Alternative B]

WORLD INTELLECTUAL PROPERTY ORGANIZATION

GENEVA

STANDING COMMITTEE ON THE LAW OF PATENTS

Fifth Session

Geneva, May 14 to 19, 2001

DRAFT REGULATIONS AND PRACTICE GUIDELINES UNDER THE DRAFT SUBSTANTIVE PATENT LAW TREATY

prepared by the International Bureau

INTRODUCTION

The present document contains draft Regulations and draft Practice Guidelines under the draft Substantive Patent Law Treaty (SPLT), which is contained in document SCP/5/2.

Unlike in the draft SPLT, the draft Regulations and draft Practice Guidelines contained in the present document are based on existing texts only. No alternatives are suggested at this stage, since their future wording will depend on the choice of the SCP with respect to the drafting style of the draft SPLT (see also the explanations given in the introduction part of document SCP/5/2).

Rule *11*
Interpretation of Claims Under Article 14

(1) [*Principle*] For the purposes of Article 14(1), the claims shall be so interpreted as to combine fair protection for the applicant with a reasonable degree of certainty for third parties. Consequently, the claims shall not be interpreted as being necessarily confined to their strict literal wording. Neither shall the claims be considered as mere guidelines allowing that the protection conferred by the application extends to what, from a consideration of the description and drawings by a person skilled in the art, the applicant has contemplated, but has not claimed.

[(2) [*Equivalents*] For the purposes of Article 14(2), an element shall generally be considered as being equivalent to an element as expressed in a claim if, at the time of any alleged infringement, it performs substantially the same function in substantially the same way and produces substantially the same result as the element as expressed in the claim, and it is obvious to a person skilled in the art that the same result as that achieved by means of the element as expressed in the claim can be achieved by means of the equivalent element.

(3) [*Prior Statements*] In determining the scope of protection, due account shall be taken of any statement limiting the scope of the claims made by the applicant during procedures concerning the grant or the validity of the patent.]

[Rule 11, continued]

(4) [*Examples*] If the application contains examples of the embodiment of the invention or examples of the functions or results of the invention, the claims shall not be interpreted as limited to those examples; in particular, the mere fact that a product or process includes additional features not found in the examples disclosed in the patent, lacks features

found in such examples or does not achieve every objective or possess every advantage cited or inherent in such examples shall not remove the product or process from the scope of protection conferred by the claims.

(5) [*Abstract*] The abstract shall not be taken into account for the purpose of determining the protection conferred by the claims.

Cabinet Beau de Loménie

CONSEILS EN PROPRIÉTÉ INDUSTRIELLE

Doctrine of equivalents in France

(1) DEFINITION

A product or a method is considered as a technical equivalent to a patented product or to a patented method if, being similarly applied, it reproduces the function of the claimed means with a view to obtain the same result or a result of similar nature, while having a different form or structure.

(2) APPLICATION OF THE DOCTRINE OF EQUIVALENTS TO ASSESSMENT OF INFRINGEMENT

(a) It is assumed that a patent claim covers particular means characterised by its form, by its application and by its function within the frame of that application.

It is also assumed that an alleged infringing object, being similarly applied, provides the same function, leading to a similar result, but has a different structure or form.

The Judge will first determine whether the function of the claimed means is new.

If the function is not new, i.e. if the prior art shows that means were already known which carried out the same function to provide a similar result, then there can be no infringement, because the claims cover only the particular form or structure and the scope of the claim cannot be extended to cover the function.

If the function is new, then there is infringement.

The above has been constantly assessed by French Courts. For instance, in Bennes Saphen v/s Guina et al. (Paris Appeal Court, December 1st, 1988) :

"...an invention being characterised by its form, by the application thereof and by its function, when the function is not new and when, by way of consequence, the patent cannot protect it, means having a different implementation form and carrying out the same function as the claims means cannot constitute an infringement by equivalence, the result not having to be taken into consideration".

The above decision has been confirmed by the Supreme Court (Cour de Cassation) on December 4, 1990:

"It is rightfully that a decision has dismissed an allegation of infringement by equivalence, having stated that the combination of means of the invention carries out a known function, and that the patent could only cover that combination in its particular form, and having checked that the alleged infringing device, although having the same function, had a structure different from the one claimed by the patent".

Thus to be held infringing, it is not sufficient that a device or a process be equivalent to a claimed device, or process (i.e. has the same function when applied in a similar way to achieve a similar result) ; it is also necessary that the function of the claimed device or process be in itself novel.

(b) It is assumed that a patent claim covers a particular combination of features which is new and inventive.

It is also assumed that an alleged infringing object reproduces the same combination of features except one (or several) being different in its (or their) form.

If it can be shown that the concerned feature of the alleged infringing object, although having a different form, is equivalent to a corresponding feature of the claimed invention, then infringement will be stated.

It is not then required to show that the function of that particular feature is new in itself. It is only necessary that this particular feature carries out the same function as a corresponding feature of the claimed combination, and co-operates with the other features in a similar way.

© Cabinet Beau De Loménie, 1999

PTO COMMISSIONER TO HOST ONLINE DIALOG
http://www.uspto.gov/web/offices/com/speeches/00-16.htm

PRESS RELEASE #00-16 CONTACT: Brigid Quinn
March 2, 2000 Kim Byars
703-305-8341

1999 PATENT STATISTICS ANNOUNCED

In calendar year 1999, the U.S. Patent and Trademark Office (PTO) granted record 169,154 patents, including 153,493 utility (inventions), 14,732 design, and 421 plant patents. In calendar year 1998, PTO issued 163,208 patents.

U.S. resident inventors received 55.6% of all U.S. patents in 1999. California resident inventors claimed a 20.0 percent share (18,865 patents) of these patents, followed by inventors from New York (7.3 percent, 6,900 patents), Texas (6.8 percent, 6,424 patents), New Jersey (4.6 percent, 4,372 patents), and Illinois (4.6 percent, 4,308 patents). Inventors in Puerto Rico, Idaho, South Dakota, Kentucky, Arkansas, Kansas, and Wyoming had the largest percentage increases in patents from 1998 to 1999.

"The ingenuity and creativity of American inventors has established the U.S. as the technological leader among nations, fueling this country's longest economic expansion," noted Q. Todd Dickinson, Assistant Secretary of Commerce and Commissioner of Patents and Trademarks.

Forty four percent of U.S. patents were issued to residents of foreign nations. The ten foreign countries that received the most U.S. patents during calendar year 1999 are displayed below. For more statistics, please visit

http://www.uspto.gov/web/offices/com/speeches/pattr99.pdf

1999 1999 Share of (1998) (1998 to 1999)

Rank	# Patents	All Patents	Country*	(Rank in 1998)	(# Patents)	(Change in # Patents)
1	32,515	19.2%	Japan	(1)	(32,119)	(+1.2%)
2	9,896	5.9%	Germany	(2)	(9,582)	(+3.3%)
3	4,526	2.7%	Taiwan	(4)	(3,805)	(+18.9%)
4	4,097	2.4%	France	(3)	(3,991)	(+2.7%)
5	3,900	2.3%	United Kingdom	(5)	(3,726)	(+4.7%)
6	3,679	2.2%	South Korea	(7)	(3,362)	(+9.4%)
7	3,678	2.2%	Canada	(6)	(3,537)	(+4.0%)
8	1,686	1.0%	Italy	(8)	(1,820)	(-7.4%)
9	1,542	0.9%	Sweden	(11)	(1,346)	(+14.6%)
10	1,396	0.8%	Netherlands	(9)	(1,382)	(+1.0%)

*Please note that the country of origin is determined by the residence of the first-named inventor.

APO Manual Of Practice And Procedure

IP Australia

PATENTS-TRADEMARKS-DESIGNS

3.10 DOCTRINE OF MECHANICAL EQUIVALENTS

3.10.1 The task of the court in considering anticipation was explained in *General Tire & Rubber Co v The Firestone Tyre & Rubber Co Ltd*, (1972) RPC 457 at page 485, as follows:

> "To determine whether a patentee's claim has been anticipated by an earlier publication it is necessary to compare the earlier publication with the patentee's claim ... The construction of these documents is a function of the court, being a matter of law, but, since documents of this nature are almost certain to contain technical material, the court must, by evidence, be put into the position of a person of a kind to whom the document is addressed ...."

3.10.2 In the course of dealing with an objection to grant for want of novelty, the courts have had regard to the **doctrine of mechanical equivalents**. That is, whether, on the evidence before the court, the difference between the claimed invention and the alleged anticipation represented no more than the substitution of an inessential feature with an obvious **equivalent**.

See e.g. *R D Werner & Co Inc v Bailey Aluminium Products Pty Ltd*, (1989) 13 IPR 513.

(It may be noted that the courts appear to have taken the view that if a feature of the claim has a mechanical (i.e. functional) **equivalent** in the alleged anticipation, then *ipso facto* the feature must be inessential. Furthermore, the existence of mechanical **equivalents** has been

determined from evidentiary material (which generally would not be available to examiners), and not as a matter of construction.)

3.10.3 In any event, the real issue to decide when using the reverse infringement test to judge lack of novelty is whether a prior disclosure contains a clear description of, or clear instructions to make, something that possesses all the essential features of the claim. For this reason, examiners should not concern themselves whether an inessential feature of the claim replaces a feature of the prior art disclosure with a mechanical equivalent.

AUG 31 2001 (24)

Supreme Court, U.S.
FILED
AUG 31 2001
OFFICE OF THE CLERK

No. 00-1543

IN THE
SUPREME COURT OF THE UNITED STATES
OCTOBER TERM, 2001

Festo Corporation,

Petitioner,

v.

Shoketsu Kinzoku Kogyo Kabushiki Co, Ltd., a/k/a SMC Corporation and SMC Pneumatics, Inc.,

Respondents.

ON WRIT OF CERTIORARI TO THE UNITED STATES COURT OF APPEALS FOR THE FEDERAL CIRCUIT

BRIEF OF *AMICUS CURIAE* THE NATIONAL BAR ASSOCIATION IN SUPPORT OF PETITIONER

John Moses
Millen, White, Zelano & Branigan, P.C.
Arlington Court House Plaza 1
2200 Clarendon Blvd
Suite 1400
Arlington, Virginia 22201
(703) 243-6333

Edward W. Gray, Jr.
Counsel of Record
Kendrew H. Colton
Fitch, Even, Tabin & Flannery
1801 K Street, NW
Suite 401L
Washington DC 20006
(202) 419-7000

Counsel for Amicus Curiae

26 pp

TABLE OF CONTENTS

Page

INTEREST OF *AMICUS CURIAE* 2

SUMMARY OF ARGUMENT 2

ARGUMENT 5

I. *Festo* Subverts The Traditional Exchange Between Patent Applicants and the Patent Office 6

A. The Court in *Warner-Jenkinson* Did Not Intend to Upset Traditional Patent Practice 8

B. *Festo* Encourages Applicants To Avoid Making Statements or Amendments in the Public Record 11

C. *Warner-Jenkinson* Expressly Held That Only A "Limited Set of Reasons" Can Invoke Prosecution History Estoppel 12

D. *Warner-Jenkinson* Permits A Flexible Approach 13

II. *Festo* Will Increase The Costs of Patent Prosecution, Only to Hurt Individual Inventors and Small Businesses 17

III. Minority Businesses Will Be More Profoundly Impacted by *Festo* 20

CONCLUSION 21

TABLE OF AUTHORITIES

Page

FEDERAL CASES

Bayer AG v. Elan Pharm. Research Corp.,
212 F.3d 1241 (Fed. Cir.), *cert. denied*,
531 U.S. 993 (2000) 11

Bonito Boats, Inc. v. Thunder Craft Boats, Inc.,
489 U.S. 141 (1989) 5

Festo Corp. v. Shoketsu Kinzoku Kogyo Kabushiki Co.,
234 F.3d 558 (Fed. Cir. 2000)..... *passim*

Graham v. John Deere Co.,
383 U.S. 1 (1966)..... 16

Graver Tank & Mfg. Co. v. Linde Air Prods. Co.,
339 U.S. 605 (1950)..... 2,3,11,15,17

Hubbell v. United States,
179 U.S. 77 (1900)..... 10

Warner-Jenkinson Co. v. Hilton Davis Chem. Co.,
520 U.S. 17 (1997)..... 3,8,11,12,13

Westinghouse Elec. & Mfg. Co. v. Formica Insulation Co.,
266 U.S. 342 (1924)..... 16

Winans v. Dimmead, 56 U.S. 330 (1853), ... 2

In re Zletz,
893 F.2d 319 (Fed. Cir. 1989) 9,10

FEDERAL STATUTES

Sup. Ct. R. 37.1 13

35 U.S.C. §§ 102, 103, 112..... 3,17

MISCELLANEOUS

Manual of Patent Examining Procedure §§ 609, 707.07(j)
(7th ed. 2000) 8,9

J. Douglas Hawkins, *Importance and Access of International Patent Protection for the Independent Inventor*,
3 U. Balt. Intell. Prop. L.J. 145, 146 (1995) 4

Glenn Yago, *A flourishing Business Base Needs Minority Entrepreneurs*,
L.A. Times, April 23, 2001..... 20

Note, *In the Process of Controverting Its Constitutionally Given Purpose The U.S. Patent System Discriminates Against Inventors With Limited Financial Means*,
11 Law & Ineq. 565, 577 (1993)..... 17,21

No. 00-1543

IN THE
SUPREME COURT OF THE UNITED STATES
OCTOBER TERM, 2001

Festo Corporation,

Petitioner,

v.

Shoketsu Kinzoku Kogyo Kabushiki Co, Ltd., a/k/a SMC Corporation and SMC Pneumatics, Inc.,

Respondents.

ON WRIT OF CERTIORARI TO THE UNITED STATES COURT OF APPEALS FOR THE FEDERAL CIRCUIT

BRIEF OF *AMICUS CURIAE* THE NATIONAL BAR ASSOCIATION IN SUPPORT OF PETITIONER

The National Bar Association submits this brief *amicus curiae* in support of petitioner in this case.[1]

[1] No counsel for any petitioner or respondent authored this brief in whole or in part. Nor did any person or entity, other than *amicus* or its counsel, make a monetary contribution to the preparation or submission of this brief. The National Bar Association has permission of the parties to submit this brief

INTEREST OF AMICUS CURIAE

The National Bar Association is the largest minority bar organization in the United States. It is dedicated to advancing the science of jurisprudence, upholding the honor of the legal profession, promoting social intercourse among the members of the bar, and protecting the civil and political rights of all citizens of the several states of the United States.

The National Bar Association comprises a diverse group of patent practitioners, including government officials, corporate counsel, patent litigators and patent prosecutors. The range of clientele represented among these practitioners is equally diverse, including both small and large corporations, academia, government and individual inventors. As would be expected, the membership within the National Bar Association has differing views on the merits of *Festo* -- based upon their personal expectations of the patent system as well as the interests of their individual clients.

This *amicus* brief is not, however, being submitted on behalf of any particular client of the members of the National Bar Association. Rather, the National Bar Association submits this brief on behalf of a voice that has not been heard in this dispute -- minorities that predominately comprise individual inventors and small businesses. These individuals' use of and access to the patent system is unduly limited by the Federal Circuit's *en banc* decision in *Festo Corp. v. Shoketsu Kinzoku Kogyo Kabushiki Co.*, 234 F.3d 558 (Fed. Cir. 2000). Accordingly, *Festo* must be overruled.

SUMMARY OF ARGUMENT

More than a century ago, the Supreme Court in *Winans v. Dimmead*, 56 U.S. 330 (1853), recognized the doctrine of equivalents as a means to provide full protection to the statutory patent grant. *See Graver Tank & Mfg. Co. v.*

Linde Air Prods. Co., 339 U.S. 605, 608 (1950). This doctrine assists the patentee in excluding copyists of the patented invention who do not literally infringe the patent claims.

Despite the laudable goals of the doctrine of equivalents, there exists a tension between this doctrine and the notice function of the Patent Statute. *See Warner-Jenkinson Co. v. Hilton Davis Chem. Co.*, 520 U.S. 17, 28-29 (1997). Specifically, when applied unwisely, the doctrine of equivalents promotes uncertainty in interpreting the scope of patent claims. On the other hand, the patent statute requires that claims particularly point out and distinctly claim the patented invention. *See* 35 U.S.C. § 112. Nonetheless, when confined to its proper role, the doctrine of equivalents does *not* conflict with the Patent Statute.[2]

In the opinion below, the Federal Circuit once again grappled with this tension -- albeit in the context of prosecution history estoppel. Prosecution history estoppel operates to prevent an overly broad application of the doctrine of equivalents, thereby preserving the notice function of claim language. In essence, it functions to prevent the recapture of subject matter surrendered during prosecution. Although *Festo* raises a number of important issues, the paramount concern facing the court was resolving the tension between the doctrine of equivalents and the Patent Statute.

While applauding the Federal Circuit's meaningful intentions, the National Bar Association nonetheless believes

---

[2] *See Warner-Jenkinson*, 520 U.S. at 28 ("Absent something more compelling than the dubious negative inference offered by petitioner, the lengthy history of the doctrine of equivalents strongly supports adherence to our refusal in *Graver Tank* to find that the Patent Act conflicts with that doctrine.").

that *Festo* must be overruled. Such action is required because *Festo* erects unnecessary barriers between the patent system and individual inventors and small businesses. First, *Festo* effectively prevents any meaningful written exchange between the patent applicant and the Patent Office. This exchange has traditionally given applicants with even limited knowledge of the patent laws meaningful access to the patent system. Second, *Festo* significantly increases the costs of patent prosecution to what can be prohibitively high levels for individual inventors and small businesses. Third, *Festo* adds a level of gamesmanship to patent prosecution practice that will more surely benefit individuals and companies with substantial financial resources. Such barriers to the patent system cannot be allowed to stand.

Rather than erecting unnecessary barriers, the patent laws should create incentives to patent. Specifically, individual inventors and small businesses need the incentives of a robust patent system in order to justify the effort and expense in seeking patent protection. Moreover, the patent system needs individual inventors and small businesses because they are an undeniable source of innovation. *See* J. Douglas Hawkins, *Importance and Access of International Patent Protection for the Independent Inventor*, 3 U. Balt. Intell. Prop. L.J. 145, 146 (1995) ("One of the most often cited reports on inventor input in technology innovation is a review of sixty-one of the most important inventions of the Twentieth Century, where it was found that over half of them stemmed from independent inventors or small firms.").

ARGUMENT

In *Festo*, the Federal Circuit placed paramount importance on the notice function of patent claims.[3] While this is an important goal, it does not require the destruction of the doctrine of equivalents. Moreover, this goal is nonetheless subservient to the Constitutional purpose of the patent system -- encouraging the disclosure of innovative ideas.[4] *Festo* dampens innovation by discouraging disclosure. Moreover, Judge Linn in dissent aptly noted that "the new bright line rule . . . wrongly sets in place a regime that increases cost and complexity of patent prosecution to the detriment of individual inventors, start-up companies, and others unable to bear these increased costs."[5]

Between 1983 and 1999 individual inventors and small companies accounted for nearly twenty-five percent of all patent applications filed by United States inventors.[6] As such, any barriers to patenting facing these applicants will have a significant impact upon the patent system. In the sections below, Part I discusses the disruption to traditional patent prosecution caused by *Festo*. Part II addresses the increased patent prosecution costs caused by *Festo*. Part III

---

[3] *See* 234 F.3d at 575 ("Our decision to reject the flexible bar approach adopted in *Hughes I* comes after nearly twenty years of experience in performing our role as the sole court of appeals for patent matters. In those years, *the notice function of patent claims has become paramount, and the need for certainty as to the scope of patent protection has been emphasized.*") (emphasis added).

[4] *See Bonito Boats, Inc. v. Thunder Craft Boats, Inc.*, 489 U.S. 141, 151 (1989) ("Moreover, the ultimate goal of the patent system is to bring new designs and technologies into the public domain through disclosure.").

[5] *See Festo*, 234 F.3d at 620 (Linn, J, concurring-in-part, dissenting-in-part).

[6] These statistics are based upon figures obtained from the United States Patent Office.

addresses *Festo's* more profound impact on minority inventors and businesses.

I. Festo Subverts The Traditional Exchange Between Patent Applicants and the Patent Office

Obtaining a United States patent has typically involved an "iterative process" of give and take between the applicant and the Patent Office. This fact was echoed in the opinion below.[7] The exchange between the patent applicant and the Patent Office is particularly important given the United States' peripheral claiming system. Under this system, the patent applicant traditionally files broad claims that are narrowed during prosecution through a recorded exchange with the Patent Office.[8] This process normally proceeds in the following manner.

The applicant initially files a patent application with the Patent Office. The Patent Office then assigns the application to a particular technology sector. That technology sector then assigns the application to a particular patent examiner. That examiner will then search the prior art to determine if the application contains patentable subject matter. The patent examiner will then issue an office action, almost always rejecting one or more claims in light of references uncovered during the examiner's search of the

---

[7] *Festo*, 234 F.3d at 618 ("Patent prosecution is an iterative process in which the applicant typically submits claims that are thought to be allowable, the examiner rejects the claims in view of the prior art, and the applicant then amends the claims to traverse the examiner's patentability rejections.") (Michel, J.; concurring-in-part, dissenting-in-part).

[8] *See Festo*, 234 F.3d at 592 ("Past practice has been to claim broadly in the initial application for a patent, and then negotiate with the United States Patent and Trademark Office through one or more rejections until arriving at a mutually acceptable set of claims.") (Plager, J., concurring).

prior art.[9] The examiner may also reject the application for matters of form, such as unclear claim language.

In response to the examiner's rejections, the applicant will normally amend the claim language by adding further limitations. The applicant will also argue why the added limitations distinguish the claims over the prior art. In addition, the applicant may change the wording of the claims to make them more understandable. The examiner will then review the applicant's response and either (i) allow the application to issue as a patent or (ii) maintain the rejections in a subsequent office action. If the examiner follows the latter course, the applicant can submit additional amendments and arguments, and request an interview with the examiner in order to determine if the application contains patentable subject matter. Assuming that the application does in fact contain patentable subject matter, the application should issue as a patent. Once the patent issues, the recorded exchange between the applicant and the Patent Office becomes publicly available. This public record, called the file wrapper, provides further clarification -- beyond the claims themselves -- regarding the scope of the patent.[10] The above-described process is a well-recognized and longstanding practice in the United States.

---

[9] *See Festo*, 234 F.3d at 618 ("The vast majority of patent applications contain claims that are initially rejected in view of the prior art, and are only allowed after being amended.") (Michel, J., concurring-in-part, dissenting-in-part).

[10] *Festo*, 234 F.3d at 599 ("When a patent applicant narrows his claims during prosecution by adding a limitation to traverse a prior art rejection, the substance of the communication between the applicant and the examiner may *further* notify the public as to additional limits on the enforceable scope of the patent claims.") (Linn, J, concurring-in-part, dissenting-in-part).

A. The Court in Warner-Jenkinson Did Not Intend To Upset Traditional Patent Practice

In *Warner-Jenkinson*, this Court cautioned the Federal Circuit not to upset the traditional expectations between patent applicants and the Patent Office. *See* 520 U.S. at 31-32 ("[W]e should be extremely reluctant to upset the basic assumptions of the PTO without substantial reasons for doing so."). This was an important point because the exchange between the applicant and the Patent Office is an essential part of the patent system. This is especially true for individual inventors and small businesses that normally prosecute applications with very limited budgets.

Indeed, the Patent Office assists less sophisticated patent applicants when such assistance will help these applicants obtain a patent.[11] This practice ensures that every applicant -- even those with limited resources -- has meaningful access to the patent system.

The exchange between the applicant and the Patent Office has importance beyond the assistance specifically

---

[11] *See* Manual of Patent Examining Procedure ("M.P.E.P.") § 707.07(j) (7th ed. 2000):

> When, during the examination of a pro se application it becomes apparent to the examiner that there is patentable subject matter disclosed in the application, the examiner should draft one or more claims for the applicant and indicate in his or her action that such claims would be allowed if incorporated in the application by amendment.
>
> This practice will expedite prosecution and offer a service to individual inventors not represented by a registered patent attorney or agent. *Although this practice may be desirable and is permissible in any case deemed appropriate by the examiner, it will be expected to be applied in all cases where it is apparent that the applicant is unfamiliar with the proper preparation and prosecution of patent applications.* (emphasis added).

allowed by the rules. For example, because it is not required,[12] patent applicants with limited resources do not normally perform an extensive review of the prior art before filing an application. Therefore, the applicant's exchange with the examiner brings the relevant prior art to his or her attention.[13] Moreover, without the expertise of sophisticated patent counsel, the claims initially presented in an application will ordinarily not reflect the precise contours of the applicant's invention.[14] The exchange with the examiner helps the applicant refine the claim language. As such, the exchange between the applicant and the Patent Office is an important tool for defining the scope of the applicant's invention -- both for the applicant and for the public. *See In re Zletz*, 893 F.2d 319, 322 (Fed. Cir. 1989):

> [D]uring patent prosecution when claims can be amended, ambiguities should be recognized, scope and breadth of language explored, and clarification imposed. . . . An essential purpose of patent examination is to fashion claims that are precise, clear, correct, and unambiguous. Only in this way can uncertainties of claim scope be removed, as

---

[12] *Accord* M.P.E.P. § 609

[13] *Accord Festo*, 234 F.3d at 622 ("Moreover, while an inventor is often aware of relevant prior art relating to the area he is developing, he is not always fully cognizant of all the relevant prior art until after his application has been filed, thus again necessitating some fine tuning of claim language after the application filing has been made.") (Linn, J, concurring-in-part, dissenting-in-part).

[14] *Accord Id.* at 621 ("Due to the inherent limitations of language, the fit between the description and the concept is almost always inexact.") (Linn, J, concurring-in-part, dissenting-in-part).

much as possible, during the administrative process.[15]

Despite the undeniable benefits of the applicant's exchange with the Patent Office, it has traditionally come at a price. Specifically, the record created by this exchange may create an estoppel. *See Festo*, 234 F.3d at 564-65 ("The logic of prosecution history estoppel is that the patentee, during prosecution, has created a record that fairly notifies the public that the patentee has surrendered the right to claim particular matter as within the reach of the patent."). Moreover, the record has normally been strictly construed against the applicant.[16] As such, traditional patent prosecution practice has normally penalized applicants for their actions before the Patent Office -- but never so severely as with the rule pronounced in *Festo*.[17]

Festo dramatically alters traditional patent prosecution practice.[18] In particular, *Festo* changes the traditional rule that only certain amendments -- normally relating to prior art -- could narrow the scope of the patent

---

[15] *See also Festo*, 234 F.3d at 626 ("Paradoxically, the scope and meaning of claim limitations may be more easily discerned for amended limitations, as compared with originally drafted claim limitations, based on the record developed during prosecution.") (Linn, J., concurring-in-part, dissenting-in-part).

[16] *Hubbell v. United States*, 179 U.S. 77, 83-84 (1900) (holding that amendments "must be strictly construed against the inventor and in favor of the public, and looked upon as in the nature of disclaimer").

[17] Prior to *Festo*, the overwhelming majority of cases adopted a flexible bar approach. *See Festo*, 234 F.3d at 610-11 (Michel, J, concurring-in-part, dissenting-in-part).

[18] *Accord Festo*, 234 F.3d at 592 ("Under the new rules of engagement, [traditional prosecution practice] will create full prosecution history estoppel regarding every limitation that is amended for patentability reasons, a term now broadly defined.") (Plager, J., concurring).

claim. *See Warner-Jenkinson*, 520 U.S. at 30-31 ("In each of our cases . . . prosecution history was tied to amendments made to avoid the prior art, or otherwise to address a specific concern -- such as obviousness -- that arguably would have rendered the claimed subject matter unpatentable."). *Festo* also jettisons the traditional reasonableness approach to the scope of estoppel.[19] In its place, the majority erects a bright line rule that bars any range of equivalents for amendments relating to patentability -- a term bounded only by the Patent Statute.[20] As discussed below, *Festo's* new bright line approach will, *inter alia*, deprive the public of any meaningful prosecution record.

B. Festo Encourages Applicants To Avoid Making Statements or Amendments in the Public Record

While *Festo* does not foreclose the traditional exchange between the applicant and the Patent Office, it does render the resulting patent more susceptible to copyists.[21] This is because the patent's coverage will, in most cases, be limited to a literal reading of any amended claim elements. In such a case, the patent is substantially weakened. *See Graver Tank*, 339 U.S. at 607 ("[C]ourts have . . . recognized that to permit imitation of a patented invention which does

---

[19] *See Bayer AG v. Elan Pharm. Research Corp.*, 212 F.3d 1241, 1254 (Fed. Cir.), *cert. denied*, 531 U.S. 993 (2000) ("Prosecution history estoppel is a 'legal matter . . . guided by equitable and public policy principles underlying the doctrines involved and by the facts of the particular case.'") (quotation omitted).

[20] 234 F.3d at 574 ("We hold that prosecution history estoppel acts as a complete bar to the application of the doctrine of equivalents when an amendment has narrowed the scope of a claim for a reason relating to patentability.").

[21] *See Festo*, 234 F.3d at 600-01 (Michel, J., concurring-in-part, dissenting-in-part).

not copy every literal detail would be to convert the protection of the patent grant into a hollow and useless thing.").

To thwart copyists, applicants must now avoid all narrowing amendments in order to obtain any meaningful patent protection. This creates a nearly insurmountable obstacle for applicants that cannot afford sophisticated patent counsel. Specifically, to avoid the preclusive effects of *Festo*, an applicant may be required to conduct a thorough pre-filing search of the prior art in order to craft near-perfect patent claims. Otherwise, any amendment required to overcome the prior art will invoke *Festo's* complete bar. If nonetheless faced with a rejection, the applicant must now be able to appeal an examiner's rejection all the way through the federal courts, if necessary. The cost and complexity associated with these tasks will challenge most Fortune 500 companies, let alone individual inventors and small businesses. Indeed, without sophisticated patent counsel, many applicants' access to the patent system will be illusory at best. The framers of the Constitution never intended such a result. Moreover, such a result is precluded by this Court's decision in *Warner-Jenkinson*.

C. Warner-Jenkinson Expressly Held That Only A "Limited Set Of Reasons" Can Invoke Prosecution History Estoppel

In answering *en banc* question number one, the Federal Circuit held that "a substantial reason relating to patentability" includes any reason relating to the statutory requirements for a patent. *See* 234 F.3d at 563. This holding conflicts with *Warner-Jenkinson*. In particular, *Warner-Jenkinson* held that estoppel applies only to "a limited set of reasons." 520 U.S. at 32. Petitioner and the dissenters below

have squarely addressed this issue, therefore, the National Bar Association will not burden this Court with repetitive argument. *See* Sup. Ct. R. 37.1.[22] It is sufficient to note the clear conflict between *Warner-Jenkinson* and *Festo's* holding that, regardless of the reason, every amendment relating to patentability creates an estoppel.

D. Warner-Jenkinson Permits A Flexible Approach

In answering *en banc* question number three, the majority in *Festo* held that once prosecution history estoppel is properly invoked there is no permissible range of equivalents. 234 F.3d at 564. Unfortunately, *Warner-Jenkinson* left this issue open for debate. On one hand, this Court held that so long as the doctrine of equivalents is applied on an element-by-element basis and subject to prosecution history estoppel "we are confident that the doctrine will not vitiate the central functions of the patent claims themselves." *Warner-Jenkinson*, 520 U.S. at 29-30. Petitioner and the *Festo* dissenters cite this language to demonstrate this Court's acceptance of the flexible bar approach. Conversely, this Court also held that where an unexplained and unrebutted amendment is for a substantial reason related to patentability, "prosecution history estoppel would bar application of the doctrine of equivalents as to that element." *Warner-Jenkinson*, 520 U.S. at 33. Respondent and the *Festo* majority seize this language as support for the complete bar approach.

In resolving this issue, the National Bar Association urges this Court to adhere to the flexible bar approach.

---

[22] Like Petitioner, the National Bar Association also disagrees with the retroactive effect of *Festo*. But, again, will not burden this Court with repetitive argument.

Indeed, the complete bar approach adopted by *Festo* "upsets the Supreme Court's balance between the competing needs of sufficient public notice and meaningful patent protection."[23] This is because innovation can only be assured where applicants are able to obtain meaningful patent protection and have sufficient incentive in order to do so.

The *Festo* majority's belief that "certainty will stimulate investment in improvements and design-arounds because the risk of infringement will be easier to determine"[24] is simply wrong. Indeed, this conclusion erroneously presupposes that a copyist's goal is to innovate. This is not the case. A copyist's primary interest is profit gained with minimal investment:

> The innovator takes the risk of commercial success or failure of new things in the market . . . The imitator bears none of these risks; he is interested only in the successful products, not the failures; he moves in only after the invention has been made and tested and the market developed, and can operate at lower margins.[25]

Any law that encourages innovation necessarily takes into account the underlying purpose of the copyist. The complete bar approach does not. The following example derived from the facts of *Graver Tank* illustrates this point.

Suppose that company A is the owner of a patent to a new electric welding process that is superior to any other

---

[23] *Festo*, 234 F.3d at 600 (Michel, J., concurring-in-part, dissenting-in-part).

[24] *Festo*, 234 F.3d at 577.

[25] *Festo*, 234 F.3d at 640 (Newman, J., concurring-in-part, dissenting-in-part).

process in the market. Now suppose that company B wants to get into the market. And upon suggestion by its patent counsel, company B orders the file wrapper for company A's patent. In that file wrapper, company B learns that the patent claims as originally filed included an element directed to a "flux." However, due to an examiner's rejection the element was amended to recite a "flux containing a major proportion of alkaline earth metal silicate." Under the complete bar adopted by *Festo*, company B would be certain that the claim only covered a flux containing a major proportion of alkaline earth metal silicate -- and nothing more.

Armed with this knowledge, company B could either (i) invest in research and develop its own electric welding process or (ii) it could simply mimic the teachings of company A's patent and use a flux composed mainly of manganese silicate, as did the accused infringer in *Graver Tank*. Because company B's primary purpose for entering the market is to make a profit, it has less economic incentive to create its own product.[26] As such, company B could simply mimic the patent and avoid liability due to an insubstantial change in the flux. The majority in *Festo* considers such a result an appropriate outcome of a patent system that promotes certainty. This Court in *Graver Tank*, however, thought that it would be "difficult to conceive of a case more appropriate for application of the doctrine of equivalents." 339 U.S. at 612.

Now consider the same example under a flexible bar approach. Company B's choices would be different because of the stronger protection afforded the patent. In such a case,

---

[26] *Accord Festo*, 234 F.3d at 600-01 ("Under the majorities approach, anyone who wants to steal a patentee's technology need only review the prosecution history to identify patentability-related amendments and then make a trivial modification. . . . All other limitations may be copied precisely.") (Michel, J., concurring-in-part, dissenting-in-part).

company B could either (i) seek a license from the patentee or (ii) invest in research and develop a product substantially outside the scope of the claim. These choices facing company B are the choices intended by the Constitution. Specifically, requiring competitors to seek a license gives effect to the patent grant. Indeed, this Court must be mindful that the Constitutional patent grant is in fact a limited right to exclude other from making, using, selling, or importing the patented product and its equivalents.[27] The flexible bar approach clearly places control over the patented invention and its equivalents in the hands of the patentee.[28]

The second choice facing company B is also a result intended by the Constitution. Indeed, because the competitor must stay farther away from the literal language of the claims and their equivalents, any new product will truly have to be innovative. Otherwise, the competitor will risk infringing the patent. The competitor may also avoid the patent by practicing the prior art.[29] Under either scenario, the patentee obtains meaningful patent protection and the competitor has viable alternatives.

The policy concerns argued by the *Festo* majority -- clarity and predictability from notice -- should not override the Constitution. Accordingly, this Court must maintain a

---

[27] *See* Title 35, United States Code

[28] *See Festo*, 234 F.3d at 640 ("The patent system provides weight on the side of the innovator") (Newman, J., concurring-in-part, dissenting-in-part).

[29] *See Graham v. John Deere Co.*, 383 U.S. 1, 6 (1966) ("Congress may not authorize the issuance of patents whose effects are to remove existent knowledge from the public domain, or to restrict free access to materials already available."); *accord Westinghouse Elec. & Mfg. Co. v. Formica Insulation Co.*, 266 U.S. 342, 351 (1924) ("[T]he state of the art may be used to construe and narrow the claims of the patent, conceding their validity.").

strong patent system in order to give effect to the Constitution. Anything less would render the patentee's right to exclude a "hollow and useless thing." *Graver Tank*, 339 U.S. at 607.

II. *Festo* Will Increase The Costs of Patent Prosecution, Only To Hurt Individual Inventors and Small Businesses

As detailed above, *Festo* will certainly add complexity to patent prosecution. And, this complexity will invariably translate into higher costs to prosecute a patent.[30] For example, in order to file a claim that does not read on the prior art, the applicant must in the first instance have a solid understanding of the prior art. This costs money. Even in less complex technologies, a thorough, quality prior art search and novelty opinion normally costs a few thousand dollars. This is not a trivial amount from the viewpoint of an individual inventor or a small company.[31]

Once the search is complete, the applicant still must draft a set of claims narrowly tailored to avoid any patentability rejections, including those under 35 U.S.C. §§ 102, 103 and 112.[32] As any practitioner can attest, claim drafting is a very complex process that requires a thorough knowledge of the art and a level of skill that only experience can bring. In other words, the applicant is going to need

---

[30] *Festo*, 234 F.3d at 624 ("This will result in protracted prosecution and dramatically increased costs for many applications.) (Linn, J., concurring-in-part, dissenting-in-part).

[31] *See generally* Note, *In the Process of Controverting Its Constitutionally Given Purpose The U.S. Patent System Discriminates Against Inventors With Limited Financial Means*, 11 Law & Ineq. 565 (1993).

[32] Whether "a substantial reason relating to patentability" as a practical matter will include more than sections 102, 103 and 112 is not clear under *Festo*.

sophisticated patent counsel. Again, this costs money. Most skilled patent prosecutors charge several thousands of dollars to draft and file a patent application, exclusive of filing fees. Such costs alone can weigh heavily on the decision of an individual inventor or small company whether to even file for patent protection.

Once the application is filed, the applicant will still need to respond to the Patent Office. Because most, if not all, rejections are now a potential bar, the applicant will be able to make very few amendments. As such, the applicant will have limited options when faced with a patentability rejection.[33] One such option is to simply argue against the rejection, without any amendments, and hope that the examiner allows the claim to issue. However, this option will raise the possibility of an argument-based estoppel which, presumably,[34] will also invoke a complete bar.

Another option is to simply bypass the rejection by abandoning the application and filing a new one. The applicant could then present claims in the new application that are crafted to avoid the prior rejection. This, however, may also raise a complete bar under *Festo*.[35] Yet another option -- the safest route -- would be to appeal the rejection

---

[33] Indeed, some applicants may simply quit when faced with a patentability rejection. *See Festo*, 234 F.3d at 618 ("[T]his court's imposition of a complete bar creates a perverse incentive for patent applicants, *particularly those who are financially unable to invoke the appeals process*, to simply abandon their applications.") (Michel, J, concurring-in-part, dissenting-in-part) (emphasis added).

[34] The Federal Circuit did not squarely address the limiting effects of argument-based estoppel, although the opinion suggests that it too will be applied under a complete bar approach. *See Festo*, 234 F.3d at 568-69.

[35] Although not specifically addressed in Festo, it appears that such action would be considered a "voluntary amendment" under *Festo*, thereby invoking a complete bar.

to the Board of Patent Appeals and Interferences or, if unsuccessful, to the federal courts. Each of these options, especially the latter, will require the time and expense of sophisticated patent counsel. The expense and complexity of either option will be a significant burden to individual inventors and small businesses.[36] These burdens will not, however, have the same impact for wealthy corporations.

In the end, the only effect of *Festo* upon wealthy corporations will be an increase in their patent prosecution budgets. Specifically, corporations with large prosecution budgets will more readily be able to adapt to the new rules fashioned by *Festo*. Indeed, they may accrue new benefits not realized under the old rules. This point was raised in the concurring opinion of Judge Plager:

> Patent counsels may decide that past practice gives up too much under the new rules, and instead may start claiming narrowly with the hope of avoiding rejections and consequent amendments . . .
>
> An unintended consequence, however, may be that patent litigation will lean ever more heavily on the doctrine of equivalents . . . Since today's decision does not change the basic rule of analysis for infringement under the doctrine of equivalents, the outcome of those cases will continue to be tested under the pre-existing "insubstantial differences" and its surrogate "function-way-result," with

---

[36] *See Festo*, 234 F.3d at 624 ("In my view, this will most detrimentally impact individual inventors and start-up companies, and may have the effect of impeding, not advancing, technological progress, contrary to the purpose of the patent system.") (Linn, J., concurring-in-part, dissenting-in-part).

all the game-playing those indeterminate phrases provide. *Festo*, 234 F.3d at 592-93.

Moreover, wealthy corporations will have the means to file a large number of narrow claims that will give them patent scope commensurate to the traditional practice of filing only a few broad claims. If these claims pass through the Patent Office unamended -- as could be the case -- then the expectations of the majority in *Festo* for more certainty in claim scope will certainly go unmet.

III. Minority Businesses Will Be More Profoundly Impacted By *Festo*

Festo's increased patent prosecution costs will have a more profound impact upon minority businesses. This is because these businesses have traditionally had the least access to capital, a fact that has been well studied and chronicled:

> Research by the Milken Institute, the Federal Reserve Bank and others have demonstrated how constrained minority businesses are by unequal access to capital. Minority firms receive just 2% of all private equity investments and only 3% of the federal government's Small Business Investment Corp. dollars.[37]

Moreover, this lack of capital has normally meant that many minority businesses are barely able to stay afloat, let alone afford sophisticated patent counsel. When faced with an economic choice between operating expenses or patent

---

[37] Glenn Yago, *A Flourishing Business Base Needs Minority Entrepreneurs*, L.A. Times, April 23, 2001, at B7.

protection, the logical choice of most businesses would be to not file for patent protection. This is unfortunate. Patent rights are important Constitutional rights for all United States citizens.[38] Moreover, the technological prominence of the United States depends upon contributions from every segment of our society. No group has a monopoly on creativity. As such, the Constitutional purpose of the patent system can only be achieved by providing meaningful access to the patent system for everyone. The Constitution aims for nothing less.

CONCLUSION

For all of the foregoing reasons, *amicus* respectfully urges that the judgment of the United States Court of Appeals for the Federal Circuit be reversed.

---

[38] *See* Note, *In the Process of Controverting Its Constitutionally Given Purpose The U.S. Patent System Discriminates Against Inventors With Limited Financial Means*, 11 Law & Ineq. 565, 577 (1993) ("[T]he patent right to exclude originates in the Constitution; thus, every American has a right to an equal opportunity to acquire it. . . . [W]hen everyone with a patentable invention does not have an equal opportunity to acquire patent rights, the purpose of the patent system is undermined.").

Respectfully Submitted,

John Moses
Millen, White, Zelano & Branigan, P.C.
Arlington Court House Plaza 1
2200 Clarendon Blvd
Suite 1400
Arlington, Virginia 22201
(703) 243-6333

Edward W. Gray, Jr.
Counsel of Record
Kendrew H. Colton
Fitch, Even, Tabin & Flannery
1801 K Street, NW
Suite 401L
Washington DC 20006
(202) 419-7000

DATED: AUGUST 30, 2001

AUG 31 2001

No. 00-1543

Supreme Court, U.S.
FILED
AUG 31 2001
CLERK

IN THE

Supreme Court of the United States

FESTO CORPORATION,

Petitioner,

v.

SHOKETSU KINZOKU KOGYO KABUSHIKI CO., LTD a/k/a SMC CORPORATION AND SMC PNEUMATICS

Respondent.

ON WRIT OF CERTIORARI TO THE UNITED STATES COURT OF APPEALS FOR THE FEDERAL CIRCUIT

BRIEF OF AMICI CURIAE INTELLECTUAL PROPERTY CREATORS AND THE SOCIETY OF AMATEUR SCIENTISTS IN SUPPORT OF PETITIONER

STEVEN L. WINTER
Brooklyn Law School
250 Joralemon Street
Brooklyn, NY 11201
(718) 780-7550

Counsel for Amici

38 pp

TABLE OF CONTENTS

Table of Authorities ii

STATEMENT OF INTEREST OF AMICI 1

SUMMARY OF ARGUMENT 3

ARGUMENT 5

I. THE EFFECT OF THE DECISION BELOW WILL BE A NET DECREASE IN SCIENTIFIC AND TECHNOLOGICAL INNOVATION 5

II. RELIANCE ON THE LITERAL LANGUAGE OF THE PATENT IS MISPLACED, IS AS LIKELY TO UNDERMINE CERTAINTY AS ADVANCE IT, AND WILL CERTAINLY LEAD TO ARBITRARY RESULTS 17

CONCLUSION 30

TABLE OF AUTHORITIES

Cases:

Colorado v. Connelly, 479 U.S. 157 (1986) 19 n.36

Cooper v. Dasher, 290 U.S. 106 (1933) 17 n.31

Culombe v. Connecticut, 367 U.S. 568 (1961) 20 n.37

Festo Corp. v. Shoketsu Kinzoku Kogyo Kabushiki Co., Ltd., 234 F.3d 558 (Fed. Cir. 2000) 3-5, 5-6 nn.2-3, 9 n.7, 10 n.10, 27 n.53

Fonar Corp. v. General Electric Co., 107 F.3d 1543 (Fed. Cir. 1997), *cert. denied*, 522 U.S. 908 (1997) 2

Graver Tank & Mfg. Co. v. Linde Air Products Co., 339 U.S. 605 (1950) . . . . . 25 & n.47

Halliburton Oil Well Cementing Co. v. Walker, 329 U.S. 1 (1946) 25 n.47

Machine Co. v. Murphy, 97 U.S. 120 (1878) . . . . . 25 & n.46

McCulloch v. Maryland, 17 U.S. (4 Wheat.) 316 (1819) 17 n.30

Miller v. Fenton, 474 U.S. 104 (1985) 19 n.36

Monaco v. Mississippi, 292 U.S. 313 (1934) 17 n.30

Royal Typewriter Co. v. Remington Rand, Inc., 168 F.2d 691 (2d Cir. 1948) 9 n.8, 29 nn.60-61

Telectronics Proprietary, Ltd. v. Medtronic, Inc., 687 F. Supp. 832 (S.D.N.Y. 1988) 2

Towne v. Eisner, 245 U.S. 418 (1918) 24 n.44

Warner-Jenkinson Co. v. Hilton Davis Chemical Co., 520 U.S. 17 (1997) . . . . . 25-26 nn.47-48 & 50-51

Winans v. Denmead, 56 U.S. (15 How.) 330 (1853) 5 n.1, 9 nn.8-9

Wright Co. v. Herring-Curtiss Co., 177 Fed. 257 (W.D.N.Y 1910), *rev'd*, 180 F. 110 (2d Cir. 1910) 15 n.25

Wright Co. v. Herring-Curtiss Co., 204 F. 597 (W.D.N.Y. 1913), *aff'd*, 211 F. 654 (2d Cir. 1914) 15 n.25, 16 n.26

Wright Co. v. Paulhan, 177 F. 261 (S.D.N.Y 1910) . 16 n.27

Statutes:

35 U.S.C. § 112 (2001) 25 n.47

Other Authorities:

Braben, Donald, *To Be a Scientist: The Spirit of Adventure in Science and Technology* (1992) 28 n.57

Coase, Ronald, *The Problem of Social Cost*, reprinted in *The Firm, the Market, and the Law* (1988) 6-7 n.4

Crouch, Tom, *The Bishop's Boys: A Life of Wilbur and Orville Wright* (1989) 14 nn.23-24, 16 n.27

Dannon, Gene, *Leo Szilard Online*, http://www.dannen.com/ae-fdr.html 11 n.13

Dreyfus, Hubert L., *What Computers* St.ll *Can't Do: A Critique of Artificial Reason* (2d ed. 1979) 18 n.34

Everson, George, *The Story of Television: The Life of Philo T. Farnsworth* (1949) 16 nn.28-29

Godfrey, Donald, *Philo T. Farnsworth: The Father of Television* (2001) . . . . . 16 n. 28

Hart, H.L.A., *The Concept of Law* (1961) 26 n.52

Holland, Dorothy & Naomi Quinn, *Culture and Cognition*, in *Cultural Models in Language and Thought* (D. Holland & N. Quinn eds., 1987) 18 n.34

Holmes, Oliver Wendell Jr., *The Common Law* (Mark Howe ed. 1963) (1881) 26 n.49

Howard, Fred, *Wilbur and Orville: A Biography of the Wright Brothers* (1987) 14 n.23, 16 n.27

Kuhn, Thomas S., *The Structure of Scientific Revolutions* (2d ed. 1970) . . . . . 13 & n.21, 23 & n.41, 28 n.54

Kuhn, Thomas S., *Second Thoughts on Paradigms*, in *The Structure of Scientific Theories* (Frederick Suppe ed., 1972) 27 n.52

Kuhn, Thomas S., *Black Body Theory and the Quantum Discontinuity, 1894-1912* (1978) 28 n.55

Lakoff, George, *Women, Fire, and Dangerous Things: What Categories Reveal about the Mind* (1987) 13-14 n.22, 18 n.33

Lanouette, William, *Genius in the Shadows: A Biography of Leo Szilard, The Man Behind the Bomb* (1994) 11 n.13

López,Gerald P. *Lay Lawyering*, 32 UCLA L. Rev. 1 (1984) 14 n.22

Markey, Howard T., *Some Patent Problems: Philosophical, Philological, and Procedural*, 80 F.R.D. 203 (1979) . . . . . 10 & nn.10-11

Murray, Ernest, *Commentary: I'm Glad I Didn't Say That*, Cox News Service, May 14, 1999 . . . . . 13 n.20

Nutt, Amy Ellis, *Indispensable Post-it Notes Didn't Stick at First; 20 Years Later, Billions Have Been Sold, Posted*, The Times-Picayune, April 16, 2000 . . . . . 28 n.56

Perkins, David N. & Robert J. Weber, *Conclusion: Effable Invention*, in, *Inventive Minds: Creativity in Technology* (R.J. Weber & D.N. Perkins eds.,1992) 28 n.57

Popper, Karl R., *The Logic of Scientific Discovery* (1992) 22 n.40

Posner, Richard A., *The Problems of Jurisprudence* (1990) 26 n.51

Quigg, Donald, *Technology on the Move: The Role of Patents*, in *Inventive Minds: Creativity in Technology* (R. Weber & D. Perkins eds., 1992) . . . . . 29 nn. 58-59

Random House Dictionary of the English Language (2d ed. unabridged 1987) 20 n.39

Roberts, Edward, *Influences on Innovation: Extrapolations to Biomedical Technology*, in *Biomedical Innovation* (E. Roberts, R. Levy, S. Finkelstein, J. Moskowitz, & E. Sondick, eds. 1981) 11 n.12

Root-Bernstein, Robert Scott, *Discovering: Inventing and Solving Problems on the Frontiers of Scientific Knowledge* (1989) . . . . 11 n.14, 12 & n.18, 13 n.21, 28 n.57

Rosch, Eleanor, *Principles of Categorization*, in *Cognition and Categorization* (E. Rosch & B. Lloyd eds., 1978) . . . 18 n.33

Schauer, Frederick, *Formalism*, 97 Yale L.J. 509 (1988) 20 n.38

Schwarcz, Joe, *Everyday Chemistry: What Makes a Situation Sticky*, The Washington Post, December 8, 1999 . . . 28 n.56

Schwartz, Evan I., *Who Really Invented Television?*, Technology Review, Sept./Oct. 2000, http://www.technologyreview.com/magazine/sep00/schwartz.asp 16 n.28

Sex and Physics: A Talk with Dennis Overbye, The Edge, April 2, 2001, http://www.edge.org/3rd_culture/overbye/overbye_index.html 12 n.17

Sharpe, Rosalinde, *The Post-it Is that Rare Thing: A Genuine Invention*, The Independent (London), April 20, 1996 . . . . . 12 n.19

Stanley, Autumn, *Mothers and Daughters of Invention: Notes for a Revised History of Technology* (1993) 11 n.14

Stinchcombe, Arthur L., *When Formality Works: Authority and Abstraction in Law and Organization* (Univ. of Chicago Press, 2002) . . . . . 23-25 & nn.42-45

Weart, Spencer R. & Gertrud Weiss Szilard, eds., *Leo Szilard: His Version of the Facts—Selected Recollections and Correspondence* (1978) 11 n.13

Wild, John J., *The Origin of Soft-Tissue Ultrasonic Echoing and Early Instrumental Application to Chemical Medicine*, in *Inventive Minds: Creativity in Technology* (R. Weber & D. Perkins eds., 1992) 12 n.16

Winter, Steven L., *A Clearing in the Forest: Law, Life, and Mind* (Univ. of Chicago Press, 2001) 13 n.22, 18 nn.32, 18 nn.34-35, 20 n.38, 26 n.49

Winter, Steven L., *Making the Familiar Conventional Again*, 99 MICH. L. REV. ___ (2001) 14 n.22

Wolpert, Lewis, & Alison Richards, *Passionate Minds: The Inner World of Scientists* (1997) 12 n.15

Worrel, Rodney, *The Wright Brothers' Pioneer Patent*, 65 J. Am. Bar Assoc.1512 (1979) 14 n.23

No. 00-1543

In the

Supreme Court of the United States

FESTO CORPORATION,

Petitioner,

v.

SHOKETSU KINZOKU KOGYO KABUSHIKI CO., LTD a/k/a
SMC CORPORATION AND SMC PNEUMATICS

Respondent.

ON WRIT OF CERTIORARI TO THE UNITED STATES COURT OF
APPEALS FOR THE FEDERAL CIRCUIT

STATEMENT OF INTEREST OF AMICI*

Intellectual Property Creators (IPC) is a non-profit organization founded in 1994 to promote the public interest in technological innovation by assisting independent entrepeneurial inventors. IPC serves as a clearinghouse for inventors on matters of patent law and enforcement. It also seeks to influence law and

---

* Letters from the parties consenting to the filing of this brief have been filed with the Clerk of the Court. This brief was not authored in whole or in part by counsel for either of the parties.

public policy to encourage innovation, presenting the perspective of the small inventor before Congress and as *amicus curiae* before this Court and the lower federal courts.

Among IPC's founding members are several inductees in the National Inventors Hall of Fame. The founding members include: Dr. Raymond Damadian, the inventor of magnetic resonance scanning; Dr. Wilson Greatbatch, the inventor of the implantable cardiac pacemaker; Stan Mason, the inventor of Masonware, the granola bar, and the first shaped, disposable diapers (among others); and Paul Heckel, a software developer, inventor, and author. Many of IPC's members or their assigns have been involved in litigation to enforce their patents against would-be copyists. *See, e.g., Fonar Corp. v. General Electric Co.*, 107 F.3d 1543 (Fed. Cir. 1997), *cert. denied*, 522 U.S. 908 (1997) (Dr. Damadian); *Telectronics Proprietary, Ltd. v. Medtronic, Inc.*, 687 F. Supp. 832 (S.D.N.Y. 1988) (successor to Greatbatch patent).

The Society for Amateur Scientists is a membership organization founded in 1994 and incorporated in the State of California as a non-profit scientific research and educational corporation. It joins world-class professionals and citizen scientists with ordinary people to promote the spirit of scientific discovery. Officers and members of the Board of Advisors include distinguished scientists, inventors, and academics including a Nobel Laureate, Dr. Douglas D. Osheroff, a winner of the Guggenheim Medal, Dr. Paul MacCready, many John D. and Catherine T. MacArthur Fellows, including Dr. Shawn Carlson and Professor Robert Scott Root-Bernstein, and several members of the National Academy of Sciences.

This case presents questions vital to the effectiveness of the patent system in promoting technological innovation. Amici bring the unique perspective of the independent scientist and inventor who, for reasons developed below, play a critical role in the advancement of science and technology.

SUMMARY OF ARGUMENT

The Federal Circuit's en banc decision in *Festo* severely limits —indeed, for all practical purposes eviscerates—the more than 150-year-old doctrine of equivalents. This will prove devastating to the independent scientist and small inventor, putting at risk the flow of new inventions that has contributed so much to America's preeminence in science and technology. Studies in the history and sociology of innovation have repeatedly shown that the independent or maverick "outsider" is one of the most important sources of scientific and technological advancement. For reasons well documented both in the philosophy of science and, more recently, in cognitive science, it is those who toil outside the mainstream of established institutions and assumptions who are best able to "think outside the box" and envision new ways of doing things. The abrupt and ill-considered change in the incentive structure worked by the decision below will be particularly devastating to such innovators and, therefore, is likely to have a deleterious effect on America's competitive position.

The decision below privileges certainty for the copyist or follow-on producer over certainty and security for the inventor or creator. This creates a perverse incentive structure: It encourages the exploitation of discoveries made by others and—simultaneously and necessarily—reduces incentives for the successful inventor to come up with those discoveries in the first place. This misallocation of incentives is exacerbated in the case of independent, entrepeneurial inventors who are likely to be undercapitalized relative to the manufacturing corporations responsible for follow-on products. The manufacturer can already compete on size, service, volume, and financing. Under the decision below, it can now add to its competitive advantage the ability (in effect) to allocate the risks and costs of discovery to the original inventor. Because the decision below encourages free riding by follow-on producers and actively decreases incentives to inven-

tors, the net effect can only be an overall decrease in innovation.

Without the adequate patent protections embodied in the doctrine of equivalents, the independent inventor has little or no hope of reaping the benefits of his or her creation. Indeed, had *Festo* been the law in 1914, the Wright Brothers would never have seen a penny from their invention of the airplane.

The decision below trades adequate incentives for inventors for the illusory certainty of the literal language of the patent. For the better part of 200 years, our best judges—Marshall, Holmes, Hughes, Hand, Cardozo, Frankfurter—have recognized and cautioned against the deceptive simplicity of literal language. Indeed, until the decision below, one might have said that the doctrine of equivalents itself represented the time-tested wisdom of 150 years of judicial experience with the limitations of literal language. One might have thought that such a decisive break with the received wisdom would be justified by some new, more scientific, more precise understanding of language. But just the opposite is true: The striking advances in cognitive science over the last thirty years have revealed both the remarkable complexity of ordinary language and the degree to which the everyday experience of literal language actually reflects rather complicated cognitive processes. Thus, as Judge Linn argued in partial dissent below, the en banc majority's rigid, bright-line rule, "simple as it is hoped to be" (*Festo Corp. v. Shoketsu Kinzoku Kogyo Kabushiki Co., Ltd.*, 234 F.3d 558, 620 (Fed. Cir. 2000)), can only prove illusive in application. Studies in the cognitive sciences have shown that the necessarily flexible and adaptive way in which human minds *actually* work depends upon purpose, context, and function. Because these considerations are integral to meaning, there can be no necessary relation between technical precision and legal certainty. To the contrary, reliance on literal meaning is as likely to undermine certainty as promote it. To paraphrase Judge Hand, this is the very phenomenon that led to the doctrine of equivalents in the first place.

ARGUMENT

I. THE EFFECT OF THE DECISION BELOW WILL BE A NET DECREASE IN SCIENTIFIC AND TECHNOLOGICAL INNOVATION

In 1853, Justice Curtis described as an already "familiar rule" what has since come to be known as the "doctrine of equivalents."[1] The Federal Circuit's en banc decision in *Festo* severely limits that rule by: (1) extending the doctrine of prosecution history estoppel to any amendment relating to patentability; (2) creating a presumtion that *any* amendment is related to patentability; (3) making that presumption largely irrebutable by barring evidence outside the prosecution history record that might bear on the reason for amendment; and (4) ruling that "once an element of a claim is narrowed by amendment for a reason related to patentability, that element's scope of coverage will not extend beyond its literal terms."[2] The court below held, in other words, that estoppel acts as a "complete bar" to the doctrine of equivalents. Since virtually all patents are amended during the application process, the ruling below would—for all practical purposes—repeal the doctrine of equivalents.

---

[1] *Winans v. Denmead*, 56 U.S. (15 How.) 330, 342 (1853):

> It is generally true, when a patentee describes a machine, . . . that he is understood to intend to claim, and does by law actually cover, not only the precise forms he has described, but all other forms which embody his invention; it being a familiar rule that, to copy the principle or mode of operation described, is an infringement, although such copy should be totally unlike the original in form or proportions.

[2] *Festo Corp. v. Shoketsu Kinzoku Kogyo Kabushiki Co., Ltd.*, 234 F.3d 558, 577, 566, 568, 569 (Fed. Cir. 2000).

In support of this radical reformation of the patent laws, the en banc court offered the beguilingly simplistic assertion that its new rule would encourage innovation. It reasoned that the certainty and predictability of a complete bar would "stimulate investment in improvements and design-arounds because the risk of infringement will be easier to determine."[3]

This conclusion is almost certainly wrong. Logically, the complete bar approach can have only one of two consequences: *Either* (1) it will work no change in the level of innovation, just shifting the risk and other costs of innovation onto the party —in this case, the original inventor—least able to bear it; *or* (2) it will result in a net decrease in innovation because, simply put, the effect of this cost-shifting will be that there are fewer inventions to improve or design-around.

The court below reasoned that the certainty of a complete bar will reduce the transaction costs of litigation over the scope of the patent. But, this conclusion assumes that the relevant choice is between litigation and no-litigation; it already presupposes the point of view of the copyist. From the point of view of the patent holder, the relevant choice is between license and no-license. To put the point another way, as long as there is a profit to be extracted from an improvement or design-around, the parties (i.e., the inventor and the follow-on producer) have adequate incentive to bargain to their mutual advantage.[4] If, for example,

---

[3] *Id.* at 577. The court reasoned that

> under the complete bar approach, technological advances that would have lain in the unknown, undefined zone around the literal terms of a narrowed claim under the flexible bar approach will not go wasted and undeveloped due to fear of litigation. The public will be free to improve on the patented technology and design around it without being inhibited by the threat of a lawsuit. . . .

[4] *Cf.* Ronald H. Coase, *The Problem of Social Cost,* reprinted in R.H. COASE, THE FIRM, THE MARKET, AND THE LAW 95-156 (1988) (first appearing in 1960). The exception to the statement in the text is the set of cases where the transaction costs of negotiation exceed the value of the improvement. Given the profits attainable through mass production over the life of the patent, however, this is not likely to be a large set of cases.

the improvement or design-around enables the producer to manufacture the item more cheaply, then it can bargain with the inventor for a license to produce.[5] With or without a complete bar, worthwhile improvements and design-arounds will occur.[6]

What the ruling below does—and, to be clear, *all* it does—is shift the costs of development (including the initial risk of failure) onto the inventor. The court below took a myopic view, considering risk only from the perspective of a copyist making a decision to manufacture a potentially infringing product. But any reasonable analysis of the relationship between risk, incentive structure, and innovation must consider *all* the risks, including the substantial risks that the inventor takes in pursuing an invention.

Ex ante, there is no difference between a 10% chance of a $100 profit and a 100% chance of $10 profit. The process of

---

[5] Conversely, if the value of the invention exceeds the value of the design-around or improvement, the inventor can bargain with the manufacturer *not* to produce. This latter point makes plain exactly how much of a red herring the *Festo* court's transaction cost analyis really is: The potential producer (who, obviously, already knows about the invention) can easily identify and engage in negotiations with the inventor. But the inventor would need first to identify and then to bargain with each and every potential producer. Analyzed from a Coasian perspective, the ruling below shifts the costs to the party who faces the highest information and transaction costs and who is otherwise least able to bear them.

It remains true that, as the court below observed, there may be uncertainty about the scope of a patent. But there is no reason to think that uncertainty would fail to be reflected in the price of any negotiated license.

[6] Of course, if the design-around adds no value—i.e., if it is merely an attempt to avoid patent liability—then there is no real public interest in its production.

developing and bringing a new product to market is notoriously filled with uncertainties Will it work? Is there a market for the product? Will some competing product prove better or more acceptable to the consumer? Can the product be manufactured and delivered to consumers in a cost-effective manner? Under the prior patent regime, the inventor assumes these risks in the hope of obtaining monopoly profits for the period of any resulting patent. Once the product has been perfected and a market identified, the follow-on producer who can successfully exploit this market does so with reduced risk and—under the prior patent regime—with a profit margin concomitantly reduced by the royalties it pays to the patent holder. The ruling below inverts this scheme. Under that ruling, the follow-on producer faces 10% of the risk and is nevertheless free to take the lion's share of the profits. The inventor, who faced all of the risk, is left holding the bag.

Thus, the decision below encourages free riding by follow-on producers and sharply reduces incentives to inventors. It is elementary economics that if you increase the cost of (or reduce the rewards for) something, less of that thing will be produced. The net effect of the decision below can only be an overall decrease in innovation.

It might be argued that, even under the ruling below, inventors still retain the benefits of the monopoly afforded by the literal terms of the patent and, therefore, that they will have sufficient incentive to innovate. But this argument fails for at least three reasons.

First: The ruling below puts a premium on avoiding amendments during the application process so as not to lose the benefits of the doctrine of equivalents. The stated purpose is to reduce the transaction costs of subsequent litigation to clarify the scope of the patent. In effect, then, the ruling below front-ends the costs of patent litigation onto the application process—increased costs that the small inventors can ill afford, as Judge Linn

observed.[7] Thus, even on this more favorable assumption, it remains true that the effect of the decision below will be to depress innovation because inventors face sharply increased costs.

Second: As a practical matter, the literal terms of the patent will provide no protection to the patent holder because, as Judge Hand observed, "it is always, or almost always, possible to change the form of these as they appear, and yet cull the full advantage of the discovery."[8] Under the ruling below, the inventor faces almost certain economic failure. Previously, the doctrine of equivalents protected the patent holder from copies "which, substantially on the same principle and in the same mode of operation, accomplish the same result . . . ."[9] By making the literal terms of the patent the touchstone, the decision below frees the copyist to design a revised product that achieves exactly the same

---

[7] *See Festo*, 234 F.3d at 620 (Linn, C. J., concurring in part and dissenting in part) (noting that the majority's "new bright line rule . . . wrongfully sets in place a regime that increases the cost and complexity of patent prosecution to the detriment of individual inventors, start-up companies, and others unable to bear these increased costs.").

These increased costs, moreover, are economically inefficient. Currently, only a small percentage of patents are ever litigated. But inventors who hope to have their patents benefit from the protections of the doctrine of equivalents will be incurring these increased costs in *every* case.

[8] *Royal Typewriter Co. v. Remington Rand, Inc.*, 168 F.2d 691, 693 (2d Cir. 1948); *see also Winans*, 56 U.S. at 342-43 ("[T]he property of inventors would be valueless, if it were enough for the defendant to say, your improvement consisted in a change of form; you describe and claim but one form; I have not taken that, and so have not infringed.").

[9] *Winans*, 56 U.S. at 346. Under the decision below, inventors will retain value in their patents only to the extent that the original invention maintains some marginal practical or technological advantage over the copy. But this will often be illusive. Consider the facts in *Winans*: Plaintiff had invented and patented a new railroad car for carrying coal whose circular design better distributed the pressure of the load thus doubling each car's capacity. Defendants then made an octagonal car that "for all practical purposes . . . was as good as the other. . . ." *Id.* at 340.

results as the patented device in exactly the same way without fear of patent litigation. The copyist will always be able to produce this revised product more cheaply than the original inventor because—even if all other things were equal—it can free ride on the inventor's research and development costs.[10]

Third: All other things are rarely equal. The fact of the matter is that the inventor is already at a significant disadvantage relative to to follow-on producer. On one hand, as Chief Judge Markey has observed:

> Many giant corporations have no need of a patent system. They may obtain patents, but only as a defense against some little machine shop operator who might otherwise invent and patent something the public would demand and the big corporation would have to negotiate for, instead of just adding the item to its product line. Many large corporations would be glad to compete on size, nationwide service, high volume, strong finance, and prompt delivery. They can kill off smaller competitors on any of those bases, unless the small competitor has a patent on a product somebody wants to buy.[11]

---

[10] As Judge Linn argued below:

> [C]onstraining limitations amended for a statutory purpose to their literal terms, is likely to encourage insubstantial changes to an established product, rather than investment in break-through technological advancements. Such a rule, therefore, promotes free riding and undercuts the return on a patentee's investment.

Festo, 234 F.3d at 627; *cf.* Hon. Howard T. Markey, *Some Patent Problems: Philosophical, Philological, and Procedural*, 80 F.R.D. 203, 210 (1979) ("Patents are not favored by commercial jackals who want to jump in at the last minute and profit from the efforts of others.").

[11] Markey, *surpra* note 10, at 210. So, too, large corporations have less of

On the other hand, many important industrial innovations are made by individual inventors or small firms who then license their work to big corporations.[12] It may be conventional to think of corporate research and development departments such as Bell Labs or government programs such as the Manhattan Project as the source of major scientific and technological innovations. But the fact of the matter is otherwise. The Manhattan Project itself owed its genesis to the discoveries of Leo Szilard, a little known scientist whose work was first brought to official attention in a 1939 letter from Albert Einstein to President Roosevelt.[13] In fact, a surprising number of inventions and a disproportionate amount of the truly innovative science comes from independents with extremely limited resources operating outside established institutions (and, often, at the geographical margins as well).[14] Some

---

a need for the doctrine of equivalents because they have the resources to file, if necessary, hundreds of patents around the issue.

[12] Edward B. Roberts, *Influences on Innovation: Extrapolations to Biomedical Technology*, in BIOMEDICAL INNOVATION 50, 66 (Edward B. Roberts, Robert I. Levy, Stan N. Finkelstein, Jay Moskowitz, & Edward J. Sondick, eds. 1981).

[13] WILLIAM LANOUETTE, GENIUS IN THE SHADOWS: A BIOGRAPHY OF LEO SZILARD, THE MAN BEHIND THE BOMB 194-213 (1994); *see also* SPENCER R. WEART & GERTRUD WEISS SZILARD, EDS., LEO SZILARD: HIS VERSION OF THE FACTS—SELECTED RECOLLECTIONS AND CORRESPONDENCE (1978). Szilard, once a student of Einstein's, patented a linear accelerator in 1928 and the cyclotron in 1929, filed for a patent on the electron microscope in 1931, and patented the nuclear chain reaction in 1934 and the nuclear reactor (with Enrico Fermi) in 1954. LANOUETTE, *supra*, at 94, 101-02, 139-58, & 331. A facsimile of Einstein's letter to the President can be found online at: Gene Dannon, *Leo Szilard Online*, http://www.dannen.com/ae-fdr.html.

[14] ROBERT S. ROOT-BERNSTEIN, DISCOVERING: INVENTING AND SOLVING PROBLEMS ON THE FRONTIERS OF SCIENTIFIC KNOWLEDGE 366-72 (1989). *See also* AUTUMN STANLEY, MOTHERS AND DAUGHTERS OF INVENTION: NOTES FOR A REVISED HISTORY OF TECHNOLOGY (1993) (detailing the technological innovations made by women over the course of the centuries).

of these individuals are total outsiders or "mavericks" who work independently of or at odds with institutions; in addition to Szilard, examples include James Lovelock, the inventor of ultra-senstive chemical detectors,[15] and John J. Wild, the inventor of the sonagram.[16]

It is easy to see why outsiders would be more fecund sources of discovery and invention. For one thing, they are characterologically disposed to independent thinking.[17] For another, they operate free of the constraints of institutional arrangements, regulations, and expectations; as Root-Bernstein observes, "as long as the decisions concerning funding [are] bureaucratized there is no hope for the maverick. He will be selected out."[18] Einstein, for example, is said to have remarked that the best places for a scientist to work are the patent office or a lighthouse.[19]

Most importantly, it is generally only the outsider who is able to think outside the reigning scientific paradigms—i.e., the set of concepts, understandings, assumptions, frames of reference, habits of mind, ways of proceeding, and conventional wisdoms that constitue any professional community.[20] In his classic study of scientific revolutions, Thomas Kuhn observed that:

> Almost always the men who achieve these fundamental inventions . . . have been either very young or very new to the field whose paradigm they change. And perhaps the point need not have been made explicit, for obviously these are the men who, being little committed by prior practice to the traditional rules of normal science, are particularly likely to see that those rules no longer define a playable game and to conceive another set that can replace them.[21]

Kuhn's insights have been corroborated and extended by work in cognitive science that demonstrates both the degree to which our categories and concepts are entrenched and the ways in which they define our expectations and perceptions and, therefore, shape what we think possible, what we deem credible, what we perceive accurate, what we find persuasive.[22] For this reason, it

---

[15] LEWIS WOLPERT & ALISON RICHARDS, PASSIONATE MINDS: THE INNER WORLD OF SCIENTISTS 71-80 (1997).

[16] John J. Wild, *The Origin of Soft-Tissue Ultrasonic Echoing and Early Instrumental Application to Chemical Medicine*, in INVENTIVE MINDS: CREATIVITY IN TECHNOLOGY 115, 117-21 (Robert J. Weber & David N. Perkins eds., 1992) (hereinafter "WEBER & PERKINS").

[17] *See Sex and Physics: A Talk with Dennis Overbye*, The Edge, April 2, 2001 ("Would Einstein be a string theorist? Strings seem to have taken physics departments by storm and they are almost the only game in town, but Einstein had this deep-seated need to be an outsider.") available online at: http://www.edge.org/3rd_culture/overbye/overbye_index.html

[18] ROOT-BERNSTEIN, *supra* note 14, at 376.

[19] *Id.* at 392. 3M, a company known for its innovativeness, makes use of much the same insight with its policy permitting "bootlegging"—allowing researchers to spend 15 per cent of their time on their own projects. *See* Rosalinde Sharpe, *The Post-it Is that Rare Thing: A Genuine Invention*, The Independent (London), April 20, 1996, at 42.

[20] Spencer Silver (who invented the unique adhesives that led to the production of 3M's now ubiquitous "Post-it" notes) is reported to have said that: "If I had thought about it, I wouldn't have done the experiment. The literature was full of examples that said you can't do this." Ernest Murray, *Commentary: I'm Glad I Didn't Say That*, Cox News Service, May 14, 1999.

[21] THOMAS S. KUHN, THE STRUCTURE OF SCIENTIFIC REVOLUTIONS 90 (2d ed. 1970). Indeed, Kuhn added that: "This generalization about the role of youth in fundamental scientific research is so common as to be a cliché." *Id.* at 90 n.15. The principal exception to this rule of thumb is the scientist who returns to something of a novice by periodically changing fields. ROOT-BERNSTEIN, *supra* note 14, at 386-87.

[22] *See* STEVEN L. WINTER, A CLEARING IN THE FOREST: LAW, LIFE, AND MIND (forthcoming Univ. of Chicago Press, September 2001) (hereinafter "A CLEARING IN THE FOREST"); GEORGE LAKOFF, WOMEN, FIRE, AND DANGEROUS THINGS: WHAT CATEGORIES REVEAL ABOUT THE MIND

is often *only* the newcomer or outsider who is capable of "thinking outside the box" and seeing the way to true innovations. But such people are likely to have the least resources for coping with the competition of a potentially infringing product from a large corporate producer.

The experience of the Wright Brothers dramatically illustrates every aspect of the dynamics working against true innovators.[23] The airplane was the Wright's first patent. But their application was repeatedly rejected by the Patent Office,[24] and had to be amended several times. The mainstream view at the time was that the key to achieving flight was to solve the problem of aircraft stability. The Wrights rejected that conventional wisdom. Their research suggested that the key was to figure out how to achieve control of the plane. In the course of building a working airplane, the Wrights made many important inventions. But, the crucial one—still used in fixed-wing airplanes today—was the

---

(1987). As one early commentator explains, the world

> is never approached as if it were *sui generis*, but rather is seen through these stock structures. Once the principal features of a given phenomenon suggest a particular stock structure, that structure shapes our expectations and responses. This use of stock structures resolves ambiguity and complements "given" information with much "assumed" information.

Gerald P. López, *Lay Lawyering*, 32 UCLA L. REV. 1, 6 (1984). López's article is one of the first to apply cognitive science to law. For a chronology of the field, see Steven L. Winter, *Making the Familiar Conventional Again*, 99 MICH. L. REV. ___ (2001) (review essay).

[23] *See* Rodney Worrel, *The Wright Brothers' Pioneer Patent*, 65 J. AM. BAR ASSOC. 1512 (1979); TOM CROUCH, THE BISHOP'S BOYS: A LIFE OF WILBUR AND ORVILLE WRIGHT (1989); FRED HOWARD, WILBUR AND ORVILLE: A BIOGRAPHY OF THE WRIGHT BROTHERS (1987).

[24] Among the reasons for rejection given by the patent officer was that "the device described was clearly 'inoperative' and 'incapable of performing its intended function.'" CROUCH, *supra* note 23, at 246.

invention of wing-warping as a mechanism of control. This mechanism enabled them to warp an airplane's wings to change their angle of attack into the wind so as to bank the airplane to the right or left. This gave the pilot lateral control for turns and the ability to recover from instability caused by wind gusts. When the Wrights made their famous 59-second flight at Kitty Hawk, they had spent about $1100 to build their airplane. In contrast, the Aerodrome (which had ignominiously belly-flopped into the Potomac only a few weeks earlier) was built by Samuel Pierpoint Langley of the Smithsonian with a $50,000 grant from Congress.

In 1907, with the encouragement of Alexander Graham Bell, a motorcycle manufacturer named Glenn Curtiss entered the airplane manufacturing business with $360,000 in start-up funds raised from investors. Curtiss set out to design around the Wright's wing-warping patent. He invented and patented ailerons, which are control surfaces hinged to a wing's trailing edges. The Wrights sued. Henry Ford referred Curtiss to his patent litigator, W. Benton Crisp. The defense argued both that the Wright's invention was not novel and that Curtiss's ailerons (which were not connected to the rear rudder as was the Wright's wing-warping mechanism) were different in form and operation from the Wright's patent. The district court rejected both claims, holding that the Wright Brothers were "entitled to . . . the application of a range of equivalents that will include an aeroplane appropriating substantially the same instrumentalities and the same principle of operation."[25] Because Curtiss's ailerons operated together with the rudder to "restor[e] equilibrium in substantially

---

[25] *Wright Co. v. Herring-Curtiss Co.*, 204 F. 597, 606 (W.D.N.Y. 1913), *aff'd*, 211 F. 654 (2d Cir. 1914). *See also Wright Co. v. Herring-Curtiss Co.*, 177 F. 257 (W.D.N.Y 1910) (granting preliminary injunction), *rev'd*, 180 F. 111 (2d Cir. 1910) (reversing injunction because of "sharp conflict of evidence" such that "infringement was not so clearly established as to justify a preliminary injunction").

the same way," the court found that the Wright's patent had been infringed.[26] In a parallel case, Learned Hand found infringement on the same grounds.[27]

The Wright Brothers' story is in many ways typical of the difficulties faced by small inventors. Much the same story can be told with respect to Philo T. Farnsworth, the inventor of television.[28] The Wright Brothers' story is *not* typical, however, in one very significant respect: They succeeded where many other inventors fail. Farnsworth, for example, was not so fortunate despite initial success in patent litigation against RCA.[29] Amici are aware of scores of independent inventors who have asserted their patent and nevertheless suffered a similar fate. And, that was *with* the benefits of the doctrine of equivalents. Without it, independent inventors simply don't stand a chance.

---

[26] *Wright v. Herring-Curtiss*, 204 F. at 614.

[27] *Wright Co. v. Paulhan*, 177 F. 261 (S.D.N.Y 1910) (granting preliminary injunction). The Wright Brothers' saga did not end there, however. The Smithsonian let Curtiss rebuild Langley's Aerodrome to see if it could have flown in 1903 and thereby demonstrate the Wright Brothers' lack of priority. Curtiss reconstructed the plane using knowledge of aeronautics gained in the intervening years, making several changes from the original design. Even so, it was never clear whether the modified Aerodrome flew for it took off just outside camera range. The controversy over who flew first was not finally settled until 1942, 30 years after Wilbur had died of typhoid fever, when the Smithsonian published an article detailing the changes in design made by Curtis and admitting that the Wright Brothers were first. CROUCH, *supra* note 23, at 489; HOWARD, *supra* note 23, at 393.

[28] GEORGE EVERSON, THE STORY OF TELEVISION: THE LIFE OF PHILO T. FARNSWORTH, 152-154, 199-203 (1949); Evan I. Schwartz, *Who Really Invented Television?* Technology Review, September/October 2000, available online at: http://www.technologyreview.com/magazine/sep00/schwartz.asp. *See also* DONALD GODFREY, PHILO T. FARNSWORTH: THE FATHER OF TELEVISION (2001).

[29] EVERSON, *supra* note 29, at 214 (noting that RCA spent ten times what Farnsworth did and that: "We wisely did not venture to enter into competition with [RCA] in any field other than that of patent strength.").

II. RELIANCE ON THE LITERAL LANGUAGE OF THE PATENT IS MISPLACED, IS AS LIKELY TO UNDERMINE CERTAINTY AS ADVANCE IT, AND WILL CERTAINLY LEAD TO ARBITRARY RESULTS

The decision below trades adequate incentives for inventors for the illusory certainty of the literal language of the patent. Yet, as we have just seen, the doctrine of equivalents is itself the product of 150 years of accumulated judicial wisdom responding to the inadequacy of literal language as a protection for inventors. Such a decisive break with the received wisdom should, at the very least, be supported by some new, more scientific evidence about the efficacy of literal language. But just the opposite is true: Developments in cognitive science over the last thirty years have demonstrated that the everyday experience of literal language is, in fact, a remarkably complex and surprisingly delicate phenomenon. Particularly in the context of technological innovation, which by definition is always changing, it makes little or no sense to rely on the illusory certainty of literal language.

The basic point is quite familiar. As Chief Justice Marshall observed: "Such is the character of human language, that no word conveys to the mind, in all situations, one single definite idea."[30] This is particularly true in recondite endeavors such as science and technology for the reason that, with characteristic insight, Justice Cardozo identified: "Words after all are only symbols, and the significance of the symbols varies with the knowledge and experience of the minds receiving them."[31]

---

[30] *McCulloch v. Maryland*, 17 U.S. (4 Wheat.) 316, 414 (1819). *Cf. Monaco v. Mississippi*, 292 U.S. 313, 322 (1934) (Hughes, C.J.) ("Behind the words of the constitutional provisions are postulates which limit and control.").

[31] *Cooper v. Dasher*, 290 U.S. 106, 109 (1933).

Over the last thirty years, cognitive science has made striking advances in the study of the mind. It is not possible to catalogue them here.[32] But, consider just a few of the well-documented empirical findings that bear on the question of literal language. First, categories (including word-categories) display a variety of prototype effects—i.e., some category members are reliably rated better examples of the category than others; these prototypical cases are learned earlier, are easier to recall, and figure prominently in reasoning.[33] Second, categorization is an evolutionary adaptation that arose because it enabled more successful functioning. Concretely, this means that—as a pragmatic function—categorization is flexible and dynamic rather than definitional and static.[34] Third, and relatedly, meaning and categorization are socially motivated processes—i.e., context and purpose are built-in, constitutive elements of meaning. This is how we can accommodate the motivational and situational demands of real-life judgments.[35] Fourth, meaning and categorization are grounded in our pragmatic physical and social knowledge of the world. Meaning, therefore, can be highly domain specific; expertise consists in richer experiential knowledge (and, concommitantly, more extensive models of) specialized domains.

We can illustrate these points with some familiar legal examples. Consider, first, the voluntariness of a confession. A person, overburdened by guilt, walks into a police station and confesses to a crime. Rare as this case may be, it is easily and uncontroversially identifiable as a voluntary confession. The clarity, salience, and stability of this prototypical case may make it seem as if there is a readily identifiable literal meaning to the term "voluntary." But, as the Court knows only too well, the voluntariness of a confession is not so much a factual question as a conceptual one: It cannot be decided without focussing "upon the crucial element of police overreaching."[36]

This example is particularly instructive because it reveals the ways in which the psychologically simple may nevertheless be cognitively and conceptually complex. Note that in this case, the prototypical scenario is factually quite rare. Thus, its salience and stability is not a function of its frequency or familiarity (though it can be in the case of other categories). Here, the prototype effect is produced by our culturally-shared models of human behavior. In other words, the apparent simplicity and lucidity of the prototypical case is actually a product of rather complex processes of intelligibility that draw on tacit understandings about context, purpose, and motivation. This reflects the more fundamental point that language and meaning are not merely representational,

---

[32] *See* A CLEARING IN THE FOREST, *supra* note 22.

[33] Eleanor Rosch, *Principles of Categorization*, in COGNITION AND CATEGORIZATION 27 (Eleanor Rosch & Barbara B. Lloyd eds., 1978); LAKOFF, *supra* note 22, at 39-90.

[34] To the initiate, it might seem that evolutionary success requires mental representations that "correspond" with or "mirror" reality. But we would need significantly larger brains if that were the case. In fact, a computer cannot store—nor is it possible to specify—all of the necessary and sufficient conditions for the vast amount of common sense knowledge that the average human utilizes daily; this is one of the most difficult problems faced by those working in artificial intelligence. *See* HUBERT L. DREYFUS, WHAT COMPUTERS *STILL* CAN'T DO: A CRITIQUE OF ARTIFICIAL REASON 52-53 (2d ed. 1979); Dorothy Holland & Naomi Quinn, *Culture and Cognition*, in CULTURAL MODELS IN LANGUAGE AND THOUGHT 3, 19 (D. Holland & N. Quinn eds., 1987). The interactional and other non-correspondence ways in which the mind works yield quite significant cognitive efficiencies. *See* A CLEARING IN THE FOREST, *supra* note 22, at 35, 96-97 & 244-45.

[35] The implications of these finding for law are developed in A CLEARING IN THE FOREST, *supra* note 22, at 139-222 & 295-351.

[36] *Colorado v. Connelly*, 479 U.S. 157, 163 (1986); *see also Miller v. Fenton*, 474 U.S. 104, 112 (1985) (reaffirming that "the ultimate question whether, under the totality of the circumstances, the challenged confession was obtained in a manner compatible with the requirements of the Constitution is a matter for independent federal determination").

but entail complex knowledge of context, function, value, and purpose. "This is so," as Justice Frankfurter explained in an earlier confession case, "because the concepts by which language expresses an otherwise unrepresentable . . . reality are themselves generalizations importing preconceptions about the reality to be expressed."[37]

Note, too, that knowledge of the prototype provides very little guidance to the decisionmaker. Prototype effects, in other words, work better as touchstones for inclusion than as rules of exclusion. Standing alone, the fact that a car is certainly a "vehicle" covered by a rule prohibiting vehicles in the park tells us little about how we should handle a bicycle, a moped, or a child's electric automobile. To make that assessment, the decisionmaker must understand the social motivation for the rule and must apply it in light of those purposes. She may do so tacitly, as when one recognizes automatically that the rule does not apply to a child's tricycle, or explicitly, as the Court must do in the confession cases. But, in either event, there is no literal meaning that can be mechanically applied.

We can reinforce and extend the point with another example. Consider a rule prohibiting "live animals on the bus."[38] Does it bar a live goldfish in a sealed plastic bag? A specimen case of microscope slides containing live paramecia? Both goldfish and paramecia are literally animals.[39] But, then, so too are

---

[37] *Culombe v. Connecticut*, 367 U.S. 568, 604-05 (1961) (Opinion of Frankfurter, J.).

[38] The example comes from Frederick Schauer, *Formalism*, 97 YALE L.J. 509, 533 n.70 (1988). The complete argument appears in A CLEARING IN THE FOREST, *supra* note 22, at 101-03 (categories), 194-207 (rules), & 297-309 (perjury).

[39] THE RANDOM HOUSE DICTIONARY OF THE ENGLISH LANGUAGE 82 (2d ed. unabridged 1987) defines "animal" as an organism that "can move voluntarily, actively acquire food and digest it internally, and have sensory . .

humans: We are rational animals, to be sure; but, as mammals with sensory systems who respond to stimuli and move voluntarily, we too fit the literal definition. If, in the confession case, the literal meaning of the relevant terms provides too little information, here the literal scope of the category "animal" provides too much: It potentially covers the entire domain that runs from paramecia all the way to Homo sapiens. To decide how much of the literal reach of the category to include in the rule, one must interpolate one's social knowledge of the category "bus"—what it is for, who uses it, what types of problems or disturbances might concern its passengers, etc. This is how we know automatically that the rule prohibiting live animals on the bus cannot possibly apply to *us;* it is how we know *without having even to consider it* that humans are not animals for purposes of the rule. By the same token, it is this general background knowledge that makes the paramecium and goldfish cases seem silly to all but the most rigid bureaucratic mind-set.

To summarize, the experience of prototype effects creates the impression that there are clear, readily-available literal meanings for most language terms. But this experience of immediate comprehension in fact involves complex processes of intelligibility that draw on tacit knowledge of the relevant domain including context, purpose, social understandings and assumptions, models of behavior, etc. Moreover, the prototypical case is necessarily only a subset of the array of cases comprehended by the sense of any word-category; the immediately apparent literal meaning of a term can be vastly over- or under-inclusive. Thus, even everyday comprehension is a dynamic and flexible process that uses tacit knowledge for making contextual judgments about

---

. systems that allow them to respond rapidly to stimuli." It further notes that "some classification schemes include protozoa . . . that have motility and animallike nutritional modes."

what to include and what to exclude from a term's purview.

One might think that in science and technology, at least, things must be different. It may be conventional to think of science as a series of discoveries about the nature of such things that brings us closer and closer to an accurate representation of reality. But even Popper rejected that view.[40] Because science and technology are human endeavors, they are subject to the laws of human language and thought. Self-declaring literal meaning is no more available in science and technology than elsewhere; science and technology progress nevertheless because they are pragmatic functions that operate in the same flexible, dynamic ways as other human cognitive processes.

Consider, for example, Newton's Second Law of Motion: $f = ma$. Scientists can and do discuss it unproblematically. But, as Kuhn observes:

> It is not quite the case that logical and mathematical manipulation are applied directly to $f = ma$. That expression proves on examination to be a law-sketch or a law-schema. As the student or the practicing scientist moves from one problem situation to the next, the symbolic generalization to which such manipulations apply changes. For the case of free fall, $f = ma$ becomes $mg = m(d^2s/dt^2)$; for the simple pendulum it is transformed to $mg \sin\theta = -ml(d^2\theta/dt^2)$; for a pair of interacting harmonic oscillators it becomes two equations, the first of which may be written $m_1(d^2s_1/dt^2) + k_1s_1 = k_2(s_2 - s_1 + d)$; and for more complex situations, such as the gyroscope, it takes still other forms. . . . Yet, while learning to identify forces, masses, and accelerations in a variety of physical situations not previously encountered, the student has also learned to design the appropriate version of $f = ma$ through which to interrelate them, often a version for which he has encountered no literal equivalent before. . . .[41]

What is true of science is also true in other technological and engineering contexts. Consider an example integral to the issue at hand: the blueprint. "Blueprints are planning documents for buildings, machines, or other structures that translate purposes, and design solutions for reaching those purposes, into 'formal' documents."[42] One might think that a blueprint, of all things, must be a rigorously accurate representation of the structure to be built. But even in this most concrete of "real-world" domains, where one might most expect objective correspondence with a harshly determinate reality, formal meaning is a function of informal, practical knowledge—i.e., craft traditions and practices. The formal language (i.e., the conventions) of the blueprint in fact permits quite a lot of ambiguity: Much of what the blueprint "specifies" is actually left to the know-how of the relevant craft, and there are understood tolerances for differences in performance.

> Thus just as a cookbook recipe for a bread relies on one knowing what "smooth and elastic" bread dough feels like. . . , the blueprint relies on a plumber knowing how to fit a one per cent grade of a waste pipe into a frame of a wall as that frame has been actually built (up to 0.2 percent out of plumb). The semantics of the abstractions in the first instance are given by craft know-

---

[40] KARL R. POPPER, THE LOGIC OF SCIENTIFIC DISCOVERY 35-38 (1959).

[41] KUHN, *supra* note 21, at 188-89 (postscript to the second edition).

[42] ARTHUR L. STINCHCOMBE, WHEN FORMALITY WORKS: AUTHORITY AND ABSTRACTION IN LAW AND ORGANIZATION 56 (forthcoming Univ. of Chicago Press 2002).

> ledge, quite often craft knowledge that the architects or engineers themselves do not have. . . .
>
> Thus embedded in the abstractions are meanings derived from work systems, crafts or factories, outside the building as such.[43]

In much the same way, the "literal" terms used in the blueprint change with variances in materials. For example, the term "outside corner"— which designates the point from which one measures the location of a window opening—changed with the

> switch from masonry (especially brick) bearing walls to wood frame bearing walls with brick veneer. . . . [O]ne now specifies the dimensions for locating window openings from the outside corner of the wooden frame, rather than the outside corner of the house, which will not nowadays be there when the opening is built.[44]

Far from literal, the formal language of the blueprint presupposes or "embeds" practical knowledge that is flexible, functional, and context or convention-dependent: "[T]he drawings and documents are tied together by their embedding in a language of the purposes of building, much of it distinctive of the different trades and describing particular purposes best pursued with that trade's technologies."[45]

---

[43] *Id.* at 59-60.

[44] *Id.* at 61. *Cf. Towne v. Eisner*, 245 U.S. 418, 425 (1918) (Holmes, J.) ("A word is not a crystal, transparent and unchanged, it is the skin of a living thought and may vary greatly in color and content according to the circumstances and the time in which it is used.").

[45] STINCHCOMBE, *supra* note 42, at 67. At best, literal or "plain meaning is the extreme value (namely, zero) of a variable that describes the variance of meaning in a linguistic community, given a text." *Id.* at 55. In other words, literal or plain meaning is just the limiting value (rarely achievable) of a variable that describes the degree of ambiguity of a given term within a linguistic community. In the case of construction blueprints, Stinchcombe

Until the decision below, one could have said that patent law embodied just these insights about language and meaning. Thus, in *Machine Co. v. Murphy*, the Court said that, in determining infringement under the doctrine of equivalents, the decisionmaker should

> look at the machines or their several devices or elements in the light of what they do, or what office or function they perform, and how they perform it, and to find that one thing is substantially the same as another, if it performs substantially the same function in substantially the same way to obtain the same result. . . .[46]

So, too, in *Graver Tank*, the Court reconfirmed that the doctrine must be applied with an eye to purpose, context, and function: "Consideration must be given to the purpose for which an ingredient is used in a patent, the qualities it has when combined with the other ingredients, and the function which it is intended to perform."[47] This "triple identity" or "function-way-result" test —perhaps more suitable for analyzing mechanical devices as the Court noted in *Warner-Jenkinson*[48]—represents the accumulated wisdom of 150 years of judicial experience. That cognitive science should now corroborate what judges all along have known is hardly surprising; rather, it reflects yet another layer of sig-

---

puts that value at approximately 10%—so that "the estimate for the building made by the architect come[s] reasonably near the bids made by the contractors on the same set of documents." *Id.* at 71.

[46] *Machine Co. v. Murphy*, 97 U.S. 120, 125 (1878).

[47] *Graver Tank & Mfg. Co. v. Linde Air Products Co.*, 339 U.S. 605, 609 (1950). Though this Court had rejected so-called "functional" claims in *Halliburton Oil Well Cementing Co. v. Walker*, 329 U.S. 1 (1946), Congress amended the statute in 1952 to once again make them possible, 35 U.S.C. § 112 (2001), as this Court noted in *Warner-Jenkinson Co. v. Hilton Davis Chemical Co.*, 520 U.S. 17, 27-28 (1997).

[48] *Warner-Jenkinson*, 520 U.S. at 39-40.

nificance in Holmes celebrated insight that, "The life of the law has not been logic: it has been experience."[49]

It is not that there can never be a clear-cut, literal meaning. When the relevant category or concept is a formal one—such as the pH level specified in the patent at issue in *Warner-Jenkinson*[50]—it is possible to have the clarity and precision of meaning that the court below craved. But, this Court should not be misled by one example: There are many more categories like "voluntariness," "animal," "$f = ma$," and "outside corner" than like "pH level." In that much larger class of cases, the assumed certainty of literal meaning will, at best, prove chimerical; at worst, it will be distorting and lead to arbitrary results. Because technical language derives its meaning from the practices, conventions, functions, and purposes of scientific or craft specialities, a court cannot do justice to a patent claim with a literal reading that precludes appeal to the practical and functional considerations that form the very basis of meaning. Thus, in *Warner-Jenkinson*, this Court held that "a skilled practitioner's knowledge of the interchangeability between claimed and accused elements" is relevant to the question of equivalence, reasoning that:

> Much as the perspective of the hypothetical "reasonable person" gives content to concepts such as "negligent" behavior, the perspective of a skilled practitioner provides content to, and limits on, the concept of "equivalence."[51]

---

[49] OLIVER WENDELL HOLMES, JR., THE COMMON LAW 5 (Mark Howe ed. 1963) (1881). For discussion of some of the ways in which Holmes's insights about language and law anticipated findings made by cognitive science many decades later, see A CLEARING IN THE FOREST, *supra* note 22, at 36-42.

[50] *Warner-Jenkinson*, 520 U.S. at 21-24.

[51] *Id.* at 37. *Cf.* RICHARD A. POSNER, THE PROBLEMS OF JURISPRUDENCE 48 (1990) (noting that "[s]tandards that capture lay intuitions about right

Just the same can be said with respect to the literal meaning of a patent. Literalism of the sort adopted by the court below simply misapprehends how humans reason and understand.[52] Because it would deprive decisionmakers of the basis for ascertaining the scope and meaning of a patent, it is as likely to undermine certainty as advance it.

Moreover, these distorting effects will be most pronounced in cases of true innovation. As Judge Rader noted in his separate opinion below: "Without a doctrine of equivalents, any claim drafted in current technological terms could be easily circumvented after the advent of an advance in technology."[53] When a patent involves minor technological improvements to a pre-existing invention, it is at least plausible for a savvy inventor and a skilled patent lawyer to anticipate the range of possible applications that needs to be protected and draft a claim accordingly. In such cases, the nature of the product and its market are already established. But, when an invention changes fundamentally the nature of the product—as occurred, for example, with the invention of the transistor and the integrated circuit—or when it

---

behavior" such as the negligence standard "may produce greater legal certainty than a network of precise but technical, nonintuitive rules covering the same ground").

[52] *Compare* Thomas S. Kuhn, *Second Thoughts on Paradigms*, in THE STRUCTURE OF SCIENTIFIC THEORIES 459, 482 (Frederick Suppe ed., 1974) ("Shared examples can serve cognitive functions commonly attributed to shared rules."), *with* H. L. A. HART, THE CONCEPT OF LAW 124 (1961) ("[T]he authoritative general language in which a rule is expressed may guide only in an uncertain way much as an authoritative example does.").

[53] *Festo*, 234 F.3d at 619 (Rader, C. J., concurring in part and dissenting in part). Judge Rader gave the example of the vulnerability, after the development of transistor technology, of a pre-1948 patent using the terms "anode" and "cathode" from the earlier tube technology. "[W]ithout a doctrine of equivalents, infringers in 1949 would have unfettered license to appropriate all patented technology using the out-dated terms. . . ." *Id.*

creates an entirely new market, this simply cannot be done.

In fact, true innovators often do not know what they have really invented. Joseph Priestly was the first to isolate oxygen. But, it was Antoine Laurent Lavoisier who showed that Priestly had actually discovered oxygen, and not "dephlogisticated air" as Priestly claimed to his dying day.[54] Similarly, Max Planck employed the idea of quantized electrons to develop what we now call quantum theory, but he explicitly denied that the energy in atoms was quantized into discrete packets. It was Einstein who insisted that quantization was more than a mathematical formalism and who drew out its implications (leading to the photoelectric cell familiar in many electronic sensing devices).[55] Spencer Silver, a 3M research scientist, was working on a new water-soluble adhesive. The experiment failed; instead of forming a film, the adhesive formed particles. Seven years later, one of his colleagues used that adhesive to create the now-ubiquitous Post-it note—which can be reused because the adhesive is contained in tiny bubbles of urea-formaldehyde resin that break under pressure.[56]

Invention, in other words, is a *process*. Inventions don't just spring into being; they unfold.[57] The significance of a discovery or invention often depends on what others in the field have found or seen—each new patentable innovation altering the

---

[54] KUHN, *supra* note 21, at 54-56.

[55] THOMAS S. KUHN, BLACK BODY THEORY AND THE QUANTUM DISCONTINUITY, 1894-1912, 182-201 (1978).

[56] Joe Schwarcz, *Everyday Chemistry: What Makes a Situation Sticky*, The Washington Post, December 8, 1999, at H01; Amy Ellis Nutt, *Indispensable Post-it Notes Didn't Stick at First; 20 Years Later, Billions Have Been Sold, Posted*, The Times-Picayune, April 16, 2000, at F14.

[57] DONALD BRABEN, TO BE A SCIENTIST: THE SPIRIT OF ADVENTURE IN SCIENCE AND TECHNOLOGY 11-17 (1994); ROOT-BERNSTEIN, *supra* note 14, at 203; David N. Perkins & Robert J. Weber, *Conclusion: Effable Invention*, in WEBER & PERKINS, *supra* note 16, at 319.

possibilities inherent in all related innovations. Sometimes, significant inventions change the field in ways that remain beyond the inventor's own comprehension. The more innovative, fundamental, or revolutionary is an invention or discovery the greater the changes it will cause and the less it will be possible to foresee the range of its uses, applications, and adaptations.[58] A patent law sensitive to the need to encourage innovation would not qualify protection on an extra-human prescience able to reduce the unforeseen to literal terms. To do so would be to fail to protect the most important inventions and discoveries—potentially putting at risk the flow of new inventions that have contributed so much to America's preeminence in science and technology.[59]

In *Royal Typewriter*, Learned Hand faced the limitations of literal language pointblank: "It is true that a boundary cannot be drawn with precision; and the draftsman of claims is always in something of a dilemma—the dilemma which has led to the very 'doctrine of equivalents' itself. . . ."[60] For Hand, the antinomy between literal formalism and functional description was simply "inherent in the whole doctrine. It may be that it will disappear, but nothing so far satisfies us that as yet it has."[61] Fifty years later, cognitive science has made significant strides in delineating the quite remarkable, flexible, and dynamic (i.e., non-literal) pro-

---

[58] Moreover, it is not just inventors and their patent attorneys who must make such extra-human predictions, it is also the patent examiner. Yet, as the number of patent filings steadily increases, the number of scientists trained each year—and, therefore, the pool of qualified potential patent examiners—decreases. Donald Quigg, *Technology on the Move: The Role of Patents*, in WEBER & PERKINS, *supra* note 16, at 313.

[59] Quigg notes that an increasing number of U.S. patents are going to foreign corporations: In 1968, approximately 20% of patents filed in the United States were by citizens of other nations; by 1988, it was 48%; now it is over half. *Id.* at 312.

[60] *Royal Typewriter*, 168 F.2d at 693.

[61] *Id.* at 694.

cesses through which human brains successfully accommodate the diversity and complexity of everyday life. What lies at the heart of these mechanisms is the capacity to expand or adjust our concepts relative to need; we can do so because context, function, and purpose are built-in, constitutive dimensions of meaning and categorization. The court below would substitute the illusory precision of literal meaning for the functional, context-sensitive, purpose-oriented inquiry that has characterized the doctrine of equivalents for its more than 150 year history. That is bad law, bad science, and bad policy. The decision below should be overruled.

CONCLUSION

For the foregoing reasons, amici respectfully submit that the judgment of the Federal Circuit should be reversed.

Respectfully submitted,

STEVEN L. WINTER
Brooklyn Law School
250 Joralemon Street
Brooklyn, NY 11201
(718) 780-7550

Counsel for Amici

AUG 31 2001 (26)

Supreme Court, U.S.
FILED
AUG 31 2001
OFFICE OF THE CLERK

No. 00-1543

In The

Supreme Court of the United States

FESTO CORPORATION,

Petitioner,

v.

SHOKETSU KINZOKU KOGYO KABUSHIKI CO., LTD., a/k/a SMC CORPORATION and SMC PNEUMATICS, INC.,

Respondents.

On Writ Of Certiorari To The United States Court Of Appeal For The Federal Circuit

BRIEF OF AMICUS CURIAE CHIRON CORPORATION IN SUPPORT OF PETITIONER

CHIRON CORPORATION
ROBERT P. BLACKBURN
4560 Horton Street
Emeryville, California
94608
(510) 655-8730

DONALD S. CHISUM
Counsel of Record
RACHEL KREVANS
GEORGE C. YU
RACHEL P. WILLIAMS
MORRISON & FOERSTER LLP
755 Page Mill Road
Palo Alto, California
94304-1018
(650) 813-5600

Counsel for Amicus Curiae Chiron Corporation

August 31, 2001

COCKLE LAW BRIEF PRINTING CO., (800) 225-6964
OR CALL COLLECT (402) 342-2831

38 pp

TABLE OF CONTENTS

Page

STATEMENT OF INTEREST 1

SUMMARY OF ARGUMENT..... 2

ARGUMENT 4

I. THE BIOTECHNOLOGY INDUSTRY DEPENDS ON A STRONG DOCTRINE OF EQUIVALENTS 4

A. The Complete Bar Rule of *Festo* Represents a Drastic Change in Patent Law that Should Be Made, If at All, by Congress..... 4

B. The Public Interest in Biotechnology Innovation Would Be Impaired If the Doctrine Were Eliminated or Cut Back 9

C. *Festo* Drastically Limits the Scope of Protection for Biotechnology Patents..... 11

1. The Biotechnology Industry Has a Real Need for a Reasonable Doctrine of Equivalents..... 14

2. The Doctrine of Equivalents Is Necessary to Alleviate the Uncertainty Caused by the Requirements of Section 112 in Biotechnology Patent Applications 16

II. THE NEW RULES ANNOUNCED IN *FESTO* SHOULD NOT BE APPLIED RETROACTIVELY .. 18

A. Application of the *Chevron* Factors Demonstrates that *Festo* Should Only Be Applied Prospectively..... 19

TABLE OF CONTENTS – Continued

Page

1. The Complete Bar Represents a New Principle of Law 22

2. Retroactive Application of *Festo* Does Not Promote the Goals of Certainty and Promoting Innovation 23

3. *Festo* Retroactively Alters the Bargain Between the Patentee and the Government 24

B. Retroactive Application of *Festo* Deprives Patentees of Their Property Rights Without Due Process 27

CONCLUSION 29

TABLE OF AUTHORITIES

Page(s)

CASES

Amgen, Inc. v. Chugai Pharm. Co., 927 F.2d 1200 (Fed. Cir. 1991) 13, 14, 15, 16

Amgen, Inc. v. Hoechst Marion Roussel, 126 F.Supp. 2d 69 (D. Mass. 2001) 15

Athletic Alternatives, Inc. v. Prince Mfg., Inc., 73 F.3d 1573 (Fed. Cir. 1996) 24

Bonito Boats, Inc. v. Thunder Craft Boats, Inc., 489 U.S. 141 (1989) 27

Chevron Oil Co. v. Huson, 404 U.S. 97 (1971) 20, 21

Chevron U.S.A., Inc. v. Natural Resource Defense Council, Inc., 467 U.S. 837 (1984) 21, 22

Chiron Corp. v. Abbott Lab., Inc., 902 F.Supp. 1103 (N.D. Cal. 1995) 8

Diamond v. Chakrabarty, 447 U.S. 303 (1980) 11

Eibel Process Co. v. Minnesota & Ontario Paper Co., 261 U.S. 45 (1923) 7

Festo Corp. v. Shoketsu Kinzoku Kogyo Kabushiki Co., Ltd., 234 F.3d 558 (Fed. Cir. 2000) ..... *passim*

Genentech, Inc. v. Chiron Corp., 220 F.3d 1345 (Fed. Cir. 2000) 2

Graham v. John Deere Co., 383 U.S. 1 (1966) 27

Graver Tank & Mfg. Co. v. Linde Air Prods. Co., 339 U.S. 605 (1950) 5, 24, 25

Griffin v. Illinois, 351 U.S. 12 (1956) 26

TABLE OF AUTHORITIES – Continued

Page(s)

Harper v. Virginia Dept. of Taxation, 509 U.S. 86 (1993) 20

Hilton Davis Chem. Co. v. Warner-Jenkinson, Inc., 114 F.3d 1161 (Fed. Cir. 1997) 19

Hitzeman v. Rutter, 243 F.3d 1345 (Fed. Cir. 2001) 7

Hughes Aircraft Co. v. United States, 717 F.2d 1351 (Fed. Cir. 1983) 8, 22

Hughes v. Washington, 389 U.S. 290 (1967) 27

In re Angstadt, 537 F.2d 498 (C.C.P.A. 1976) 6, 9

In re Bell, 991 F.2d 781 (Fed. Cir. 1993) 2, 13

In re Berg, 140 F.3d 1428 (Fed. Cir. 1998) 26

In re Wands, 858 F.2d 731 (Fed. Cir. 1988) 8, 16, 17

Kewanee Oil Co. v. Bicron Corp., 416 U.S. 470 (1974) 9, 25, 29

Key Pharms. v. Hercon Lab. Corp., 161 F.3d 709 (Fed. Cir. 1998) 23

Markman v. Westview Instr., Inc., 517 U.S. 370 (1996) 5

Mathews v. Eldridge, 424 U.S. 319 (1976) 29

Mycogen Plant Sci., Inc. v. Monsanto Co., 243 F.3d 1316 (Fed. Cir. 2001) 12, 13, 17

Mycogen Plant Sci., Inc. v. Monsanto Corp., No. 00-1127, ___ F.3d ___, 2001 U.S. App. LEXIS 18331 (Fed. Cir. August 14, 2001) 17, 18

TABLE OF AUTHORITIES – Continued

Page(s)

Pioneer Magnetics, Inc. v, Micro Linear Corp., 238 F.3d 1341 (Fed. Cir. 2001) 19

Regents of the University of California v. Eli Lilly & Co., 119 F.3d 1559 (Fed. Cir. 1997) 13

Reynoldsville Casket Co. v. Hyde, 514 U.S. 749 (1995) 21

Ruckelshaus v. Monsanto Co., 467 U.S. 986 (1984) 28

Ryder v. United States, 515 U.S. 177 (1995) 20, 21

Stevens v. City of Cannon Beach, 510 U.S. 1207, 114 S.Ct. 1332 (1994) 28

TSC Indus., Inc. v. Northway, Inc., 426 U.S. 438 (1976) 7

TVA v. Hill, 437 U.S. 1538 (1978) 22

Transmatic, Inc. v. Gulton Indus., Inc., 53 F.3d 1270 (Fed. Cir. 1995) 6

Warner-Jenkinson Co., Inc. v. Hilton Davis Chem. Co., 520 U.S. 17 (1997) ..... *passim*

Winans v. Denmead, 56 U.S. (15 How.) 330 (1854) ..5, 24

CONSTITUTIONS, STATUTES, AND REGULATIONS

U.S. Const., Fifth Amendment 27, 29

35 U.S.C. § 102 7

35 U.S.C. § 103 7

35 U.S.C. § 112 ..... *passim*

TABLE OF AUTHORITIES – Continued

Page(s)

35 U.S.C. § 154 ..... 26, 27

37 C.F.R. §§ 1.821 *et seq.* 14

MISCELLANEOUS

141 Cong. Rec. S15221 (daily ed. Oct. 17, 1995) (statement of Sen. Hatch) 10

146 Cong. Rec. S144 (daily ed. Jan. 31, 2000) (statement of Sen. Mikulski) 10

146 Cong. Rec. S144 (daily ed. Jan. 31, 2000) (statement of Sen. Hatch) 10

147 Cong. Rec. E1002 (daily ed. June 5, 2001) (statement of Rep. Coble) 3

Arthur Andersen, *Patients or Patents? New Andersen Survey Reveals What Matters Most to the 21st Century Healthcare Community*, (April 24, 2001) <http://www.arthurandersen.com/website.nsf/content/MediaCenterNews-DeskPBHsurvey04242001!OpenDocument> 10

3 D. Chisum, Patents § 8.03[3][c] (2000) 7

Walter G. Park, *Measuring Global Patent Protection*, (1999) <http://www.fraserinstitute.ca/publications/forum/1999/03/patent___protection.html> 11

Walter G. Park and Juan Carlos Ginarte, *Determinants of Patent Rights: A Cross-National Study*, Research Policy, Oct. 1997, at 283-301 11

TABLE OF AUTHORITIES – Continued

Page(s)

Lawrence M. Rausch, *International Patenting Trends in Biotechnology Genetic Engineering*, National Science Foundation, Issue Brief NSF 99-351, (June 18, 1999) <http://www.nsf.gov/sbe/srs/issuebrf/sib99351.htm> 11

United States Department of Commerce, Patent & Trademark Office, *Manual of Patent Examining Procedure* §§ 2420 *et seq.* (rev. ed. Feb. 2000) 14

1

STATEMENT OF INTEREST

Founded in 1981 by scientists at the University of California, Chiron Corporation ("Chiron"), with more than three thousand employees, is one of the world's largest biotechnology companies.[1] Chiron applies biotechnology and other techniques of modern biology, including the rapidly expanding field of genomics, to develop products intended to lower the overall cost of healthcare and improve the quality of life by diagnosing, preventing, and treating disease. To carry out this mission, Chiron invests heavily in biological research: nearly $1.2 billion in the last four years. In return for its investment in research and development over the past twenty years, Chiron's inventions include drugs to treat cancer, multiple sclerosis, and cystic fibrosis; vaccines for hepatitis B, meningococcal C, and whooping cough; and blood tests used worldwide to screen donated blood for HIV and hepatitis C virus.

As do other biotechnology companies, Chiron depends on patent protection to achieve adequate returns on its research outlay to encourage stockholder investment. Chiron now owns over three thousand United States and foreign patents. It has taken a lead role in litigating issues related to biotechnology patent protection, including both infringement actions against companies that seek to use its patented technologies

---

[1] Written consent to the filing of this brief has been obtained from the parties and is lodged herewith. Counsel for a party did not author this brief in whole or in part. No person or entity other than the *amicus curiae*, its members, or its counsel made a monetary contribution to the preparation and submission of this brief.

without a license and appeals from Patent and Trademark Office ("PTO") decisions related to issues of patentability. *See, e.g., Genentech, Inc. v. Chiron Corp.*, 220 F.3d 1345 (Fed. Cir. 2000); *In re Bell*, 991 F.2d 781 (Fed. Cir. 1993). Chiron also appeared as *amicus curiae* in *Warner-Jenkinson Co., Inc. v. Hilton Davis Chem. Co.*, 520 U.S. 17 (1997). Thus, from its vantage point on the cutting edge of biotechnology, science, and law, Chiron has a unique perspective on the necessity of the doctrine of equivalents to ensure adequate protection for biotechnology inventions.

SUMMARY OF ARGUMENT

The biotechnology industry and the consumers of the industry's medical innovations benefit from the strong patent protection provided by a vigorous doctrine of equivalents. Patent protection for biotechnological inventions attracts investment capital to the industry, making possible the research necessary to discover and develop life-saving and life-improving medical treatments. These new drugs and treatments routinely require over ten years for research, development, and regulatory approval.

The doctrine of equivalents has been crucial to the adequate protection of biotechnology inventions. Without benefit of the doctrine of equivalents, biotechnology patents will suffer a significant diminution in value, the industry will find it more difficult to attract investment, and companies could not continue the research necessary to develop new treatments and save lives. Put another way, "[t]ry raising a half-billion dollars in capital to bring a cancer treatment to market without patent protection

for the underlying work." 147 Cong. Rec. E1002 (daily ed. June 5, 2001) (statement of Rep. Coble).

The "complete bar rule" announced in *Festo Corp. v. Shoketsu Kinzoku Kogyo Kabushiki Co., Ltd.*, 234 F.3d 558, 564 (Fed. Cir. 2000) (*en banc*), conflicts with the policy underlying patent law. Biotechnology inventions illustrate the need for the doctrine of equivalents to protect patentees' property rights against loss from alterations found to be equivalent after a patent is filed. First, many possible modifications to a biotechnology invention that could defeat literal infringement have no substantive impact on the invention. *Festo* provides a roadmap for a would-be copyist to avoid infringement by, for example, substituting a known, interchangeable amino acid at one position of a claimed protein. This sort of substitution would be obvious to one of ordinary skill in the art, and increases the incentive to imitate while decreasing the incentive to innovate. Second, there are after-developed improvements that build upon an invention, adding additional features or properties. The improvement itself may be patentable. That fact, however, should not limit the rights of the inventor whose basic invention is being exploited.

The Court should also consider whether, if a complete bar is necessary to prevent ambiguity in the application of the doctrine of equivalents, the holding of *Festo* should be applied purely prospectively – *i.e.*, to patents issuing from new applications filed after *Festo*. The long-established availability of the doctrine of equivalents has profoundly influenced how inventors draft and prosecute their patent applications, especially in the biotechnology field. Applicants typically submitted broad claims for an invention and narrowed the scope during examination.

Very few applications sailed through prosecution without any amendment.

Because the views of the PTO on the proper form of claims and the content of a patent application in the biotechnology arts has evolved over the years, Patent Examiners have required many amendments of original applications. These amendments had nothing to do with prior art and were typically required under 35 U.S.C. § 112, which provides rules limiting the scope of claims to subject matter that is adequately "disclosed" in the patent application. Prior to *Festo*, in accordance with the decisions of this Court and the Federal Circuit, applicants agreed to claim amendments without expecting to surrender all protection under the doctrine of equivalents. Under *Festo*, the owners of the vast majority of the estimated 1.2 million patents in force today will suffer a significant loss in the property right that existed upon grant of the patent, without due process. The retroactive application of *Festo* may be one of the most significant takings of existing property rights by the federal courts. Because *Festo* announces a new principle of law and reneges on the bargain between the parties to the patent system, it should not be given retroactive effect.

ARGUMENT

I. THE BIOTECHNOLOGY INDUSTRY DEPENDS ON A STRONG DOCTRINE OF EQUIVALENTS

A. The Complete Bar Rule of *Festo* Represents a Drastic Change in Patent Law that Should Be Made, If at All, by Congress

By holding "that when a claim amendment creates prosecution history estoppel, no range of equivalents is

available for the amended claim element," the *Festo* court has dramatically altered the landscape of patent law. *Festo*, 234 F.3d at 564. This decision "unfairly tips the balance away from patentees and toward competitors by constraining the legitimate rights of patentees to their inventions, even where competitors can reasonably determine the reasons for any amendments and the scope of any subject matter surrendered." *Id.* at 620-621 (Linn, J., dissenting in part). Such a shift in policy may particularly harm an industry like biotechnology where a claimed invention immediately suggests a large number of equivalents. *See id.* at 617 (Michel, J., dissenting in part).

The doctrine of equivalents has been an integral part of the United States patent system for nearly 150 years, since *Winans v. Denmead*, 56 U.S. (15 How.) 330 (1854). In subsequent years, this Court's decisions repeatedly affirmed the vitality of the doctrine and rejected efforts to limit its scope. *See, e.g., Graver Tank & Mfg. Co. v. Linde Air Prods. Co.*, 339 U.S. 605, 608-09 (1950) (collecting cases). This Court has reiterated the importance of the doctrine, noting that a patent claim "functions to forbid not only exact copies of an invention, but products that go to 'the heart of an invention but avoids the literal language of the claim by making a noncritical change.' " *Markman v. Westview Instr., Inc.*, 517 U.S. 370, 373-74 (1996) (quoting H. Schwartz, Patent Law and Practice 82 (2d ed. 1995)). Four years ago, in *Warner-Jenkinson Co., Inc. v. Hilton Davis Chem. Co.*, 520 U.S. 17, 33 (1997), this Court rejected the "complete bar" rule regarding prosecution history estoppel announced in *Festo*.

Potential infringers must consider the doctrine when evaluating whether to engage in conduct that may infringe a patent. The decision to practice a patented

invention near the borders of its claims is a calculated risk, requiring no more care than in analogous areas of the law. Application of the "insubstantial difference" test for equivalency is no less certain, for example, than application of a "reasonableness" test found in ordinary tort law. *See Warner-Jenkinson*, 520 U.S. at 40. Parties must make judgment calls, and patent attorneys, schooled in claim interpretation and familiar with the technology, are eminently able to make such determinations. That they may sometimes be wrong is no reason to eliminate or severely limit the doctrine. They are also sometimes wrong in opining on literal infringement. *See, e.g., Transmatic, Inc. v. Gulton Indus., Inc.*, 53 F.3d 1270, 1278-79 (Fed. Cir. 1995).

Festo will lead to a number of predictable consequences. First, patentees, unable to rely on the doctrine of equivalents, will disclose and claim a greater number of variants of their inventions to attempt to gain protection against insubstantial changes. Such additional disclosures could cause an explosion in the verbiage a patent contains. This change to current patent drafting practice could lead to an even greater reliance on the doctrine of equivalents because narrowly drafted claims allowed by the PTO without any amendment would still be entitled to a range of equivalents. *See Festo*, 234 F.3d at 592 (Plager, J., concurring).

The Court of Customs and Patent Appeals noted that "[t]o require such a complete disclosure would apparently necessitate a patent application or applications with 'thousands' of examples . . . along with information as to whether each exhibits [the property of the invention]." *In re Angstadt*, 537 F.2d 498, 502 (C.C.P.A. 1976). Because the

additional information disclosed would consist of insubstantial variations, there would be little corresponding public benefit from this added disclosure. Instead of reasonable notice of the scope of claims (including equivalents), competitors would be buried in "an avalanche of trivial information – a result that is hardly conducive to informed decisionmaking." *See TSC Indus., Inc. v. Northway, Inc.*, 426 U.S. 438, 448-49 (1976) (finding that excessive financial disclosure provides less useful information than concise summaries).

Festo also encourages patentees to blur the boundaries of their inventions with broadening terms and imprecise adjectives. *See, e.g., Eibel Process Co. v. Minnesota & Ontario Paper Co.*, 261 U.S. 45, 66 (1923) (using "substantial" and "high" to describe a patentable improvement to a papermaking machine); *see generally* 3 D. Chisum, Patents § 8.03[3][c] (2000) (discussing words of degree and relational terms). During examination, a patent examiner must evaluate whether each claim is definite, enabled by the specification, and supported by a written description. 35 U.S.C. § 112. In addition, the examiner must compare each claim to the prior art to determine whether the art anticipated the claim or rendered it obvious. 35 U.S.C. §§ 102, 103. The additional work created by vastly greater numbers of claims per patent and the use of fuzzy terms would increase the time from the filing of a patent application to issuance of a patent.[2]

---

[2] Biotechnology patents, which now may take eight or ten years to issue could well take fifteen years instead, leaving the patentee with only a few years of protection. *See, e.g., Hitzeman v. Rutter*, 243 F.3d 1345, 1348 (Fed. Cir. 2001) (Federal Circuit

If this Court affirms the complete bar rule, patents obtained pre-*Festo* in reliance on the doctrine of equivalents could become valueless. Very few patents are granted with claims as originally filed. *See Festo*, 234 F.3d at 638 (Newman, J., dissenting in part). Many patentees accepted claim language amendments suggested by the PTO to facilitate allowance of their patents without intending to surrender claim scope. *See id.* at 622 (Linn, J., dissenting in part). Often, applicants had to amend claims to overcome rejections under 35 U.S.C. § 112 because of the evolving views of the PTO on adequate disclosure of a biotechnology invention. *See, e.g., In re Wands*, 858 F.2d 731, 740 (Fed. Cir. 1988) (finding monoclonal antibody technology enabled). When deciding whether to acquiesce in a PTO request to amend under § 112, patent applicants reasonably relied upon existing precedent holding that assertion of infringement under the doctrine of equivalents was not barred by such amendments as opposed to amendments to overcome prior art.[3] If any

---

decision granting priority over nineteen years after filing of original application); *Chiron Corp. v. Abbott Lab., Inc.*, 902 F.Supp. 1103, 1108-1109 (N.D. Cal. 1995) (eight years from filing to issuance).

[3] *See, e.g., Hughes Aircraft Co. v. United States*, 717 F.2d 1351, 1362-63 (Fed. Cir. 1983), *overruled by Festo*, 234 F.3d 558. In *Hughes*, claims to a method of controlling a satellite in flight were limited to a ground-based computer and controller carrying out the operation because the examiner alleged the specification enabled no other method. Years later, advances in solid-state electronics enabling production of computers small enough to fly onboard the satellite eliminated the need for the ground-based computer and controller. The accused method was carried out entirely onboard the satellite. The Federal Circuit held that assertion of infringement under the doctrine of

change in the law is appropriate, it should be made by Congress, which can adopt appropriate grandfathering legislation. *See* Section II.B, *infra*.

Lastly, and contrary to the constitutional objective of encouraging public disclosure of useful inventions, the holding of *Festo* may cause companies to rely more heavily on trade-secret protection for their inventions. "The interest of the public is that the bargain of 17 years of exclusive use in return for disclosure be accepted." *Kewanee Oil Co. v. Bicron Corp.*, 416 U.S. 470, 489 (1974). Faced with uncertainty that their patents may be rendered valueless by only strict literal reading, inventors may choose to limit early disclosure of certain inventions, especially in unpredictable arts such as biotechnology. *See Angstadt*, 537 F.2d at 503. But for claims to products rather than to processes, because competitors generally can reverse engineer biotechnology products without great difficulty, trade secret protection is often impractical once a potential product reaches the clinical trial stage and can be obtained and analyzed by others. Without the exclusivity offered by reasonable patent or trade secret protection, the biotechnology industry has less of an incentive to innovate, and, consequently, the public interest suffers.

B. The Public Interest in Biotechnology Innovation Would Be Impaired If the Doctrine Were Eliminated or Cut Back

"It would be difficult to underestimate the effect that biotechnology will have on health care delivery and,

---

equivalents was not barred because the amendment was made for § 112 reasons rather than to avoid prior art.

more to the point, on the health care status of the American public and our neighbors throughout the world." 146 Cong. Rec. S144 (daily ed. Jan. 31, 2000) (statement of Sen. Hatch). "Approximately 1,300 biotech companies in this country employ more than 150,000 people. . . . The industry spent nearly $10 billion on research and development in 1998 while revenues totaled $18.4 billion." *Id.* (statement of Sen. Mikulski). "The biotechnology industry relies heavily on patent protection in recouping the costs of bringing new drugs to the market. Furthermore, adequate patent protection is vital in persuading investors to provide the necessary capital to the industry." 141 Cong. Rec. S15221 (daily ed. Oct. 17, 1995) (statement of Sen. Hatch).[4] Biotechnology products include insulin to treat diabetes, drugs to treat AIDS and cancer, human growth hormone to treat dwarfism, and diagnostic tests to ensure the safety of the world's blood supply against viruses such as those causing hepatitis and AIDS.

Much of the explosive growth in biotechnology has resulted from technological advances in the last twenty

---

[4] Arthur Andersen recently reported that, based on a survey of 272 senior industry executives in the pharmaceutical, biotechnology, and health care industries (conducted by Knowledge Systems & Research, Inc.), "the development and protection of intellectual property is seen [to be] the most critical area" that drives their organizations' business strategies. Ninety-four percent of the respondents indicated that protecting proprietary research was a critical challenge, and ninety percent identified patent infringement as a critical area. Arthur Andersen, *Patients or Patents? New Andersen Survey Reveals What Matters Most to the 21st Century Healthcare Community*, (April 24, 2001) <http://www.arthurandersen.com/website.nsf/content/MediaCenterNewsDeskPBHsurvey04242001!OpenDocument>.

years. Not coincidentally, this Court's decision in *Diamond v. Chakrabarty*, 447 U.S. 303, 309 (1980), that a human-made, genetically-engineered, living organism represented patentable subject matter, signaled the beginning of the biotechnology industry itself. The United States has since emerged as the world's leading producer of biotechnology inventions, being the priority country for 63% of the patent families filed worldwide in 1990-94. *See* Lawrence M. Rausch, *International Patenting Trends in Biotechnology Genetic Engineering*, National Science Foundation, Issue Brief NSF 99-351 (June 18, 1999) <http://www.nsf.gov/sbe/srs/issuebrf/sib99351.htm.>. Researchers also rated the United States as having strongest patent system in 1995 among 130 countries around the world. *See* Walter G. Park, *Measuring Global Patent Protection*, (1999) <http://www.fraserinstitute.ca/publications/forum/1999/03/patent___protection.html>; *see also* Walter G. Park and Juan Carlos Ginarte, *Determinants of Patent Rights: A Cross-National Study*, Research Policy, Oct. 1997, at 283-301 (describing methods for comparing strength of patent protection in various countries). *Festo* weakens that crucial patent protection, a result that threatens the leading position of the American biotechnology industry.

C. *Festo* Drastically Limits the Scope of Protection for Biotechnology Patents

To understand the special importance of the doctrine of equivalents to biotechnology patents, a modicum of background in biology is helpful. All living organisms contain genetic material, usually made of DNA (deoxyribonucleic acid). Smaller molecules, called nucleotides, are arranged in a DNA molecule like beads on a string.

Only four nucleotides, typically labeled A, T, C, and G, comprise DNA, but a single strand of DNA may have thousands or millions of nucleotides. "A particular DNA molecule can be graphically represented by listing the nucleotide sequences making up that DNA molecule." *Mycogen Plant Sci., Inc. v. Monsanto Co.*, 243 F.3d 1316, 1323 (Fed. Cir. 2001) (*"Mycogen I"*).[5]

DNA contains encoded information that living cells use to build proteins. Proteins are molecules that perform a wide variety of functions in living organisms, from digesting food, to forming muscles, to helping the immune system combat infections. Like DNA, proteins can be described as linear (chain-like) molecules. All protein chains are made from combinations of smaller molecules, called amino acids; there are twenty possible amino acids. The sequence of nucleotides in DNA is the "code" for the sequence of amino acids in a protein. Each group of three nucleotides in a DNA sequence "codes" for one amino acid. In this way, a long molecule of DNA directs the production of a long protein molecule. Living cells have a complex machinery that "reads" a molecule of DNA, taking the sequence information from the DNA molecule and building the corresponding protein. A "gene" is a sequence of DNA that codes for a particular protein.

The doctrine of equivalents is essential for biotechnology patents claiming particular genes or proteins. In biotechnology patent cases, the Federal Circuit has developed a rule that an inventor cannot claim a gene without disclosing its sequence or specific structural

[5] This decision provides useful background information on biotechnology. *See id.* at 1322-24.

information about the gene. *See Regents of the University of California v. Eli Lilly & Co.*, 119 F.3d 1559, 1566 (Fed. Cir. 1997); *Amgen, Inc. v. Chugai Pharm. Co.*, 927 F.2d 1200, 1206 (Fed. Cir. 1991). Thus, under the law that the PTO applies during biotechnology patent examinations, it is nearly impossible to write a valid claim for "a DNA sequence that codes for protein X" unless the specification to the patent discloses that the sequence AGGTTAAATCAC etc. that codes for protein X. Therein lies the rub. Because there are sixty-four combinations of three nucleotides (recall that three nucleotides code for one amino acid) and only twenty amino acids, it has been known that several different combinations of nucleotides code for the same amino acid. *See Mycogen*, 243 F.3d at 1323 n.1. For example, nucleotides AGG and CGA both code for the same amino acid. Thus, two seemingly very different strands of DNA can code the same amino acid sequence:

AGG·TTA·AAT·CAC·ACT·GAA	*Nucleotides*
Arg·Leu·Asn·His·Thr·Glu	*Amino Acids*
CGA·CTT·AAC·CAT·ACC·GAG	*Equivalent*

Without a doctrine of equivalents, a gene patent would be valueless unless it claimed every equivalent sequence of nucleotides. Competitors could avoid infringement simply by substituting nucleotides with others known to be interchangeable. A patentee would need to claim every variant to prevent such unscrupulous copying. Mathematics alone make describing every possible variant impractical. *See In re Bell*, 991 F.2d at 784 (noting that 10^{36} nucleotide sequences could code for a

protein called IGF). While no doubt a computer could be programmed to print out every analog, the resulting patent claims would be a stack of paper miles high, and would overwhelm the PTO, as well as those who track patents, with their sheer bulk.[6]

Protein patents present a similar problem. As the Federal Circuit noted in analyzing a patent claim to the protein erythropoietin, "over 3,600 different [protein] analogs can be made by substituting at only a single amino acid position, and over a million different analogs can be made by substituting three amino acids." *Amgen, Inc. v. Chugai Pharm. Co.*, 927 F.2d 1200, 1213 (Fed. Cir. 1991). A substitution of one amino acid (*e.g.*, leucine) with another amino acid with similar chemical characteristics (*e.g.*, valine) often results in an insubstantially different protein. Even some additions or deletions of amino acids from the sequence of the protein will yield a functionally equivalent protein. Many analogs are functionally indistinguishable, and no purpose would be served by requiring their disclosure.

1. The Biotechnology Industry Has a Real Need for a Reasonable Doctrine of Equivalents

One of the *Festo* majority wrote separately to express his opinion that the biotechnology industry's special need for the doctrine of equivalents was "largely theoretical."

---

[6] The difficulties of examining DNA and protein patents have forced the PTO to adopt special rules for the presentation of nucleotide or amino acid sequence disclosures. 37 C.F.R. §§ 1.821 *et seq.* (1999); U.S. Department of Commerce, Patent & Trademark Office, *Manual of Patent Examining Procedure* §§ 2420 *et seq.* (rev. ed. Feb. 2000).

Festo, 234 F.3d at 597 (Lourie, J., concurring). However, a recent decision demonstrates why the biotechnology industry needs a vital doctrine of equivalents.

Amgen obtained a series of patents relating to a recombinant DNA product similar to the natural protein erythropoietin (EPO) – a protein described as being made up of 166 amino acids. *See Amgen, Inc. v. Hoechst Marion Roussel*, 126 F.Supp. 2d 69, 132-133 (D. Mass. 2001) ("*Hoechst*"). A competitor engineered cells to produce a variant that was 165 amino acids in length, deliberately deleting the last amino acid. *See id.* at 133. *Amgen's* claim was not literally infringed. After applying the "function-way-result" test, however, the *Hoechst* court determined that the competitor's variant was equivalent to the claimed EPO. *Id.* at 134.

Hoechst demonstrates that skilled scientists can readily recognize and create proteins (and DNA molecules) of equivalent function by making insubstantial changes to a claimed sequence. Amgen's inventors disclosed how to make a protein useful for treating many disease conditions, and their disclosure taught competitors enough to create an equivalent protein. Without a doctrine of equivalents, the value of Amgen's patent would have been lost, even though the deletion of the single amino acid created a molecule which is, for all known relevant biological purposes, the "same" protein. The concern of the biotechnology industry over the loss of the doctrine of equivalents is very real indeed.[7]

---

[7] In 1999, Amgen had sales of $1.76 billion of its recombinant EPO product, Epogen®. *Id.* at 77.

2. The Doctrine of Equivalents Is Necessary to Alleviate the Uncertainty Caused by the Requirements of Section 112 in Biotechnology Patent Applications

Biotechnology also needs a doctrine of equivalents to allay unpredictability in the application of Section 112 of the Patent Code concerning the allowable scope of claims. For example, an inventor who isolates a particular protein and useful fragments of the protein may claim the protein and fragments. The inventor may attempt to claim all similar protein fragments generally by describing a function of that fragment.

Whether the PTO or courts will allow such a claim depends on an eight-factor test. *See In re Wands*, 858 F.2d at 737. The factors include:

> (1) the quantity of experimentation necessary [to make the claimed invention], (2) the amount of direction or guidance presented [in the specification], (3) the presence or absence of working examples, (4) the nature of the invention, (5) the state of the prior art, (6) the relative skill of those in the art, (7) the predictability or unpredictability of the art, and (8) the breadth of the claims.

Id. The complexity of the test emphasizes the difficulty an applicant faces in predicting whether the claims will be allowed based on the patent's specification. *See Amgen*, 927 F.2d at 1212-14. The problem was made more acute for pioneering companies such as Chiron, founded in 1981, which were filing patent applications many years before decisions such as *Wands* and *Amgen* retroactively determined what the contents of those applications should contain. As a result, the requirements of Section

112 alone can severely limit claims. Even a minor narrowing amendment, however, will result in a complete loss of the doctrine of equivalents for the amended claim element under *Festo*.

Without a doctrine of equivalents to temper this unpredictability, decisions in the PTO based on the *Wands* test could cut off legitimate rights to claim an invention and its substantial equivalents. For example, in *Mycogen Plant Sci., Inc. v. Monsanto Corp.*, No. 00-1127, ___ F.3d ___, 2001 U.S. App. LEXIS 18331 (Fed. Cir. August 14, 2001) (*"Mycogen II"*), the Federal Circuit considered whether a patentee was entitled to any range of equivalents for a claim to a particular DNA sequence. *See id.* at *1-*2. The claimed invention addressed the problem of engineering plants to produce a bacterial protein toxin with insecticidal properties ("Bt") at a high enough level to kill insects. *See Mycogen I*, 243 F.3d at 1322. The inventors solved this problem by modifying the bacterial DNA sequence that codes for Bt to a DNA sequence more favored by plants without changing the resulting amino acids. *See id.* at 1324.

The Patent Office, however, rejected claims to a DNA sequence coding for a protein "functionally equivalent" to native Bt that would be highly expressed in plants as not enabled and indefinite. *See* 35 U.S.C. § 112, ¶¶ 1, 2. Mycogen eventually obtained claims directed to a particular disclosed sequence of 1793 or 1833 nucleotides in length. *See Mycogen II*, 2001 U.S. App. LEXIS 18331 at *3-*11. Applying *Festo*, the Federal Circuit limited Mycogen to the literal scope of the claims. *Id.* at *14. Thus, a competitor could completely avoid liability by changing only one nucleotide from the 1833-nucleotide

sequence disclosed by Mycogen – a DNA sequence that would still code for a functional Bt protein.

As *Mycogen II* demonstrates, an inventor's only protection against these losses would be to make and test thousands of potentially useful variants, to describe each in the specification, and to claim each functionally equivalent variant. The extra work involved would slow down patent applications, divert the industry's resources from developing the best commercial embodiments of its inventions, and create a disincentive to disclosing an invention. Alternatively, if the patentee does not describe and enable each potentially useful or functionally equivalent variant in the initial specification, *Festo* would eliminate any range of equivalents – even those equivalents that might be immediately apparent. *Festo* thus offers a Hobson's choice: describe and claim each DNA or protein sequence variant or allow a competitor to practice an equivalent sequence with impunity if a claim to a generic sequence is subject to prosecution history estoppel.

For the reasons explained above, Chiron agrees with the Petitioner that the Federal Circuit's new complete bar rule runs contrary to not only Supreme Court precedent, but also the realities of established patent prosecution practice, and will unfairly impact the biotechnology industry.

II. THE NEW RULES ANNOUNCED IN *FESTO* SHOULD NOT BE APPLIED RETROACTIVELY

Festo overturns the settled expectations of patent applicants based on precedent regarding the doctrine of equivalents. The *Festo* majority announced three new rules of law: (1) that a patentee who amends a claim for

any reason relating to a statutory patentability requirement is subject to prosecution history estoppel, *Festo*, 234 F.3d at 566; (2) that voluntary amendments will create estoppel, *id.* at 568; and (3) that prosecution history estoppel creates a complete bar to application of the doctrine of equivalents, *id.* at 578. These rules "unfairly discount the expectations of a patentee who had no notice at the time of patent prosecution that such [rules] would apply." *Warner-Jenkinson*, 520 U.S. at 41 (Ginsburg, J., concurring).[8] Because these new rules rescind the valuable property interests of patentees who prosecuted patents in justifiable reliance on obtaining a reasonable scope of equivalents, the holding of *Festo* should only be applied prospectively – to patents issuing from new applications filed after *Festo*.

A. Application of the *Chevron* Factors Demonstrates that *Festo* Should Only Be Applied Prospectively

If *Festo* is upheld and applied retroactively, patentees who obtained their patents prior to the Federal Circuit's decision will suffer a devastating loss of property rights with the elimination of the doctrine of equivalents for a

---

[8] On remand, the Federal Circuit acknowledged Justice Ginsburg's concerns and concluded that, when the record was silent as to the reason for an amendment, the patentee should have an "opportunity to establish the reason, if any, for a claim change." *Hilton Davis Chem. Co. v. Warner-Jenkinson, Inc.*, 114 F.3d 1161, 1163 (Fed. Cir. 1997) (*per curiam*). As explained by Judge Newman, *Festo* has made this "rebuttable presumption" irrebuttable. *See Festo*, 234 F.3d at 632-33; *see also Pioneer Magnetics, Inc. v. Micro Linear Corp.*, 238 F.3d 1341, 1345 (Fed. Cir. 2001) (finding that *Festo* barred consideration of a declaration explaining that an amendment was inadvertent).

large class of claims and the delineation of a foolproof method for competitors on how to avoid infringement of such a claim. Accordingly, if the Court accepts the reasoning of *Festo*, significant policy considerations militate against retroactively applying it to the detriment of patentees' investment-backed expectations.

In *Chevron Oil Co. v. Huson*, 404 U.S. 97, 106-107 (1971), the Court identified three factors to consider in determining whether a judicial decision would have a purely prospective effect: (1) whether the decision to be applied non-retroactively establishes a new principle of law, (2) whether retroactive application of the decision serves the purpose and effect of the decision, and (3) whether substantially inequitable results would occur if the decision is applied retroactively. *Id.*

Since *Chevron*, the Court has curtailed the prospective application doctrine. *See, e.g., Harper v. Virginia Dept. of Taxation*, 509 U.S. 86, 97 (1993) (establishing default rule of retroactive application of a new rule of constitutional law where the Court is applying the rule to the parties before it).[9] In so doing, however, the Court has indicated that in some instances, the prospectivity doctrine articulated in *Chevron* remains viable. *See, e.g., Ryder v. United States*, 515 U.S. 177, 185 (1995). In *Ryder*, for instance, the

[9] *Harper* only analyzed retroactivity in the context of the application of a new rule of federal law to third parties when it was applying the rule to the parties before it. *Id.* Accordingly, *Harper* is inapplicable in this case, where the issue is whether the complete bar rule of *Festo* should have a purely prospective effect. As Justice O'Connor has observed, "the question of pure prospectivity [was] not implicated by [*Harper*]." *Id.* at 116 (O'Connor, J., dissenting).

Court applied its decision retroactively but based its conclusion on the fact that the case, which would have affected no more than ten pending cases, did not involve the "grave disruption or inequity involved in awarding retrospective relief . . . that would bring the [*Chevron*] doctrine into play." *Id.*

The Court similarly acknowledged the viability of prospective decision-making in *Reynoldsville Casket Co. v. Hyde*, 514 U.S. 749, 759 (1995). While concluding that a claim of detrimental reliance on preexisting law was insufficient, without more, to justify prospective application of a judicial decision, the Court noted that prospective decision-making could be appropriate where a party demonstrated "*both* reliance interests and other significant policy justifications," conditions that were absent in *Reynoldsville*. *Id.; see also id.* at 761 (Kennedy, J., concurring) (noting that the majority did nothing to erode the Court's "authority to decide that in some exceptional cases, courts may shape relief in light of disruption of important reliance interests or the unfairness caused by unexpected judicial decisions.").

As noted in more detail below, *Festo* eliminates the doctrine of equivalents for a large proportion of the approximately 1.2 million patents in force today, upending the bargained-for property rights of these patent holders without legislative fact-finding, debate, or mandate. This constitutes precisely the kind of exceptional case involving significant policy justifications that warrants application of the *Chevron* prospectivity doctrine, for the complicated policy considerations implicated in diminishing the property rights of hundreds of thousands of patentees are better suited to the legislature than the judiciary. *See, e.g., Chevron U.S.A., Inc. v. Natural Resource*

Defense Council, Inc., 467 U.S. 837, 866 (1984) (noting that "[t]he responsibilities for assessing the wisdom of . . . policy choices and resolving the struggle between competing views of the public interest are not judicial ones" but are properly left to the legislative and executive branches); *accord TVA v. Hill*, 437 U.S. 153, 194 (1978).

1. The Complete Bar and the Application of Estoppel to Section 112 Amendments Represent New Principles of Law

The first *Chevron* factor, whether *Festo* applies a new rule of law, clearly favors purely prospective application. Having found that the Supreme Court "has not fully addressed the [scope] of equivalents that is available once prosecution history estoppel applies," the *Festo* majority concluded that it "must independently decide the issue." *Festo*, 234 F.3d at 571. After analyzing a long line of Federal Circuit decisions applying a "flexible bar" approach – that the range of equivalents is limited but not eliminated by prosecution history estoppel – the *en banc* majority overruled the flexible bar approach. *Id.* at 574. Likewise, the *Festo* court also set forth a new rule that amendments to overcome rejections under Section 112 also give rise to prosecution history estoppel. *See id.* at 566-67; *but see Hughes Aircraft*, 717 F.2d at 1362-63 (stating that the Supreme Court had rejected the "wooden application" of prosecution history estoppel to all claim amendments). By overruling a long line of decisions upon which patentees relied, *Festo* completely changed the legal landscape for patentees and their competitors. *See id.* at 612-615 (Michel, J., dissenting in part) (collecting more than fifty Federal Circuit cases applying the flexible bar approach).

2. Retroactive Application of *Festo* Does Not Promote the Goals of Certainty and Promoting Innovation

If certainty in the scope of patent claims is the goal of the complete bar rule, that goal is not advanced by applying the rule retroactively to patent applications filed before *Festo*. The premise underlying the new rule is that literal claim scope is readily ascertainable while the scope of the doctrine of equivalents is not. This is demonstrably wrong. The inherent limits in the ability of language to describe inventions create an inevitable amount of uncertainty at the borders of patent claims, whether the infringement asserted is literal or equivalent.

For example, in *Key Pharms. v. Hercon Lab. Corp.*, 161 F.3d 709, 716-17 (Fed. Cir. 1998), the Federal Circuit approved the use of extrinsic evidence to construe the phrase, "a pharmaceutically effective amount." The intrinsic record (the patent and prosecution history) contained no evidence on the point. *Id.* at 718. It can be no less certain to rely entirely on *extrinsic* evidence to determine the literal scope of a patent than to ascertain a scope of equivalents based on the *intrinsic* record.

Applying *Festo* retroactively also does not increase the certainty as to the scope of claims that have issued after argument by the applicant. "Arguments made voluntarily during prosecution may give rise to prosecution history estoppel if they evidence a surrender of subject matter." *Festo*, 234 F.3d at 568. Accused infringers will now assert that arguments made during prosecution surrender subject matter, while patentees will argue the opposite. Courts will still have to make the difficult ultimate determination whether an argument made during

prosecution surrenders claim scope. *See Athletic Alternatives, Inc. v. Prince Mfg., Inc.*, 73 F.3d 1573, 1582 (Fed. Cir. 1996) (noting that equivocal nature of argument during prosecution made it difficult to determine whether applicant surrendered subject matter).

Nor will any increased "certainty" in the scope of already-issued patents foster the purpose of promoting innovation. *See Festo*, 234 F.3d at 577. The "new rule hands the unscrupulous copyist a free ride on potentially valuable patented technology, as long as the copyist merely follows the prosecution history roadmap and makes a change, no matter how trivial or insubstantial, to an element otherwise covered by such a narrowed claim limitation." *Id.* at 627 (Linn, J., dissenting in part). Any rule that favors a copyist lessens the incentive to undertake the risks involved in invention. *See Graver Tank*, 339 U.S. at 607 (noting that limiting scope of claims to their literal language "would foster concealment rather than disclosure of inventions"); *see also Festo*, 234 F.3d at 639 (Newman, J., dissenting in part). Experience since *Winans* and *Graver Tank* demonstrates that a healthy range of equivalents promotes, rather than hinders, innovation.

3. *Festo* Retroactively Alters the Bargain Between the Patentee and the Government

Reliance on the flexible bar rule and the exemption from estoppel afforded § 112 amendments now leaves many patentees with worthless patents if courts retroactively apply the complete bar of *Festo*. The *Warner-Jenkinson* Court acknowledged that the PTO also may have relied on a flexible rule of estoppel when deciding whether to request an amendment to a claim. *See Warner-Jenkinson*, 520 U.S. at 32 n.6. If a complete bar applies, the

typical patent prosecution practice now leaves a patentee with claims that have no range of equivalents because the practice has been to claim broadly in the initial application and then arrive at an acceptable set of claims through negotiation with the examiner. *See Festo*, 234 F.3d at 592 (Plager, J., concurring). The complete bar rule thus reverses the rules of the game for most existing patents.

The patent process is a bargain between the inventor and the Government. The inventor agrees to disclose an invention to the public in exchange for the Government's agreement to grant a patent on the invention for a term of years. *See Kewanee Oil*, 416 U.S. at 481 (1974). *Festo* retroactively takes away from patentees the consideration they received from the Government in consenting to the disclosure of the invention. Thus, *Festo* destroys the benefit to the patentee in disclosing the invention and instead benefits copyists who add nothing of value to the technology.

The injustice is clearer still in a rapidly-advancing industry like biotechnology when considered in the context of the frequent § 112 amendments applicants have had to make over the years. A consistent justification for the doctrine of equivalents is to accommodate "after-arising technology." *See Warner-Jenkinson*, 520 U.S. at 37. "Because after-arising technology was not in existence during the patent application process, the applicant could not have known of it, let alone surrendered it." *Festo*, 234 F.3d at 620 (Rader, J., dissenting in part). Restricting patentees to the literal language of the patent claim and allowing competitors to use after-developed equivalents with impunity renders a large number of current biotechnology patents "hollow and useless." *See Graver Tank*, 339 U.S. at 607.

The only way for an applicant to avoid estoppel under *Festo* is to show from the intrinsic record that an amendment was not made for reasons of patentability. *Festo*, 234 F.3d at 586. However, "a patentee would have had little incentive to insist that the reasons for all modifications be memorialized in the file wrapper as they were made." *Warner-Jenkinson*, 520 U.S. at 41 (Ginsburg, J., concurring). And patentees have no way now to go back in time and supplement the record to comply with the new rule. Thus, *Festo* turns the "rebuttable presumption" of *Warner-Jenkinson* into an absolute presumption. *See Festo*, 234 F.3d at 632 (Newman, J., dissenting in part).

During the prosecution process, applicants were entitled to rely on the existing law regarding the doctrine of equivalents in deciding whether to accept the bargain offered by the Government. As stated by Justice Frankfurter, "We should not indulge in the fiction that the law now announced has always been the law and, therefore, that those who did not avail themselves of it waived their rights." *Griffin v. Illinois*, 351 U.S. 12, 26 (1956) (Frankfurter, J., concurring). This is not a case where a court interpreted a statute for the first time. Rather, prosecution history estoppel is a long-established, judicially-created doctrine that has been changed, more akin to Congress amending a law. When Congress does amend a law affecting property rights, it takes into account the preexisting rights and the need to grandfather such rights.[10]

---

[10] *See, e.g., In re Berg*, 140 F.3d 1428, 1435 n.9 (Fed. Cir. 1998) (finding that patents originally filed before June 8, 1995 were entitled to the *longer* of seventeen years from the date of issue or twenty years from the date of filing pursuant to amendment of 35 U.S.C. § 154 enacted by Pub. L. 103-465 § 532(a)(1) (1994)).

By imposing *Festo* retroactively this Court would punish patentees for behaving rationally under existing law.

B. Retroactive Application of *Festo* Deprives Patentees of Their Property Rights Without Due Process

In giving its new rules retroactive effect, the Federal Circuit has caused a significant diminution in value in a large percentage of the patents in force today. An inventor has a natural right to his or her discoveries. *See Graham v. John Deere Co.*, 383 U.S. 1, 6 (1966). "[The inventor] may keep his invention secret and reap its fruits indefinitely." *Bonito Boats, Inc. v. Thunder Craft Boats, Inc.*, 489 U.S. 141, 151 (1989). Or the inventor can disclose the invention and enjoy a time-limited period of exclusivity from the Government, including, exclusion of those who practice an insubstantial change to the invention. *Festo* eliminates a substantial portion of that exclusivity and destroys the value any existing patents to which the doctrine applies.

A patent provides a right to exclude others from practicing the claimed invention for a limited period of time in exchange for the inventor's contributing her ideas to the public. *See* 35 U.S.C. § 154. If Congress took back part of the compensation the inventor received in the exchange by shortening the patent term retroactively, then the patentee would likely be able to seek just compensation under the Takings Clause of the Fifth Amendment. The *Festo* decision similarly takes a portion of the patentee's property by restricting the right to exclude. Retroactive application of *Festo* represents an uncompensated judicial taking. *See Hughes v. Washington*, 389 U.S.

290, 298 (1967) (Powell, J., concurring) (reasoning that the Takings Clause applies to courts as well as legislatures).

Expressed another way, *Festo* represents the taking of a valuable trade secret by inducing its disclosure in exchange for certain consideration, and then later taking back a portion of that consideration. In *Ruckelshaus v. Monsanto Co.*, 467 U.S. 986 (1984), Monsanto argued that forced disclosure of its trade secrets pursuant to administrative regulations would constitute a taking requiring just compensation. In response, this Court held that a trade secret was a property interest protected by the Takings Clause. *Id.* at 1003-1004. Because the Court found that the economic value to Monsanto was its competitive advantage by virtue of exclusive access to its trade secrets, it held that the EPA's use or disclosure of Monsanto's trade secrets was a taking for public use. *Id.* at 1016.

In the patent context, an inventor predicates the disclosure of an invention, which until such disclosure is held as a trade secret, on the grant of exclusivity for the claimed invention and a reasonable scope of equivalents. Only when the inventor agrees to a set of claims does she necessarily consent to the disclosure of the invention and the end of her natural property right in the trade secret. "A State cannot be permitted to defeat the constitutional prohibitions against taking property without due process of law by the simple device of asserting retroactively that the property it has taken never existed at all." *Stevens v. City of Cannon Beach*, 510 U.S. 1207, 114 S.Ct. 1332, 1334 (1994) (Scalia, J., dissenting as to denial of writ of *certiorari*). By announcing the complete bar rule, the Federal Circuit has asserted that the patentee "surrendered" a

property right that the court later decided the patentee was not entitled.

Patentees now subject to the complete bar rule have not had an opportunity to be heard "at a meaningful time and in a meaningful manner" as required by the Due Process Clause of the Fifth Amendment. *Mathews v. Eldridge*, 424 U.S. 319, 333 (1976). Once the bargain with the Government is complete and the patent issues, an inventor no longer has the option of retreating from the bargain and treating an invention disclosed in a patent as a trade secret. *See Kewanee Oil*, 416 U.S. at 490 (inventor could choose to treat invention as trade secret). Because the rules have been changed for owners of existing patents without an opportunity to be heard, the Court should consider whether the retroactive application of *Festo* conflicts with the Due Process Clause.

CONCLUSION

Patent protection and the doctrine of equivalents have played a particularly important role in promoting the advancement of the biotechnology industry. *Festo* substantially changes the rules of the game for already issued patents and decreases the incentive to apply for

patents in the future. For the foregoing reasons, the decision below should be reversed or should be limited to purely prospective application.

Respectfully submitted,

DONALD S. CHISUM
Counsel of Record
RACHEL KREVANS
GEORGE C. YU
RACHEL P. WILLIAMS
MORRISON & FOERSTER LLP
755 Page Mill Road
Palo Alto, California 94304
(650) 813-5600

CHIRON CORPORATION
ROBERT P. BLACKBURN
4560 Horton Street
Emeryville, California 94608
(510) 655-8730
Counsel for Amicus Curiae
Chiron Corporation

AUG 31 2001

27

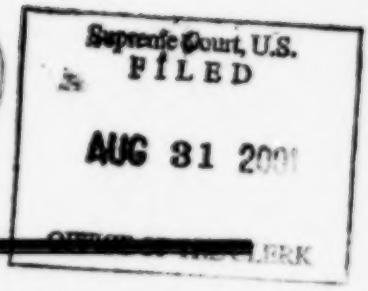

No. 00-1543

IN THE

SUPREME COURT OF THE UNITED STATES

FESTO CORPORATION,
Petitioner,
v.
SHOKETSU KINZOKU KOGYO KABUSHIKI CO., LTD., A/K/A SMC CORPORATION AND SMC PNEUMATICS, INC.,
Respondents.

On Writ of Certiorari to the United States Court of Appeals for the Federal Circuit

---

BRIEF OF *AMICUS CURIAE* ASTA MEDICA AKTIENGESELLSCHAFT IN SUPPORT OF PETITIONER

Steven B. Kelber
Piper Marbury
Rudnick & Wolfe, LLP
1200 Nineteenth St., N.W.
Washington, D.C. 20036
(202) 861-3900

Counsel of Record

Dr. Jobst Wibbelmann
Wuesthoff Germany
Schweigerstr. 2
D-81541 München
++49-(0)89-6218000

Of Counsel

26 pp

TABLE OF CONTENTS

Page

TABLE OF AUTHORITIES ii

INTEREST OF *AMICUS CURIAE* ASTA MEDICA AKTIENGESELLSCHAFT 1

CONSENT TO FILING OF *AMICUS CURIAE* BRIEF 2

SUMMARY OF THE ARGUMENT 2

ARGUMENT 3

I. The Primary Function of a Patent Is to Promote the Progress of Science and Useful Arts 3

II. *Festo* Promotes Increased Uncertainty By Hollowing Certain Existing Patents 5

III. *Festo* Limits the Scope of Patents in the United States Inconsistently With The Scope of Protection Afforded to Patents In Europe 13

CONCLUSION 21

TABLE OF AUTHORITIES

Page

CASES

BGH Case No. 1a ZR 10/63
on June 30, 1964 "Scanning needle"
(GRUR 1964, 669) 18, 20

BGH Case No. X ZR 22/97
on February 17, 1999 "Contact spring block"
(GRUR 1999, 914) 18

BGH Case No. X ZR 28/85
on April 29, 1986 "Moulded curbstone"
(GRUR 1986, 803) 17, 18

BGH Case No. X ZR 33/88
on October 3, 1989 "Handle cord for
battery case" (GRUR 1989, 903).....18

BGH Case No. X ZR 46/76
on June 15, 1978 "Wind screen"
(GRUR 1978, 699) 18

BGH Case No. X ZR 5/87
on June 14, 1988 "Ion analysis"
(GRUR 1988, 896) 17

BGH Case No. X ZR 6/91
on April 20, 1993 "Moistening device"
[literal translation] (GRUR 1993, 886).....18

BGH Case No. X ZR 63/87
on November 29, 1988 "Heavy metal
oxidation catalyst" (GRUR 1989, 205) 17

BGH Case No. X ZR 74/94
on February 4, 1997 "Cable duct"
(GRUR 1997, 455) 19

Graver Tank and Mfg. Co. v. Linde Air Products Co., 339 U.S. 605 (1950).....5, 7

Hughes Aircraft Co. v. United States, 140 F.3d 1470 (Fed. Cir. 1998) 8

Southwall Tech., Inc. v. Cardinal IG Co., 54 F.3d 1570 (Fed. Cir. 1995) 6

Warner-Jenkinson Co. v. Hilton Davis Chemical Co., 520 U.S. 17 (1997).....4, 7, 8, 19

STATUTES

Section 112, ¶ 2 of Title 35 of the United States Code 2

OTHER AUTHORITIES

Benkard/Ullman, PatG, [Patent Law], 9th edition, marginal number 84 in § 14.....19

Benkard/Ullmann, loc. cit., marginal number 82. 20

Draft Regulations and Practice Guidelines Under the Draft Substantive Patent Law Treaty, SCP/5/3, April 4, 2001.....15

Draft Substantive Patent Law Treaty, SCP/5/2, April 4, 2001 13

European Patent Convention ("EPC") 2000, art. 69, ¶ 1 15

Lower Courts' Festo Interpretations Are Increasing Uncertainty, Attorneys Told, 18 No. 16 Andrews Computer & Online Indus. Litig. Rep. 7 (2001) 6

Schramm, Der Patentverletzungsproze ß [Patent infringement proceedings], 4th ed., 1999.....20

The Act Revising the Convention on the Grant of European Patents Art. 2(1) (Munich, Nov. 29, 2000) 16

United States Patent and Trademark Office, Manual Of Patent Examining Procedure § 706.03(d) (7th ed., 1st Rev.) 2

WIPO statement of objectives at the website: <http://www.wipo.int/about-wipo/en/index.html?.....13

RULES

Supreme Court Rule 37.2(a)..... 2

CONSTITUTIONAL PROVISIONS

U.S. Const., art. 1, § 8 .....2, 4

BRIEF OF *AMICUS CURIAE* ASTA MEDICA AKTIENGESELLSCHAFT IN SUPPORT OF PETITIONER

INTEREST OF *AMICUS CURIAE*[1] ASTA MEDICA AKTIENGESELLSCHAFT

ASTA Medica Aktiengesellschaft ("ASTA Medica") is a leading international pharmaceutical corporation which owns over one hundred United States Patents. ASTA Medica supports the appeal of the Festo Corporation because it believes that the decision of the Court of Appeals in *Festo Corp. v. Shoketsu Kinzoku Kogyo Kabushiki Co.*, will significantly undermine its ability to obtain full and adequate patent protection under the laws of the United States. *Festo Corp. v. Shoketsu Kinzoku Kogyo Kabushiki Co.*, 234 F.3d 558 (Fed. Cir. 2000) ("*Festo*"). ASTA Medica routinely seeks and obtains the protection of United States patents for its pharmaceutical products, and almost always bases its United States applications on foreign filings. Frequently, during the course of prosecution in the United States, ASTA Medica is required to amend its application to alter the syntax or structure of its claims, in order to comport with United States practice and procedures. *See, e.g.*, United States Patent and

---

[1] This brief was not authored, in whole, or in part, by counsel for a party. No person or entity other than the *amicus curiae* made a monetary contribution to the preparation and submission of this brief.

Trademark Office, Manual Of Patent Examining Procedure § 706.03(d) (7th ed., 1st Rev.). Although those amendments might be considered related to patentability pursuant to Section 112, ¶ 2 of Title 35 of the United States Code, ASTA Medica did not intend to cede any claim scope by such amendment. Nevertheless, under *Festo*, the scope of protection afforded to claims so amended might be severely restricted, and the value of existing patents whose claims have been restricted in this fashion may be considerably diminished. Inasmuch as the decision of the Court of Appeals in *Festo* does not comport with previous United States law, or well-settled international precedent, it is respectfully submitted that *Festo* enhances uncertainty in the law, and should be reversed.

CONSENT TO FILING OF *AMICUS CURIAE* BRIEF

In accordance with Supreme Court Rule 37.2(a), ASTA Medica Aktiengesellschaft has obtained written consent to the filing of this *amicus curiae* brief from the counsel of record for both parties. The letters of consent have been filed with the Clerk of the Court.

SUMMARY OF THE ARGUMENT

The primary purpose of a patent is to promote the "Progress of Science and the useful Arts." U.S. Const., art. 1, § 8. Patent claims define the metes and bounds of the patent grant and notify the public as to the nature and scope

of the patentee's rights. However, the policies underlying the notice function of a patent do not trump the primary policy underpinning the State's monopoly grant: to protect a patentee's intellectual property rights. Thus, the notice function does not justify the Federal Circuit's radical decision to invoke an absolute bar on equivalents whenever a narrowing amendment related to patentability is made.

The Federal Circuit's decision in the case at bar conflicts with the principles undergirding the patent system in this country, and does not comport with well-settled international law. Furthermore, the decision is inconsistent with the explicit mandate of the WIPO and the GATT which promote the global harmonization of intellectual property protection laws. Neither the European Community or the Federal Republic of Germany have adopted such a delimited version of the doctrine of equivalents. Nor should the United States.

ARGUMENT

I. The Primary Function of a Patent Is to Promote the Progress of Science and Useful Arts.

Patents do not exist for the exclusive purpose of providing notice to potential infringers. Patents exist for the primary purpose of protecting, and circumscribing the bounds of, useful, novel and non-obvious intellectual property. The vaunted "notice function" with

which the federal courts have imbued United States patents, and on which the Federal Circuit rests its opinion in the case at bar, is merely an ancillary benefit of the bargained for exchange in which the State grants a patentee a monopoly right in order to "promote the Progress of Science and useful Arts." U.S. Const., art. 1, § 8; *see also*, 234 U.S. at 599-601, concurring and dissenting opinion, JJ. Michel and Rader, (observing that this Court in *Warner-Jenkinson Co. v. Hilton Davis Chemical Co.*, 520 U.S. 17 (1997) struck an appropriate balance between the notice function and a patentee's need for protection against copyists, and reasoning that "the substance of the communications between the applicant and the examiner may *further* notify the public as to additional limits on the enforceable scope of the patent claims.").

Therefore, the notice function, however significant, does not excuse the Federal Circuit's decision in *Festo*, requiring courts to invoke an absolute bar to equivalents whenever any narrowing amendment substantially related to patentability is made. *Festo Corp. v. Shoketsu Kinzoku Kogyo Kabushiki Co.*, 234 F.2d 558, 567 (Fed. Cir. 2000 ("*Festo*"). By narrowing the available range of equivalents, the decision contrives a poorly crafted mechanism for more precisely delimiting the boundaries of individual claim elements that ignores both the patent policy and precedent. *See generally* 234 F.3d 558, 601-615, and authorities cited therein. Yet, in so doing, the decision accomplishes little more than providing potentially infringing poachers with

ready access to low-hanging fruit. That the Federal Circuit cloaks its edict in the mantle of certainty does not change the fact that it has finally realized this Court's fifty-year old premonition that, absent a viable doctrine of equivalents, a United States patent would become a "hollow and useless thing." *Graver Tank and Mfg. Co. v. Linde Air Products Co.*, 339 U.S. 605, 607 (1950).

The decision of the Federal Circuit is inconsistent with both the well-settled law of the United States and with the laws of other industrialized members of the World Intellectual Property Organization ("WIPO") and other signatories to the General Agreement on Tariffs and Trade ("GATT"). Although there are appropriate circumstances under which the doctrine of equivalents is, and should be, restricted, the Federal Circuit's decision in the case at bar unnecessarily and inconsistently narrows the scope of patent protection in the United States. In view of the fact that the United States maintains the world's largest economy, it is remarkable that this country should maintain such narrow patent protection.

II. *Festo* Promotes Increased Uncertainty By Hollowing Certain Existing Patents.

The Federal Circuit majority enunciated two primary policy reasons for limiting the range of equivalents and expanding the scope of prosecution history estoppel: (1) "preserving the notice function of the claims"; and, (2) "preventing

patent holders from recapturing under the doctrine of equivalents subject matter that was surrendered before the Patent Office." 234 F.3d at 567. Neither of these reasons justifies or supports the Federal Circuit's decision.[2] Although the Federal Circuit propounds the notion that abolishing the "flexible bar" will enhance a patent's notice function and enhance certainty, both the limited anecdotal evidence that has been adduced since *Festo* was rendered, and policy, suggest the contrary. *See, e.g., Lower Courts' Festo Interpretations Are Increasing Uncertainty, Attorneys Told*, 18 No. 16 Andrews Computer & Online Indus. Litig. Rep. 7 (2001).

Thus, when the Federal Circuit concludes that the "notice function" has achieved a "paramount" importance in patent law, it stretches precedent. 234 F.3d at 575. *See*

---

[2] The *amicus curiae* does not address the circumstance where an element of a claim has been narrowed in such a way as to require that the element be implemented according to its literal terms. In such circumstances, equivalents are necessarily barred by the amendment. Further, the amicus curiae does not address the situation where a party expressly disclaims or deliberately excises, either in the prosecution history or the specification, certain claim scope. Petitioners make no challenge to the Federal Circuit's long standing rule that it is not possible to reclaim by equivalents claim scope that has been intentionally ceded. *See, e.g., Southwall Tech., Inc. v. Cardinal IG Co.*, 54 F.3d 1570, 1576 (Fed. Cir. 1995) (holding that "[t]he prosecution history limits the interpretation of claim terms so as to exclude any interpretation that was disclaimed during prosecution."). Instead, the instant argument is confined to whether any range of equivalents should be available in those cases where such equivalents continue to find adequate support in the amended specification.

generally Warner-Jenkinson; *Graver Tank and Mfg. Co. v. Linde Air Products Co.*, 339 U.S. 605 (1950). When the court bends to the perceived public appetite for certainty and abolishes the "flexible bar," it yields too much. While it is true, as the Federal Circuit complains in its majority opinion, that there are legitimate difficulties in managing the "flexible bar" approach, the solution the Federal Circuit has drawn improperly discards the baby with the bath water. Rather than entrusting to the lower courts the discretion to confront and resolve the complex issue of equivalents on a case-by-case basis, the Federal Circuit has incorrectly concluded that the lower courts need not render such decisions.

The Federal Circuit rationalizes its decision, in part, under the following rubric: "By narrowing his claims, a patentee disclaims subject matter encompassed by the original claims." 234 F.3d at 575. However, by strictly construing an applicant's amendment of his original subject matter where he amends over the prior art, the Federal Circuit's decision penalizes an applicant for amending his claims by requiring that he forfeit claim scope beyond that necessary to traverse the art. Such an arbitrary penalty is fundamentally inconsistent with the equitable roots of the doctrine of equivalents. *See* 234 F.3d at 592-96, concurring opinion, Plager, J., and authorities cited therein (reasoning that the doctrine of equivalents, "a judge-made rule in the first place," has "its roots firmly in equity.").

Furthermore, to the extent that a patentee

may be said to own the intellectual property defined by the claims of his patents and bounded by the equitable equivalents thereto, the Federal Circuit's decision and the resulting diminution in the value of existing patents is tantamount to an arbitrary and uncompensated taking. *See, e.g., Hughes Aircraft Co. v. United States*, 140 F.3d 1470 (Fed. Cir. 1998), abrogated, in part, by *Festo* (holding that prosecution history estoppel in light of *Warner-Jenkinson* did not preclude a finding of infringement against the United States government). This is particularly significant for ASTA Medica because it is currently in the process of divesting a part of the company, and the attending patents. As a result of the *Festo* decision, several existing United States patents which are to be divested may now possess a diminished value under *Festo*. Such an uncompensated taking, couched in terms of an inventor's voluntary surrender of claim scope, is made all the more egregious when it is justified only by a purported need to promote the certainty with which subsequent infringers may skirt liability.

The Federal Circuit recognized that "a flexible bar affords patentee more protection under the doctrine of equivalents." *Id.* at 578. However, it nevertheless determined to side with infringers, adding, "we do not believe that the benefits outweighs the cost of uncertainty." *Id.* In so deciding, the Federal Circuit reasoned that:

> a complete bar, unlike a flexible bar, thus lends certainty to the process of

> determining the scope of protection afforded by a patent. With a complete bar, both the public and the patentee know that once an element of a claim is narrowed by amendment for a reason related to patentability, that element's scope of coverage will not extend beyond its literal terms. There is no speculation or uncertainty as to the exact range of equivalents that might be available. This certainty aids both the public and the patentee in ascertaining the true scope and value of the patent without having to resort to litigation to obtain a case by case analysis of what subject matter the claims can cover. With a complete bar, neither the public nor the patentee is required to pay the transaction costs of litigation in order to determine the exact scope of subject matter the patentee abandoned when the patentee amended the claim.

Id. at 577.

However, the dire consequences that the Federal Circuit diagnoses in *Festo* are aggravated, rather than cured by its prescription. Indeed, because *Festo* applies retroactively, instead of reducing the amount of litigation that exists, *Festo* threatens to increase litigation costs dramatically. For example, *Festo* may actually encourage litigation by causing sophisticated

licensees to review, and potentially, to renege on, the agreements they have undertaken on patents whose claims may be argued no longer cover their intended product. ASTA Medica is currently engaged in an extensive international licensing program involving many of its United States patents, and it is possible that the value of its portfolio may be significantly diminished as a result of the *Festo* decision. Moreover, even a complete bar to equivalents is unlikely to stem the tide of patent litigation. Although *Festo* purports to obviate the uncertainties associated with contorted analyses of prosecution histories to determine what range of equivalents a claim element may possess, in reality, the decision compels a far more daunting quagmire. The ironclad estoppels contemplated under *Festo* would not preclude a court from rigorously interpreting the disputed elements of patent claims asserted during a suit; *Festo* does not eliminate patent litigation or its attendant complexity.

Moreover, the Federal Circuit has not reconciled the complete bar on equivalents with existing patent practice that provides no limitation on the range of available equivalents for identical unamended claims. The dichotomy is brought into relief by the fact that every patent claim, whether or not amended during prosecution is implicitly limited by the prior art. Regardless, all claims allowed by the United States Patent and Trademark Office (the "Patent Office" or "PTO") are equally valid at the time of issue. The Federal Circuit does not adequately

explain why, except in circumstances where claim scope is deliberately relinquished during prosecution, a claim should be so delimited. The "notice function" is not an answer; the infringing public could obtain adequate notice simply by a close examination of the existing public file wrappers, which would serve to identify the extent to which an applicant has surrendered or disclaimed certain claim scope versus the prior art.

In characterizing the flexible approach that precedent dictates as unworkable and adopting an absolute bar where a narrowing amendment substantially related to patentability is made, the Court of Appeals elevates form over substance. It further predicates the level of protection to which a patentee is entitled on how deftly and with what prescience that patentee drafted his patent application. *Festo* thus inconsistently rewards patentees depending upon the nature and extent of the prior art that is disclosed to the Patent Office during prosecution. As a practical matter, it is not always possible for an applicant to "get it right" on the first try and prepare claims that need not be amended during prosecution. Patent prosecution is a dynamic process involving a continuing exchange between an examiner and an applicant. Even the most diligent applicant and examiner may not be able to complete an exhaustive review of the existing prior art during prosecution.

However, it is not difficult to conceive a situation where a set of claims survives

prosecution unamended but nevertheless where these claims are later challenged in litigation based on prior art that was neither discovered nor disclosed previously. Under *Festo*, a patentee who is fortunate enough to obtain an allowance without amendment is rewarded with a more valuable patent than an applicant who must amend over a piece of art prior during prosecution (regardless as to whether the "unamended" claims of patentee, A, have a narrower literal scope than the "amended" claims of patentee, B). No logical reason exists to relegate a patentee who pursues a more diligent search of the prior art or who files a more prompt and comprehensive disclosure of prior art with the Patent Office, to second class status with a patent which can be easily circumvented. Yet this is precisely the result *Festo* invites.

The Federal Circuit improperly miscasts the issue as a policy conflict between the patentee and the general public, proclaiming that "[a]mendments 'must be strictly construed against the inventor and in favor of the public.' . . . . A complete bar also eliminates the public's need to speculate as to the subject matter surrendered . . . ." 234 F.3d at 576. However, the Federal Circuit's characterization both misses the mark and creates an unnecessary tension where none exists. A patentee only disclaims certain defined subject matter by amendment, and it is not the innocent public whom the notice function protects, but infringers who seek to trespass on a patentee's rights.

Festo does not accomplish the goals it purports to embrace; instead, it simply ratifies and rewards the activities of actual infringers. *Festo* raises the spectre of a diminution in value of United States patents, coupled with a surge in infringement and increased litigation. Research and development might further be stunted as a consequence of the anti-inventor bias that *Festo* has adopted. As such, it is not prudent public policy to deprive inventors of the fullest possible benefits of the patent laws of the United States.

III. *Festo* Limits the Scope of Patents in the United States Inconsistently With The Scope of Protection Afforded to Patents In Europe.

Furthermore, *Festo* is inconsistent with the United States' enunciated goal of global patent law harmonization. The WIPO, to which the United States is a signatory, proclaims global patent harmonization as an express objective. (*See generally* WIPO statement of objectives at the website:<http://www.wipo.int/about-wipo/en/index.html?wipo_content_frame=http://www.wipo.int/about-wipo/en/gib.htm>). The member States are in the process of refining a draft treaty designed to achieve this objective at a substantive level. (*See* Draft Substantive Patent Law Treaty, SCP/5/2, April 4, 2001.) The most recent version of Rule 11 of the Draft Regulations and Practice Guidelines addresses the interpretation of claims under Article 14 of the draft treaty and provides for a wide range of

equivalents that do not appear to accommodate *Festo's* absolute bar:

> (1) [Principle] For the purposes of Article 14(l), the claims shall be so interpreted as to combine fair protection for the applicant with a reasonable degree of certainty for third parties. Consequently, the claims shall not be interpreted as being necessarily confined to their strict literal wording. Neither shall the claims be considered as mere guidelines allowing that the protection conferred by the application extends to what, from a consideration of the description and drawings by a person skilled in the art, the applicant has contemplated, but has not claimed.
>
> [(2) [Equivalents] For the purposes of Article 14(2), an element shall generally be considered as being equivalent to an element as expressed in a claim if, at the time of any alleged infringement, it performs substantially the same function in substantially the same way and produces substantially the same result as the element as expressed in the claim, and it is obvious to a person skilled in the art that the same result as that achieved by means of the element as expressed in

> the claim can be achieved by means of the equivalent element.
>
> (3) [Prior Statements] In determining the scope of protection, due account shall be taken of any statement limiting the scope of the claims made by the applicant during procedures concerning the grant or the validity of the patent.]

Draft Regulations and Practice Guidelines Under the Draft Substantive Patent Law Treaty, SCP/5/3, April 4, 2001.

European patent law reflects these same standards. Article 69 of the European Patent Convention provides that "[t]he extent of protection conferred by a European patent . . . shall be determined by the terms of the claims. Nevertheless, the description and drawings shall be used to interpret the claims." European Patent Convention ("EPC") 2000, art. 69, ¶ 1. The Protocol on the Interpretation of Article 69 of the Convention further instructs that

> Article 69 should not be interpreted in that sense that the extent of the protection conferred by a European patent is to be understood as that defined by the strict, literal meaning of the wording used in the claims, the description and drawings being employed only for the purpose of resolving an ambiguity

found in the claims. Neither should it be interpreted in the sense that the claims serve only as a guideline and that the actual protection conferred may extend to what, from a consideration of the description and drawings by a person skilled in the art the patentee has contemplated. On the contrary it is to be interpreted as defining a position between these extremes which combines a fair protection for the patentee with a reasonable degree of certainty for third parties.

Protocol on the Interpretation of Article 69 of the Convention, adopted at the Munich Diplomatic Conference for the setting up of a European System for the Grant of Patents on October 5, 1973.

The Act Revising the Convention on the Grant of European Patents Art. 2(1) (Munich, Nov. 29, 2000) amended the Protocol to expressly provide for equivalents. ("due account shall be taken of any element which is equivalent to an element specified in the claims.") Thus it is plain that Europe has adopted the flexible bar approach of pre-*Festo* jurisprudence in the United States.

Germany also adheres to the principles announced by the WIPO, and is bound by Article 69. In the "moulded curbstone" decision, the

Supreme Court of Germany[3] stated that, pursuant to the Protocol on the Interpretation of Article 69 of the EPC, the scope of protection afforded by a patent grant may extend beyond the literal interpretation of the claims of a patent. (BGH Case No. X ZR 28/85 on April 29, 1986 "Moulded curbstone" (GRUR 1986, 803, 805).)[4]

The decision thus permitted a broad range of equivalents for the recited claim terms. For the determination of the scope of protection of a patent (range of equivalents) it is decisive whether the person skilled in the art was able to conclude for the "element" under scrutiny to have the same effect from the claims using the description (and the drawings) and based on his general knowledge. (*Id.*) This decision is entirely consistent with German jurisprudence which balances the competing objectives of adequately compensating the inventor for his contributions, while simultaneously taking into consideration the principle of legal certainty. (*See, e.g.*, BGH Case No. X ZR 5/87 on June 14, 1988 "Ion analysis" (GRUR 1988, 896, 899); BGH Case No. X ZR 63/87 on November 29, 1988 "Heavy metal oxidation catalyst" (GRUR 1989, 205, 208); BGH

---

[3] References made herein to the Supreme Court of Germany shall mean and refer to the Federal Supreme Court of Germany ("BGH"; Bundesgerichtshof in Karlsruhe). Citations are to the Bundesgerichtshof ("BGH") as published in the monthly legal magazine "Gewerblicher Rechtsschutz and Urheberrecht" ("GRUR").

[4] Copies of the German cases cited herein, and English translations of the relevant potions of these authorities were lodged with this Court simultaneously herewith.

Case No. X ZR 33/88 on October 3, 1989 "Handle cord for battery case" (GRUR 1989, 903, 904); BGH Case No. X ZR 6/91 on April 20, 1993 "Moistening device" [literal translation] (GRUR 1993, 886, 889).)

Although Germany, unlike the United States, has adopted a patent system where the potentially infringing defendant must demonstrate and prove "objections" to persuade the court to exclude certain equivalents from the scope of the patent, (BGH Case No. X ZR 22/97 on February 17, 1999 "Contact spring block" (GRUR 1999, 914, 918)), under German law, interpretation of the scope of a patent's claims is the province of the BGH and is of particular significance in circumstances where there is no literal infringement. Thus, under German law, the alleged infringer bears the burden of explaining and proving that a claim should be defined more narrowly, as in the United States, a patent holder in Germany is not entitled to equivalents that are demonstrably covered by the prior art. ((GRUR 1986, 803); BGH Case No. 1a ZR 10/63 on June 30, 1964 "Scanning needle" (GRUR 1964, 669, 672); BGH Case No. X ZR 46/76 on June 15, 1978 "Wind screen" (GRUR 1978, 699, 701).) Additionally, as in the United States prior to *Festo*, in determining whether, and to what extent, to limit the scope of a patent claim in Germany, the nature of an express abandonment or actual restriction made during the granting process must be considered. (GRUR 1978, 699, 701.)

However, under German law, a judge does not have the power to interpret the characteristic of a patent claim that is affected by an abandonment or restriction in such a way that equivalents are absolutely excluded, unless that is the necessary effect of the amendment. Instead, judges are required to interpret patent claims in each case by examining the reason, purpose, effect and substantive scope of any purportedly limiting restriction or abandonment to determine whether the abandonment and/or the restriction has an effect on the equivalents which are normally included in the scope of protection of the patent. (*See Benkard/Ullman*, PatG, [Patent Law], 9th edition, marginal number 84 in § 14.) Similarly, and in contrast to the interpretation of law by this Court in *Warner-Jenkinson Co. v. Hilton Davis Chemical Co.*, 520 U.S. 17 (1997), and by the Court of Appeals in *Festo*, German judicature does not presume against the patentee, and holds that if is it not possible to unequivocally determine the reason for the abandonment and/or restriction, the inability to do so does not condemn the patent holder to a bar on equivalents. In view of these principles, it is plain that *Festo's* absolute bar on equivalents is fundamentally inconsistent with well-settled principles of German judicature.

Thus, since every protective right must be allowed an adequate scope of protection, (BGH Case No. X ZR 74/94 on February 4, 1997 "Cable duct" (GRUR 1997, 455, 457)), it is the rare exception, rather than the rule, that a narrowed element of a claim is restricted exclusively to its

literal meaning. (*See Benkard/Ullmann, loc. cit.*, marginal number 82.) To the extent that any limit is placed on the range of equivalents available, as a rule, only very specific equivalents are excluded. (GRUR 1964, 669, 672.) The difficulty a judge may have in interpreting a narrowed claim language does not provide an excuse, under German law, for restricting that claim to its literal meaning. (*See* Schramm, Der Patentverletzungsproze ß [Patent infringement proceedings], 4th ed., 1999, page 100 ("Restrictions and abandonments that are still in effect today are not to be interpreted to mean that the patent can be handled without protective scope. This misunderstanding is occasionally encountered. Restrictions and abandonments merely ensure that the protection of the embodiment that had been excluded as a result of the restriction or abandonment cannot be recaptured by way of the interpretation or grant of a protective scope.").)

Therefore, even on a narrowing combination of claims, German law permits a broad range of equivalents. By contrast, *Festo* would bar any equivalents for an analogous narrowing combination of claims or claim elements in a United States patent. In contrast to the practice invoked by the Federal Circuit, German legal practice requires that a restricted patent claim, rare exceptions aside, be interpreted in such a way that the patent is granted an adequate scope of protection, including an appropriate range of equivalents. United States patent law should not afford its inventors or its patents any narrower protection.

CONCLUSION

Festo adopts a position which is inconsistent with both its stated purpose and decades of well-settled jurisprudence, both domestic and foreign. In view of the foregoing, it is respectfully requested that this Court grant the relief requested by the Appellants, Festo Corporation, and reverse and remand the lower court's decision for further proceedings consistent with this Court's decision.

Respectfully submitted,

Steven B. Kelber
Piper Marbury Rudnick
& Wolfe, LLP
1200 Nineteenth St., N.W.
Washington, D.C. 20036
(202) 861-3900

Counsel of Record

August 31, 2001

AUG 31 2001

No. 00-1543

Supreme Court, U.S.
FILED
AUG 31 2001
OFFICE OF THE CLERK

In The

Supreme Court of the United States

FESTO CORPORATION,

Petitioner,

v.

SHOKETSU KINZOKU KOGYO KABUSHIKI CO., LTD., a/k/a SMC CORPORATION and SMC PNEUMATICS, INC.,

Respondents.

On Writ Of Certiorari To The United States Court Of Appeals For The Federal Circuit

BRIEF OF *AMICUS CURIAE* PHILADELPHIA INTELLECTUAL PROPERTY LAW ASSOCIATION IN SUPPORT OF PETITIONER

MANNY D. POKOTILOW*
CAESAR, RIVISE, BERNSTEIN, COHEN & POKOTILOW, LTD.
Seven Penn Center
1635 Market Street
Philadelphia, PA 19103
215-567-2010

JOAN TAFT KLUGER
SCHNADER HARRISON SEGAL & LEWIS LLP
1600 Market Street
Philadelphia, PA 19103
215-751-2357

SALVATORE R. GUERRIERO
CAESAR, RIVISE, BERNSTEIN, COHEN & POKOTILOW, LTD.
Seven Penn Center
1635 Market Street
Philadelphia, PA 19103
215-567-2010

**Counsel of Record*

Counsel for Amicus Curiae

COCKLE LAW BRIEF PRINTING CO., (800) 225-6964
OR CALL COLLECT (402) 342-2831

17 pp

TABLE OF CONTENTS

	Page
TABLE OF AUTHORITIES	ii
STATEMENT OF INTEREST	1
CONSENT TO FILING OF *AMICUS CURIAE* BRIEF	1
SUMMARY OF ARGUMENT	2
ARGUMENT	3
I. Reducing the Scope of Patent Protection Decreases Incentive to Disclose Inventions	3
II. Amendments Necessitated by the Complexity of Patent Law and Patented Technology Should not Diminish a Patentee's Right to Equivalents	6
III. The Complete Bar Rule is Contrary to a Rational and Sound Policy to Protect Intellectual Property	8
IV. The Scope of Patent Claims Should be Interpreted Using All Intrinsic Evidence	10
A. Prosecution History is Intrinsic Evidence of Patent Scope	10
B. Evaluating Prosecution History under a Flexible Bar is not Unworkable	11
V. Conclusion	13

TABLE OF AUTHORITIES

Page

Federal Cases

ACLARA Biosciences, Inc. v. Caliper Technologies Corp., 125 F. Supp. 2d 391 (N.D. Cal. 2000) 12

Aronson v. Quick Point Pencil Co., 440 U.S. 257, 99 S. Ct. 1096 (1979) 3

Autogiro Co. of America v. United States, 384 F.2d 391 (Ct. Cl. 1967) 6, 7

Creo Products, Inc. v. Presstek, Inc., No. C.A. 99-525-GMS, 2001 WL 637397 at 7 (D. Del. May 11, 2001) 12

Festo Corp. v. Shoketsu Kinzoku Kogyo Kabushiki Co., Ltd., 234 F.3d 558 (Fed. Cir. 2000), *cert. granted*, 121 S. Ct. 2519 (2001) ..... *passim*

Graham v. John Deere Co. of Kansas City, 383 U.S. 1, 86 S. Ct. 684 (1966) 10

Graver Tank & Manufacturing Co. v. Linde Air Products Co., 339 U.S. 605, 70 S. Ct. 854 (1950) 4

Kewannee Oil Co. v. Bicron Corp., 416 U.S. 470, 94 S. Ct. 1879 (1974) 3

Litton Systems, Inc. v. Honeywell, Inc., 145 F.3d 1472 (Fed. Cir. 1998) 7

Markman v. Westview Instruments, Inc., 52 F.3d 967 (Fed. Cir. 1995), *aff'd*, 517 U.S. 370, 116 S. Ct. 1384 (1996) 10

TM Patents, LLP v. International Business Machines, 136 F. Supp. 2d 209 (S.D.N.Y. 2001) 11, 12

TABLE OF AUTHORITIES – Continued

Page

Topliff v. Topliff, 145 U.S. 156, 12 S. Ct. 825 (1892) 6

Vitronics Corp. v. Conceptronic, Inc., 90 F.3d 1576 (Fed. Cir. 1996) 10

Warner-Jenkinson Co. v. Hilton Davis Chemical Co., 520 U.S. 17, 117 S. Ct. 1040 (1997) 2

Federal Statutes

H.R. Rep. No. 106-287(I), 106th Cong., 1st Sess. (Aug. 3, 1999) 8, 9

Pub. L. No. 106-113, Div. B, Title IV (§§ 4001 to 4808), 113 Stat. 1501, 1501A-552 (1999) 8

Miscellaneous

AIPLA Economic Survey, 78-79 (2001) 4, 5

STATEMENT OF INTEREST[1]

The Philadelphia Intellectual Property Law Association ("PIPLA") was established to advocate the United States Constitution provision for the promotion of science and the useful arts; to promote the development and administration of the patent, trademark and copyright laws; to increase knowledge of intellectual property law; and to further high standards of professional ethics and promote professional relationships in the intellectual property law field. PIPLA members and their clients depend upon consistent application of the doctrine of equivalents to ensure the protection of their present and future rights under the patent laws.

PIPLA has no stake in either of the parties to this appeal or in the outcome of the appeal, other than its interest in seeking correct and consistent interpretation of the law affecting intellectual property.

CONSENT TO FILING OF *AMICUS CURIAE* BRIEF

In accordance with Supreme Court Rule 37.3(a), PIPLA has obtained written consent to the filing of this *amicus curiae* brief from the counsel of record for both parties. The written consents of the parties are being filed with Clerk of Court and accompany this brief.

---

[1] Pursuant to Supreme Court Rule 37.6, *amicus curiae* states that this brief was not authored, in whole or in part, by counsel to a party, and that no monetary contribution to the preparation or submission of this brief was made by any person or entity other than the *amicus curiae* or its counsel.

SUMMARY OF ARGUMENT

The Court of Appeals for the Federal Circuit, in *Festo Corp. v. Shoketsu Kinzoku Kogyo Kabushiki Co., Ltd.*, 234 F.3d 558 (Fed. Cir. 2000) (*en banc*), *cert. granted*, 121 S. Ct. 2519 (2001) ("*Festo*"), has, to a substantial degree, eliminated the doctrine of equivalents – a principle that this Court reaffirmed in *Warner-Jenkinson Co. v. Hilton Davis Chem. Co.*, 520 U.S. 17, 117 S. Ct. 1040 (1997). PIPLA supports a reversal by the Supreme Court of the finding that no range of equivalents is available for a claim element that was narrowed for reasons related to patentability during prosecution. Instead, the Court is requested to make clear that a range of equivalents should always be available for a claimed element to the extent that the inventor has not disclaimed the accused element and the claim remains patentable over the prior art.

The principle sought by PIPLA is protection of the full scope of the invention in return for the benefit to the public of the full disclosure by the inventor to promote the progress of the arts as envisioned by Article 1, Section 8 of the United States Constitution.

PIPLA maintains that protection of all subject matter disclosed and not disclaimed is imperative to provide incentive to obtain patent protection, and thus, disclose innovative technology. Lesser protection causes the cost of obtaining and enforcing patents to outweigh the benefit, thereby stifling incentive.

ARGUMENT

I. Reducing the Scope of Patent Protection Decreases Incentive to Disclose Inventions.

As this Court has often explained, the goals of the patent laws, as authorized by Article 1, Section 8 of the United States Constitution, are to encourage invention and disclosure. *Kewannee Oil Co. v. Bicron Corp.*, 416 U.S. 470, 480-81, 94 S. Ct. 1879, 1885-86 (1974); *Aronson v. Quick Point Pencil Co.*, 440 U.S. 257, 262, 99 S. Ct. 1096, 1099 (1979) ("First, patent law seeks to foster and reward invention; second, it promotes disclosure of inventions, to stimulate further innovation and to permit the public to practice the invention once the patent expires. . . . "). The patent laws do so by rewarding an inventor with patent protection of an exclusive monopoly for a limited period of time. *Id.* at 480, *id.* at 1885 ("The patent laws promote this progress by offering a right of exclusion for a limited period as an incentive to inventors to risk the often enormous costs in terms of time, research, and development."). The "doctrine of equivalents" further encourages invention and disclosure and strengthens patent protection, by preventing competitors from easily avoiding infringement:

> courts have also recognized that to permit imitation of a patented invention which does not copy every literal detail would be to convert the protection of the patent grant into a hollow and useless thing. Such a limitation would leave room for – indeed encourage – the unscrupulous copyist to make unimportant and insubstantial changes and substitutions in the patent which, though adding nothing, would be enough to

> take the copied matter outside the claim, and hence outside the reach of law. One who seeks to pirate an invention, like one who seeks to pirate a copyrighted book or play, may be expected to introduce minor variations to conceal and shelter the piracy. Outright and forthright duplication is a dull and very rare type of infringement. To prohibit no other would place the inventor at the mercy of verbalism and would be subordinating substance to form. It would deprive him of the benefit of his invention and would foster concealment rather than disclosure of inventions, which is one of the primary purposes of the patent system.

Graver Tank & Mfg. Co. v. Linde Air Products Co., 339 U.S. 605, 607, 70 S. Ct. 854, 856 (1950). Because practically all patents are amended during the application process, it is the view of PIPLA that the complete bar rule adopted in *Festo* frustrates these goals by forfeiting all protection under the doctrine of equivalents whenever applicants amend their claims.

An inventor weighs the cost of obtaining patent protection against the benefit a patent provides. The *Festo* decision decreases the protection afforded by a patent, thereby tilting the scales away from obtaining patent protection, and thus, hindering technical advancement of the nation.

According to the American Intellectual Property Law Association ("AIPLA") Report of Economic Survey 2001, the median cost of preparing a patent application is between approximately $8,000 and $10,000. *AIPLA Economic Survey*, 78-79 (2001). Further median costs associated with the prosecution of the application range

between $1,200 and $2,500 per amendment/argument and $3,000 to $5,000 for an appeal. *Id.* at 79-80. In addition, the cost of enforcing a patent is often prohibitively high – the median cost of a patent infringement lawsuit through trial is about $499,000 if $1 million is at risk, and $2,992,000 if more than $25 million is at risk. *Id.* at 84-85. Narrowing patent scope frustrates enforcement of patents, and consequently reduces incentive to invent and disclose the invention to the public.

By asserting the principle of full protection in exchange for public benefits, the Supreme Court can avoid the anomalous situation where a claim may be infringed under the doctrine of equivalents if written in that manner originally, but would not be infringed if by reason of negotiation between the inventor and the United States Patent and Trademark Office ("USPTO"), the same claim was arrived at by amendment. This, in turn, will preserve the integrity of the United States patent system, which will continue to provide inventors with the incentive to invent and protection of their inventions.

II. Amendments Necessitated by the Complexity of Patent Law and Patented Technology Should not Diminish a Patentee's Right to Equivalents.

A flexible bar is imperative to providing patentees with the rights to the full scope of their inventions disclosed to the public, and thus, incentive to obtain patent protection. Amendments necessitated by the complexity of patent law and patented technology should not diminish a patentee's right to equivalents. "The very nature of words would make a clear and unambiguous claim a rare occurrence." *Autogiro Co. of America v. United States*, 384 F.2d 391, 396 (Ct. Cl. 1967). The difficulty in claim drafting gives rise to a significant percent of amended claims, causing the majority of claims not to encompass equivalents based on the complete bar rule provided under *Festo*.

Patent claims define the scope of the invention. Unlike clauses in many other legal documents, claims are far from boilerplate terms or terms easily modified to fit specific circumstances. Claims often require significantly more skill in drafting than typical contract clauses, primarily due to the technical subject matter. This Court long ago characterized a patent as "one of the most difficult legal instruments to draw with accuracy." *Topliff v. Topliff*, 145 U.S. 156, 171, 12 S. Ct. 825, 831 (1892). The Court of Claims has commented on the difficulty of claiming an invention, stating:

> An invention exists most importantly as a tangible structure or a series of drawings. A verbal portrayal is usually an afterthought written to

> satisfy the requirements of patent law. This conversion of machine to words allows for unintended idea gaps which cannot be satisfactorily filled.

Autogiro Co. of America v. United States, 384 F.2d 391, 397 (Ct. Cl. 1967). The doctrine of equivalents equitably accounts for these recognized limitations of the English language and the inability of an applicant to predict the form of equivalent future technology, by providing patentees with protection of the essence of their invention and not merely what is literally expressed.

Patentees and USPTO examiners strive to draft patent claims that are clear and unambiguous to provide notice, an important part of our patent system. Federal Circuit Judge Newman has written,

> Every patent practitioner knows how rare it is to conclude patent examination with claims that have not undergone amendment during prosecution, based on the examiner's rejections on grounds of patentability. It is routine for claims to be rewritten several times during the give-and-take of the examination procedure.

Litton Systems, Inc. v. Honeywell, Inc., 145 F.3d 1472, 1479 (Fed. Cir. 1998) (Newman, J., views on the suggestion for rehearing in banc). Patentees should not be penalized for amendments made during the give-and-take with the USPTO in the pursuit of perfection by implementing the complete bar rule, which lessens patent scope.

III. The Complete Bar Rule is Contrary to a Rational and Sound Policy to Protect Intellectual Property.

The United States patent system recently underwent an extensive overhaul by the implementation of the American Inventors Protection Act of 1999 ("AIPA"). *See* Pub. L. No. 106-113, Div. B, Title IV (§§ 4001 to 4808), 113 Stat. 1501, 1501A-552 (1999). The AIPA legislative history evidences Congress' intent to maintain America's position as a world leader with respect to technological advancement by streamlining our patent system and providing incentive to invent. The Federal Circuit's holding in *Festo* impedes these objectives of the AIPA.

The AIPA legislative history provides that,

> The United States is by far the world's largest producer of intellectual property, which has greatly benefited our balance of trade. This success is dependent upon a rational and sound policy of protecting intellectual property by encouraging the development of new inventions and processes.

H.R. REP. No. 106-287(I), 106th Cong., 1st Sess. (Aug. 3, 1999).

The *Festo* decision discourages development of new inventions and processes. *Festo's* complete bar rule minimizes the application of the doctrine of equivalents in patent infringement litigation, thereby decreasing the scope of the patent. The ease with which competitors will be able to design around patented inventions, when there is little or no coverage for equivalents, will provide further disincentive to inventors from using the patent system, which in turn deprives society of the benefits of

innovation. When a simple change in a device or process will avoid infringement, incentive to develop significant improvements in technology will be lost. This will diminish the United States' position as the world's largest producer of intellectual property and will negatively affect our balance of trade, which is contrary to the important objectives of the AIPA as expressed by Congress.

It is imperative that the United States provides an efficient and effective means for obtaining patent protection to attain these objectives. Congress recognized the importance of providing timely patent protection to meet these objectives when it implemented the AIPA. An objective was to streamline operations at the Patent and Trademark Office. *See* H.R. REP. No. 106-287(I), 106th Cong., 1st Sess. (Aug. 3, 1999). The Federal Circuit's holding in *Festo*, however, will slow down the patent prosecution process by creating a need to obtain patent protection without amending claims to avoid loss of protection of equivalents by prosecution estoppel. Patentees will be forced into adversary roles against patent examiners to convince examiners to allow claims without amendments. Exceedingly more cases will be appealed to avoid claim amendment. This will greatly increase the time and expense of patent prosecution for the USPTO and patent applicants, and will likely deter inventors from disclosing their inventions to seek patent protection. This may negatively affect the United States' position as the world's largest producer of intellectual property.

IV. The Scope of Patent Claims Should be Interpreted Using All Intrinsic Evidence.

A. Prosecution History is Intrinsic Evidence of Patent Scope.

Under *Festo*, patent prosecution history becomes irrelevant in numerous actions involving allegedly infringed claim elements that were amended during prosecution. The prosecution history, however, is important intrinsic evidence, and should be weighed to evaluate all claims of infringement. *See Markman v. Westview Instruments, Inc.*, 52 F.3d 967, 979 (Fed. Cir. 1995) *(en banc), aff'd*, 517 U.S. 370, 116 S. Ct. 1384 (1996).

"It is well settled that an invention is construed not only in light of the claims, but also with reference to the file wrapper or prosecution history in the Patent Office." *Graham v. John Deere Co. of Kansas City*, 383 U.S. 1, 33, 86 S. Ct. 684, 702 (1966). The prosecution history "is often of critical significance," because it may be used to determine the scope and meaning of the claims. *Vitronics Corp. v. Conceptronic, Inc.*, 90 F.3d 1576, 1582 (Fed. Cir. 1996). Prosecution history may provide insight into claim element equivalents even when a claim element has been narrowed for reasons related to patentability. The reasons for such amendments, which are likely to be provided in the prosecution history, should be considered to determine if a range of equivalents is available. Only disclaimed parameters should give rise to prosecution estoppel. This will afford inventors protection for the full scope of their inventions, and thereby, maintain incentive to disclose the inventions.

Claims are initially drafted to define what the patentee considers to be the scope of the invention. During prosecution the drafting process continues with claim scope continually being considered by the applicant and the patent examiner. The result is a prosecution history that may clearly evidence what the patentee and Patent Office view as the claimed invention, including what may or may not be reasonably included in the scope of equivalents. Claim scope should not be limited when intrinsic prosecution history evidence is available to shed light on reasonable equivalents.

B. Evaluating Prosecution History under a Flexible Bar is not Unworkable.

The Federal Circuit argues that evaluating prosecution history evidence in numerous circumstances is unworkable, and defines "workable rules" as rules that "can be relied upon to produce consistent results and give rise to a body of law that provides guidance to the marketplace on how to conduct its affairs." *Festo*, 234 F.3d at 575. The court, however, provides no evidence of inconsistent results. It is unlikely that inconsistent application of the doctrine of equivalents, as occurs with a complete bar, would produce more consistent results than a flexible bar that takes into consideration the circumstances surrounding amendments to determine the scope of equivalents. In fact, district courts are finding the *Festo* complete bar rule difficult to implement.

For example, the U.S. District Court of the Southern District of New York, in *TM Patents, LLP v. International Business Machines*, 136 F. Supp. 2d 209, 210 (S.D.N.Y.

2001), granted IBM's motion for summary judgment by applying the complete bar rule and finding that allegedly "clarifying" amendments made in response to a Section 112 rejection were narrowing, and therefore, the doctrine of equivalents could not be implemented to find infringement. In applying the complete bar rule, the Court stated:

> [T]he Court is faced with one of those convoluted questions that bedevil those of us who are not skilled in the art of patent law . . . can a claim limitation that cannot be infringed by equivalents (because of *Festo*) be literally infringed by the equivalent of a feature defined in a limitation within the same claim that can be infringed by equivalents (because it is not subject to *Festo*)? I confess that at present I have no answer to this question. In fact, I can barely articulate it.

Id. at 223. Furthermore, the U.S. District Court of the Northern District of California proclaimed, "applying *Festo* is not that simple." *See ACLARA Biosciences, Inc. v. Caliper Technologies Corp.*, 125 F. Supp. 2d 391, 400 (N.D. Cal. 2000). Similarly, the U.S. District Court for the District of Delaware stated:

> As with all broad pronouncements, the devil is in the details. In the immediate aftermath of *Festo*, district courts (and litigants) are *struggling* to interpret its breadth and applicability. (Emphasis added.)

Creo Products, Inc. v. Presstek, Inc., No. C.A. 99-525-GMS, 2001 WL 637397 at *7 (D. Del. May 11, 2001).

By considering only that an element was narrowed by amendment for a reason related to patentability, and

not considering the total circumstances surrounding the amendment, which is often contained in the prosecution history, significant intrinsic evidence is ignored.

V. CONCLUSION

There is already sufficient disincentive to filing patent applications because of cost. The complete bar rule adopted in *Festo* further discourages technical advancement by reducing incentive to invent, invest in and disclose new technology.

The Philadelphia Intellectual Property Law Association supports a return to the flexible bar which applies prosecution history estoppel only where claims are amended for a limited set of reasons, and accordingly, grants to patentees, protection of the full scope of their patented inventions.

Respectfully submitted,

MANNY D. POKOTILOW*
CAESAR, RIVISE, BERNSTEIN, COHEN & POKOTILOW, LTD.
Seven Penn Center
1635 Market Street
Philadelphia, PA 19103
215-567-2010

JOAN TAFT KLUGER
SCHNADER HARRISON SEGAL & LEWIS LLP
1600 Market Street
Philadelphia, PA 19103
215-751-2357

SALVATORE R. GUERRIERO
CAESAR, RIVISE, BERNSTEIN, COHEN & POKOTILOW, LTD.
Seven Penn Center
1635 Market Street
Philadelphia, PA 19103
215-567-2010

Counsel for Amicus Curiae
Philadelphia Intellectual Property Law Association

**Counsel of Record*

AUG 31 2001

29

Supreme Court, U.S.
FILED
AUG 31 2001
OFFICE OF THE CLERK

No. 00-1543

IN THE

Supreme Court of the United States

FESTO CORPORATION,

Petitioner,

v.

SHOKETSU KINZOKU KOGYO KABUSHIKI CO., LTD., a/k/a SMC CORPORATION and SMC PNEUMATICS, INC.,

Respondents.

ON WRIT OF CERTIORARI TO THE UNITED STATES COURT OF APPEALS FOR THE FEDERAL CIRCUIT

BRIEF OF THE INSTITUTE OF ELECTRICAL AND ELECTRONICS ENGINEERS – UNITED STATES OF AMERICA AS AMICUS CURIAE IN SUPPORT OF NEITHER PARTY

ANDREW C. GREENBERG
Counsel of Record
MATTHEW J. CONIGLIARO
C. DOUGLAS MCDONALD
CARLTON FIELDS, P.A.
777 S. Harbour Island Blvd.
Tampa, Florida 33602
(813) 821-7000

Attorneys for Amicus Curiae Institute of Electrical and Electronics Engineers – United States of America (IEEE-USA)

36 pp

TABLE OF CONTENTS

	Page
TABLE OF CITED AUTHORITIES	iii
INTEREST OF AMICUS CURIAE	1
INTRODUCTION AND SUMMARY OF ARGUMENT	3
ARGUMENT	4
I. The Progress Of The Useful Arts Is Not Adequately Promoted Under Either The Absolute Bar Or Flexible Bar Rules Advanced By The Parties.	4
A. Inventors Contribute to Progress Through Both Pioneering Inventions And Technological Improvements.	5
B. Patent Law Should Balance the Protective And Notice Functions And Thereby Promote Progress Through Both Pioneering Inventions And Technological Improvements.	8
C. The Absolute Bar And Flexible Bar Approaches To Prosecution History Estoppel Advanced By The Parties Fail To Balance Patents' Protective And Notice Functions And To Encourage Both Pioneer And Incremental Innovations.	12

Contents

Page

II. Application of Prosecution History Estoppel Strikes An Appropriate Balance Of Patent Policies Only When The Limiting Effect Of An Amendment With Respect To An Accused Device Would Have Been Foreseeable At The Time Of The Amendment. 18

A. The Foreseeable Bar Rule Is Consistent With Patent Policies And Harmonizes The Precedent Of This Court And The Federal Circuit. 19

B. The Foreseeable Bar Rule Overcomes the Failings Of The Absolute Bar And The Flexible Bar. 23

CONCLUSION 29

TABLE OF CITED AUTHORITIES

Page

Cases:

Bloomer v. McQuewan, 55 U.S. (14 How.) 539 (1852) 8

Bonito Boats, Inc. v. Thunder Craft Boats, Inc., 489 U.S. 141 (1989) 9

Emerson v. Davies, 8 F. Cas. 615 (C.C.D. Mass. 1845) 7

Exhibit Supply Co. v. Ace Patents Corp., 315 U.S. 126 (1942) 10, 22

Graham v. John Deere Co., 383 U.S. 1 (1966) 5

Graver Tank & Mfg. Co. v. Linde Air Products Co., 339 U.S. 605 (1950) 10, 16, 20

Hadley v. Baxendale, 156 Eng. Rep. 145 (1854) .. 19

Hughes Aircraft Co., v. United States, 717 F.2d 1351 (Fed. Cir. 1983) ..... *passim*

Kewanee Oil Co. v. Bicron Corp., 416 U.S. 470 (1974) 8

Kinzenbaw v. Deere & Co., 741 F.2d 383 (Fed. Cir. 1984) 15, 20, 22

Page

Markman v. Westview Instruments, Inc., 517 U.S. 370 (1996) 9, 14, 21

Mazer v. Stein, 347 U.S. 201 (1954) 5

McLain v. Ortmayer, 141 U.S. 419 (1891) 9

Palsgraf v. Long Island R.R.. Co., 162 N.E. 99 (N.Y. 1928) 19

Parkland Hosiery Co. v. Shore, 439 U.S. 322 (1979) 20

Prodyne Enterprises, Inc. v. Julie Pomerantz, 743 F.2d 1581 (Fed. Cir. 1984) 18

Rite-Hite Corp. v. Kelley Co., Inc., 56 F.3d 1538 (Fed. Cir. 1995) 19

Sage Products v. Devon Industries, 126 F.3d 1420 (Fed. Cir. 1997) 21, 22, 24

Slimfold Mfg. Co. v. Kinkead Indus. Inc., 932 F.2d 1453 (Fed. Cir. 1991) 6

Sony Corp. v. Universal City Studios, Inc., 464 U.S. 417 (1984) 6

Union Carbon Co. v. Binney & Smith Co., 317 U.S. 228 (1942) 14

Page

Warner-Jenkinson Co., Inc. v. Hilton Davis Chem. Co., 520 U.S. 17 (1997) 6, 10, 16, 28

Westinghouse v. Boyden Power Brake Co., 170 U.S. 537 (1898) 5

White v. Dunbar, 119 U.S. 47 (1886) 11

Winans v. Denmead, 56 U.S. (15 How.) 330 (1854) 10, 16

United States Constitution:

U.S. CONST. Art. I, § 8, cl. 8 4

Statutes:

28 U.S.C. § 1295(a) 12

35 U.S.C. § 112 8

35 U.S.C. § 271(a) 8

Cited Authorities

Page

Other Authorities:

RESTATEMENT (SECOND) OF CONTRACTS § 90 (1981) . 20

Peter F. Lake, *Common Law Duty in Negligence Law*, 34 SAN DIEGO L. REV. 1053 (1997) 19

Robert P. Merges & Richard R. Nelson, *On the Complex Economics of Patent Scope*, 90 COLUM. L. REV. 839 (1990) 11

Mark A. Lemley, *The Economics of Improvement in Intellectual Property Law*, 75 TEX. L. REV. 989 (1997) 8, 11

HENRY PETROSKI, THE EVOLUTION OF USEFUL THINGS 45 (1992) 6

Suzanne Scotchmer, *Standing on the Shoulders of Giants: Cumulative Research and the Patent Law*, 5 J. ECON. PERSP. 29 (1991) 7

BRIEF OF INSTITUTE OF ELECTRICAL AND ELECTRONICS ENGINEERS – UNITED STATES OF AMERICA (IEEE-USA) AS AMICUS CURIAE IN SUPPORT OF NEITHER PARTY[1]

INTEREST OF AMICUS CURIAE

The Institute of Electrical and Electronics Engineers - United States of America (IEEE-USA) promotes the career and technology policy interests of the nearly two hundred and thirty thousand electrical, electronic and computer engineers who comprise its United States membership. IEEE-USA is an organizational unit of The Institute of Electrical and Electronics Engineers, Inc. (IEEE), a New York Corporation. The vision of the IEEE is to advance global prosperity by fostering technological innovation and promoting the engineering community worldwide. The IEEE promotes the engineering process of creating, developing, integrating, sharing and applying knowledge about electronics and information technologies and sciences for the benefit of the profession and humanity.

IEEE-USA members serve on the "front line" of the United States patent system. They are pioneer inventors, inventors of novel improvements and designers of innovative refinements of the state of the art. They are entrepreneurs and employees of firms that acquire, license and exploit the intellectual property assets resulting from those activities. For these reasons, the IEEE-USA is deeply concerned that

1. In accordance with Supreme Court Rule 37.6, IEEE-USA states that this brief was authored in its entirety by the counsel listed on the cover and that counsel to a party did not author this brief in whole or in part. No person or entity other than the amicus curiae and its counsel made a monetary contribution to the preparation or submission of this brief. The consents of the parties are being lodged herewith.

sufficient incentive be given to inventors to innovate without unduly chilling the creation and development of non-infringing technology and improvements.

IEEE-USA members and other engineers routinely advise firms about the relative merit of the state of the art as compared with the merit and risk of competing lines of research and design. That advice, and with it progress itself, will be impacted favorably or adversely, depending on how the nation executes its patent policies.

As an organization dedicated to promoting sound technology and public policy applicable to United States electrical, electronics and computer engineers, the IEEE-USA has a compelling interest in ensuring that legal principles governing patent policy comport with the policies set forth by the Founders. Rules of the patent system intimately affect the practices of and advice given by engineers, and the IEEE-USA respectfully suggests that the patent law doctrines sanctioned by this Court should be rendered so far as possible in a manner that not only promotes progress in the manner intended by the Constitution but that is both comprehensible and practical to the professionals who provide that progress.

By virtue of the practical experience of its members, the IEEE-USA respectfully believes that its views will aid this Court in the resolution of the issues raised in this appeal. In accordance with the by-laws of the IEEE, the IEEE-USA Board of Directors has authorized the filing of this brief.

INTRODUCTION AND SUMMARY OF ARGUMENT

Consistent with the charge of the Patent Clause of the United States Constitution, Congress crafted a patent scheme that promotes the progress of the "useful Arts." The patent instrument designed by Congress seeks to achieve this constitutional end by providing both a protective function to inventors and a notice function to the public. This Court has recognized these fundamental policies on numerous occasions, and the questions presented by this proceeding require the Court to determine how these policies are best effectuated when the judicially created doctrine of equivalents is limited by application of another judicially created doctrine, prosecution history estoppel.

Neither *Festo Corp. v. Shoketsu Kinzoku Kogyo Kabushito Co., Ltd.*, 234 F.3d 558 (Fed. Cir. 2000), nor *Hughes Aircraft Co. v. United States*, 717 F.2d 1351 (Fed. Cir. 1983), define a workable and just framework for balancing patents' protective and notice functions. The IEEE-USA concurs with arguments made by the parties and other amici criticizing the "absolute bar" and "flexible bar" approaches set forth in these cases. The absolute bar of *Festo* improperly treats the notice function of a patent as paramount, severely diluting necessary patent protections and disproportionately encouraging minor variations, or mere copies, over genuine technological improvements and more fundamental, pioneering innovations. The flexible bar of *Hughes*, on the other hand, heightens the protective function in a manner that sacrifices much of the notice function, resulting in uncertainty regarding patented bounds that discourages incremental innovation through technological improvements. Under either rule, progress is not best served.

The IEEE-USA suggests that the flexible bar's deficiencies may be cured without resorting, as the Federal Circuit did below, to the absolute bar. As detailed hereafter, the IEEE-USA strongly recommends that this Court adopt instead a "foreseeable bar," by which the doctrine of equivalents should apply, notwithstanding a limiting amendment during a patent's prosecution, unless the limiting effect of the language with respect to an accused device would have been foreseeable at the time of the amendment. Such a rule is supported by case law from this Court and the Federal Circuit and presents the best means of effectuating patents' protective and notice functions to promote all forms of progress, including both pioneering inventions and technological improvements.

Unlike the flexible and absolute bars, the foreseeable bar is workable. It would be comprehensible to the professionals governed by the Patent Act and readily applied and reviewed by the judiciary. It also avoids the most extreme examples of injustice associated with *Festo* and *Hughes*. Most importantly, it best serves the policies underlying the Patent Clause and the Patent Act by most fully promoting progress of the "useful Arts."

ARGUMENT

I. The Progress Of The Useful Arts Is Not Adequately Promoted Under Either The Absolute Bar Or Flexible Bar Rules Advanced By The Parties.

The Patent Clause broadly directs that the Congress shall have the power to "promote the Progress of . . . useful Arts, by securing for limited Times to . . . Inventors the exclusive Right to their . . . Discoveries." U.S. CONST. Art. I, § 8, cl. 8. Crafting a statutory scheme to achieve this objective is the work of Congress, while enforcing that scheme in the manner

that best comports with congressional intent and constitutional purpose is the obligation of the judiciary. *Graham v. John Deere Co.*, 383 U.S. 1, 5-6 (1966).

The parties to this case present the Court with polar opposite views regarding how limiting amendments made to the claims of a patent during its prosecution affect a patent's scope and, thus, its enforceability. As the Court is aware, the Federal Circuit previously adopted the petitioner's position and has now adopted the respondent's position. In the IEEE-USA's view, neither position adequately fulfills the purposes embodied in both the Patent Clause and the Patent Act, which encourage both technological improvements and pioneering inventions through a careful balance of patents' protective and notice functions.

A. Inventors Contribute to Progress Through Both Pioneering Inventions And Technological Improvements.

The chief aim of the Patent Clause is to promote the public welfare by encouraging advancements in knowledge. *Mazer v. Stein*, 347 U.S. 201, 219 (1954). Innovation generally takes one of two basic forms: pioneering inventions and technological improvements. The Patent Clause and the Patent Act must be viewed to encourage both types of innovation, each of which is critical to the continued advancement of science and, thus, the public good.

A pioneering invention can be defined as something that performs a function never before performed – "a wholly novel device, or one of such novelty and importance as to mark a distinct step in the progress of the art. . . ." *Westinghouse v. Boyden Power Brake Co.*, 170 U.S. 537, 561-62 (1898). By comparison, technological improvements are useful, though often minor, advances over the previously

existing technology. However, even minor changes to prior art may be wholly unobvious before an invention is disclosed and of fundamental importance to the usefulness of an invention. The most useful and novel inventions and improvements may be progressive steps that are, in turn, dependent upon other previous steps of prior invention. HENRY PETROSKI, THE EVOLUTION OF USEFUL THINGS 45 (1992).

Technological improvements may be the result of independent discoveries or intentional efforts to "design around," and thereby avoid the claims of, a patent. In either case, progress is served through innovation. Indeed, unlike copyists, who merely attempt to mimic a device and add nothing to the public body of knowledge, those who invent new devices by intentionally designing around a patent nonetheless advance the public welfare and fulfill the purpose of the Patent Clause. *Warner-Jenkinson Co., Inc. v. Hilton Davis Chem. Co.*, 520 U.S. 17, 36 (1997) (contrasting "the intentional copyist making minor changes to lower the risk of legal action" with "the incremental innovator designing around the claims, yet seeking to capture as much as is permissible of the patented advance."); *see also Slimfold Mfg. Co. v. Kinkead Indus. Inc.*, 932 F.2d 1453, 1457 (Fed. Cir. 1991) (Rich, J.) ("Designing around patents is, in fact, one of the ways in which the patent system works to the advantage of the public in promoting progress in the useful arts, its constitutional purpose.").

Ultimately, whether deemed pioneering inventions or technological improvements, all innovations build upon information already known to the public. All inventors have the fortune of standing on the shoulders of the proverbial giants who preceded them. *See Sony Corp. v. Universal City Studios, Inc.*, 464 U.S. 417, 477-78 & n.28 (1984) (noting, in copyright case, that each person builds on the work of

predecessors); Suzanne Scotchmer, *Standing on the Shoulders of Giants: Cumulative Research and the Patent Law*, 5 J. ECON. PERSP. 29 (1991). As Justice Story explained well over a century ago: in literature, science, and art, there can be few things, if any, that are strictly new and original throughout. *Emerson v. Davies*, 8 F. Cas. 615, 619 (C.C.D. Mass. 1845).

While both rely to some extent on prior discoveries, pioneering inventions and technological improvements differ dramatically in their frequency. The former are relatively uncommon by their nature, which relies on unprecedented, breakthrough discoveries. It is only the rare invention that strikes out in a sufficiently uncharted direction to qualify as a "wholly novel device." Thus, progress largely takes the form of technological improvements.

Technological improvements may be derived from either pioneering inventions or prior technological improvements. When a pioneering invention leads the way into a new art, technological improvements often follow in a flurry, as inventors seek to maximize the pioneering device's utility by building and improving upon its previously unknown advances. It is this flurry of minor innovations that places technological improvements on par with their more revolutionary counterparts, though the social contribution of a technological improvement may on occasion rival that of pioneering inventions. Generally, pioneering advances provide great leaps in society's collective progress, while technological improvements provide the multitudes of incremental steps necessary to realize the full potential of major, as well as minor, discoveries.

Accordingly, both pioneering inventions and technological improvements must be encouraged, to the exclusion of neither. This bedrock principle should guide the Court in interpreting the patent system to promote the progress of the "useful Arts."

B. Patent Law Should Balance the Protective And Notice Functions And Thereby Promote Progress Through Both Pioneering Inventions And Technological Improvements.

All intellectual property law attempts to balance creators' rights to control their creations and society's right to utilize those creations. *See* Mark A. Lemley, *The Economics of Improvement in Intellectual Property Law*, 75 TEX. L. REV. 989 (1997). In the specific context of patent law, this act is carried out, and "Progress" is best promoted, by the careful balancing of the competing patent functions of dynamic protection and notice to the public. Each is fundamental, and it is only by their harmonious interplay that patent law can encourage both technological improvements and pioneering inventions.

The protective function of a patent, the constitutionally mandated right of its holder to exclude all others from practicing the invention for a limited time, is the principal feature of the patent system. *Bloomer v. McQuewan*, 55 U.S. (14 How.) 539, 549 (1852). In a capitalist market, the lure of obtaining a monopoly on a commercially profitable invention induces research, development, and, ultimately, progress in the form of new knowledge. *See Kewanee Oil Co. v. Bicron Corp.*, 416 U.S. 470, 480 (1974). The Patent Act offers this inducement by expressly prohibiting persons other than the patentee from making, using, offering to sell or selling a patented device. 35 U.S.C. § 271(a).

The notice function of a patent requires inventors to disclose a full and clear description of the invention, an enabling disclosure and the "best mode" of carrying it out so that the invention may be made and used by any person skilled in the art. 35 U.S.C. § 112; *Kewanee Oil*, 416 U.S. at 480-81. Patents thus serve to inform the public of the precise

nature of the protected subject matter, placing that knowledge in the public domain subject only to the limited intrusion of the patentee's exclusivity right. *Bonito Boats, Inc. v. Thunder Craft Boats, Inc.*, 489 U.S. 141, 150-51 (1989). Concomitantly, patents notify the public of what subject matter is not claimed in a patent. *McLain v. Ortmayer*, 141 U.S. 419, 424 (1891) ("The object of the patent law in requiring the patentee to [distinctly claim an invention] is not only to secure to him all to which he is entitled, but to apprise the public of what is still open to them."). Thus, patent disclosure enriches the public domain through a useful description of the invention, and patent claims provide subsequent inventors with a description of the subject matter that lies within and without the exclusive possession of the patent holder.

The protective and notice functions of patents exist in some tension. The scope of the patent is defined by its descriptive, written claims. *Markman v. Westview Instruments, Inc.*, 517 U.S. 370 (1996). These claims are solely within the patentee's command, but a competing inventor can avoid literal infringement by developing a new device that distinguishes the patented invention through slight modifications to its claims. Because the language of claims can never perfectly describe an invention or anticipate all the ways in which it might be modified, patents' protective function calls for claims to be read broadly. This prevents insubstantial modifications from escaping a patent's scope of exclusivity. At the same time, the notice function calls for claims to be read in a manner narrow enough to give meaningful effect to the limiting nature of the patentee's chosen language. These respective ends are achieved, or at least furthered, by two competing, judicially-created doctrines: the doctrine of equivalents and prosecution history estoppel.

First recognized by this Court in *Winans v. Denmead*, 56 U.S. 330 (1854), and expounded upon by the Court in *Graver Tank & Mfg. Co. v. Linde Air Products Co.*, 339 U.S. 605 (1950), the doctrine of equivalents holds that a product or process that does not literally infringe on a patented device may be found to infringe if the accused device is found to embody a substantial equivalent of the patented device. The concept of equivalence protects a patent's value by enlarging the patent's scope to encompass devices whose variations from the patent's literal language are insubstantial. Recently, in *Warner-Jenkinson Co. Inc. v. Hilton Davis Chemical Co.*, 520 U.S. 17 (1997), this Court reaffirmed the validity of the doctrine of equivalents, while at the same time seeking to cabin its reach within reasonable bounds by limiting the doctrine's application to elements of an invention's individual claims, rather than the invention as a whole. *Id.* at 29-30. This Court also noted that the doctrine of equivalents, when applied broadly, conflicts with patents' notice function. *Id.* at 29 ("[t]here can be no denying that the doctrine of equivalents, when applied broadly, conflicts with the definitional and public-notice functions of the statutory claiming requirement").

Prosecution history estoppel limits the doctrine of equivalents by preventing a patentee from arguing equivalents with respect to subject matter the patentee surrendered during prosecution of the patent. *Warner-Jenkinson*, 520 U.S. at 30-31; *Exhibit Supply Co. v. Ace Patents Corp.*, 315 U.S. 126, 135-37 (1942). The doctrine of prosecution history estoppel ensures that, to the extent possible, patents mean what they say. It prohibits patentees from obtaining a patent by representing to the United States Patent and Trademark Office that the patent's scope is narrow, and then arguing otherwise to a court. Prosecution history estoppel is consistent with the notice function of

patents because it allows third parties to rely on the public record of the patent prosecution. *Cf. White v. Dunbar*, 119 U.S. 47, 51 (1886) (patent claims may not be treated "like a nose of wax, which may be turned and twisted in any direction").

Application of these doctrines in a manner that elevates either the protective function or the notice function above the other directly affects the incentives, and disincentives, to innovate. Where the balance is tilted toward the protective function, patentees receive exclusivity beyond the literal language of their patents' claims, but inventors have less notice of an existing patent's scope. The resulting uncertainty discourages technological improvements because the outer margins of a patent's claims remain undefined, and the risk of infringing through a device that is found to encompass not a patent's literal claims but their substantial equivalents is not quantifiable. *See* Robert P. Merges & Richard R. Nelson, *On the Complex Economics of Patent Scope*, 90 COLUM. L. REV. 839 (1990) (warning that an overbroad doctrine of equivalents can stifle improvement); Mark A. Lemley, *The Economics of Improvement in Intellectual Property Law*, 75 TEX. L. REV. 989 (1997) (same).

Where the balance tilts too far toward the notice function, a near opposite problem occurs. A patent's scope is so well defined in connection with the literal language of its claims that the patentee lacks protection from insubstantial modifications that amount to little more than a fraud on the patent. The incentive to advance knowledge only slightly, if at all, becomes great, given the heightened certainty that modestly modified devices will not infringe. At the same time, the value of pioneering inventions, along with the incentive to produce them, is substantially diminished by would-be inventors' concerns that their rights will be

immediately diluted in the marketplace by competitors who have made, at best, insubstantial changes and, at worst, mere copies.

In sum, enforcing the doctrine of equivalents and prosecution history estoppel in a manner that balances patents' protective and notice functions is the optimal means of effectuating the constitutional command to promote the useful arts. Only through a careful balance of these functions will inventors be encouraged to innovate through both pioneering inventions and technological improvements.

C. The Absolute Bar And Flexible Bar Approaches To Prosecution History Estoppel Advanced By The Parties Fail To Balance Patents' Protective And Notice Functions And To Encourage Both Pioneer And Incremental Innovations.

Sitting en banc, and openly cognizant of its role under 28 U.S.C. § 1295(a) as the nation's exclusive court of appeal for patent matters, the Federal Circuit in *Festo Corp. v. Shoketsu Kinzoku Kogyo Kabushiki Co., Ltd.*, 234 F.3d 558 (Fed. Cir. 2000), substantially modified the law regarding the consequences attendant to the application of prosecution history estoppel. In doing so, the Federal Circuit rejected its own prior view of the estoppel's effects, thereby overruling a series of Federal Circuit cases dating back to *Hughes Aircraft Co. v. United States*, 717 F.2d 1351 (Fed. Cir. 1983).

The parties and the amici who participated at the jurisdictional stage of the instant proceeding voiced thoroughly divergent views regarding the correctness of the Federal Circuit's change in position. Those supporting the decision believe that the manner of applying prosecution history estoppel under *Hughes* and its progeny is unworkable in light of the realities of modern litigation practice. Those

supporting the prior rule believe that the manner of applying prosecution history estoppel under *Festo* is no less unworkable in light of the realities of modern invention practice. The IEEE-USA believes that both criticisms are valid, particularly inasmuch as they each address the lack of balance each rule gives patents' protection and notice functions and the concomitant disincentive each rule brings to creating both pioneering inventions and making technological improvements.

Hughes Aircraft Co. v. United States

The Federal Circuit in *Hughes* acknowledged that circuit court decisions predating the Federal Circuit's establishment took differing views on what range of equivalents, if any, would be available to a patentee where prosecution history estoppel applied. *Hughes* held that patentees who are estopped to assert infringement based on subject matter surrendered by amendment during prosecution may still claim some range of equivalents, with the available spectrum of equivalents ranging "from great to small to zero." *Hughes*, 717 F.2d at 1363.

Hughes initiated what came to be known as the "flexible bar" approach to prosecution history estoppel. Under this approach, the nature and purpose of amendments made during patent prosecution are examined, along with all accompanying circumstances, to determine the exact subject matter actually surrendered. Equivalents outside the surrendered material remain available to the patentee.

The flexible bar suffers from a fundamental lack of precision. Its foremost quality – flexibility – has made it resistant to any clear formulation that would permit predictability as to what subject matter, exactly, has been surrendered by an amendment or a series of amendments during prosecution.

Making this point in *Festo*, the Federal Circuit majority gave an example of a claim that originally recited a value of "less than twenty" and, in light of a rejection over prior art disclosing a value of fifteen, was amended to recite a value of "less than five." 234 F.2d at 577. Under the flexible bar, there is no means by which an inventor wishing to utilize values of five and a half, ten, or fourteen, or anything else between five and fifteen, could ascertain whether the patentee surrendered those potential equivalents. The precise range of equivalents encompassed by the patent, and thus not available for practice by the public, will remain uncertain until litigation somehow settles the matter. Accordingly, by virtue of its flexibility, the flexible bar defeats the notice function of patents by denying the public and would-be inventors notice of a patent's scope.

The flexible bar likewise fails to comport with constitutional and congressional patent policy by not encouraging innovation. A patent system that obfuscates the applicability of the doctrine of equivalents and, thus, whether an invention even arguably infringes a patent because of that doctrine, does not encourage innovation. Incremental innovation in the form of technological advancements is particularly discouraged, since few inventors can be expected to take an unquantifiable risk of being successfully sued for infringement. The flexible bar thus results in what this Court has previously referred to as a "zone of uncertainty which enterprise and experimentation may enter only at the risk of infringement claims . . . [and which] discourage[s] invention only a little less than unequivocal foreclosure of the field." *Markman v. Westview Instruments, Inc.*, 517 U.S. 370, 390 (1996) (quoting *Union Carbon Co. v. Binney & Smith Co.*, 317 U.S. 228, 236 (1942)), as quoted in *Festo*, 234 F.3d at 577. For these reasons and others, the Federal Circuit in *Festo* characterized the flexible bar as unworkable. *Festo*, 244 F.3d at 575-78.

Festo Corp. v. Shoketsu Kinzoku Kogyo Kabushiki Co., Ltd.

In *Festo*, a majority of the Federal Circuit's judges determined that the problems associated with the flexible bar were too inconsistent with sound patent policy for that rule to remain law. *Festo* adopted instead an "absolute bar" approach to prosecution history estoppel. Under this approach, no range of equivalents is available to a patentee with respect to any claim element to which prosecution history estoppel applies. Thus, where a limiting amendment to a claim triggers prosecution history estoppel, the patentee may pursue an infringement action only where the accused device infringes on the literal terms of that element of the patent's claims. The *Festo* majority stated that the Federal Circuit had issued a decision reaching a similar result shortly after *Hughes* was decided, *Kinzenbaw v. Deere & Co.*, 741 F.2d 383 (Fed. Cir. 1984). The decision in that case, however, made no mention of overruling *Hughes*, and the flexible bar of *Hughes* became the dominant line of Federal Circuit authority – until *Festo*.[2]

The absolute bar's purpose is to undo the chilling effect created by its predecessor. In the view of the Federal Circuit, technological advancements in the undefined zone surrounding the literal terms of a narrowed claim will no longer go undeveloped for fear of litigation, and newfound certainty regarding the scope of prosecution history estoppel will stimulate productive advances through improvements on and designs around patented technology.

---

2. Festo has been criticized for reducing the effective scope of existing patents and unfairly disrupting existing commercial relations. In his dissent below, Judge Michel suggested that a "grandfathering" provision should be made for existing patents that contain amended claim limitations and were introduced before the adoption of the absolute bar. *Festo*, 234 F.3d at 618-19 (Michel, J., concurring in part and dissenting in part).

Indisputedly, the absolute bar promotes the notice function of patents. Equally indisputable, however, is that the absolute bar also substantially compromises patents' protective function. This Court instituted and has repeatedly reaffirmed the validity of the doctrine of equivalents precisely because the doctrine is necessary to protect inventors from insubstantial modifications to patented devices that amount to little more than fraud on the patents. *See, e.g., Warner-Jenkinson Co. v. Hilton Davis Chem. Co.*, 520 U.S. 17 (1997); *Graver Tank & Mfg. Co. v. Linde Air Products Co.*, 339 U.S. 605 (1950); *Winans v. Denmead*, 56 U.S. (15 How.) 330 (1854). By denying patentees who amend their claims during prosecution the power to prevent infringement accomplished by nonsubstantive yet literal variations from the amended language, a basic protection historically afforded patentees has been jettisoned in favor of better informing the public of a patent's literal scope.

This retooling of fundamental patent law concepts tips the balance between patents' protective and notice functions too far in the latter's favor. Perhaps because of the enormous volume of patents already issued by the Patent and Trademark Office, rejections of patent applications based on prior art or some other reason are routine, as are responsive amendments to demonstrate patentability. To hold that one who amends a claim while successfully prosecuting a patent has no ability to prevent others from copying the patented invention in all respects except for a minor variation to the narrowed claim effectively eviscerates the patent's protections.

Festo thus grossly disturbs the balance between patents' protective and notice functions, and, in doing so, *Festo* likewise distorts the patent system's incentives to innovate. The absolute bar encourages copyists to replicate a patented device, making otherwise meaningless modifications to the extent necessary to

avoid the literal language of the device's amended claims. Judge Michel, in his partial dissent, declared this procedure be a blueprint for lawful copying of patented material. 234 F.3d at 616-17 (Michel, J., concurring in part and dissenting in part).

The absolute bar also threatens to eliminate the incentive to produce socially valuable pioneering inventions. Any amendment to a pioneering invention's patent claims that relates to the device's patentability will prohibit the pioneering inventor from utilizing the doctrine of equivalents. By their nature, however, pioneering inventions open new avenues of progress, and it is along such avenues that the opportunity to make insubstantial modifications from a patent's literal language is greatest. Denying pioneering inventors the benefits of the doctrine of equivalents may, in many cases, render wasted the investment expended to produce such inventions.

Finally, under the absolute bar approach, all patented devices, whether themselves pioneering inventions or technological improvements, are subject to lawful copying to the extent that after-invented technology allows a copyist to substitute a new technology for a claimed technology and thereby avoid the patent claim's literal language. As Judge Rader pointed out in his partial dissent in *Festo*, this permits a patent's protective function to be wholly defeated by the introduction of an item that functionally serves as an element of a narrowed claim but that does not come within the claim's literal language. 234 F.3d at 619-20 (Rader, J., concurring in part and dissenting in part).

In sum, both the flexible bar and the absolute bar approaches to prosecution history estoppel fail to balance patents' protective and notice functions and to encourage both pioneering inventions and technological improvements. A middle ground is needed, and, in the following section, IEEE-USA proposes just such an approach.

II. Application of Prosecution History Estoppel Strikes An Appropriate Balance Of Patent Policies Only When The Limiting Effect Of An Amendment With Respect To An Accused Device Would Have Been Foreseeable At The Time Of The Amendment.

While it is uncontroverted that subject matter surrendered during prosecution of a patent should not be resurrected by broadly construing a patent's claims through the doctrine of equivalents, *see Prodyne Enterprises, Inc. v. Julie Pomerantz*, 743 F.2d 1581, 1583 (Fed. Cir. 1984) (quoting *Hughes*, 717 F.2d at 1362), the two suggested means of determining the scope of any such surrender – the flexible bar of *Hughes* and the absolute bar of *Festo* – fail to balance adequately patents' protective and notice policies. The IEEE-USA thus recommends an alternative solution. Notwithstanding a patentability-based limiting amendment to a patent's claims during prosecution, the doctrine of equivalents should be permitted to apply unless the limiting effect of the amended language with respect to an accused device would have been foreseeable at the time of the amendment.

Applied objectively, from the perspective of a reasonable person skilled in the art, this "foreseeable bar" applies principles that are readily, if not commonly, understood by both the public and the judiciary. The foreseeable bar rule is also consistent with and may harmonize relevant precedent from the Federal Circuit and this Court. Most importantly, the foreseeable bar rule provides both broader protection to the inventor than that provided by the absolute bar and more meaningful notice to the public than that provided by the flexible bar. The foreseeable bar thus better promotes innovation through pioneering inventions and technological improvements and, thereby, best promotes progress of the useful arts.

A. The Foreseeable Bar Rule Is Consistent With Patent Policies And Harmonizes The Precedent Of This Court And The Federal Circuit.

Foreseeability is a well understood concept of modern law. Thus, courts may draw upon long-established principles for guidance in determining whether a particular limiting effect was foreseeable at the time a limitation was made. Furthermore, the use of such principles is rooted in the case law of both this Court and the Federal Circuit. Indeed, by utilizing a foreseeable bar, cases from both courts limiting application of the doctrine of equivalents may in certain key respects be harmonized.

Foreseeabilty is a traditional jurisprudential device that is commonly used by courts to circumscribe legal principles in a manner that is flexible and yet objective and reasonably determinate. Thus, foreseeability is often used to determine, as a matter of law, the existence of a common law duty of care. *E.g.*, *Palsgraf v. Long Island R.R.. Co.*, 162 N.E. 99 (N.Y. 1928) (Cardozo, J.); *see, e.g.*, Peter F. Lake, *Common Law Duty in Negligence Law*, 34 San Diego L. Rev. 1053 (1997) (contrasting elements of modern no-duty rules among the states).

Likewise, foreseeability is commonly used as a measure to limit the scope of damages in civil contract actions. *Hadley v. Baxendale*, 156 Eng. Rep. 145 (1854) (consequential damages in contract). In patent cases, too, the Federal Circuit has utilized foreseeability as a means to measure damages. *Rite-Hite Corp. v. Kelley Co., Inc.*, 56 F.3d 1538 (Fed. Cir. 1995) (en banc).

In the estoppel context, the contract doctrine of promissory estoppel requires proof that a promisor should reasonably have foreseen that his promise would induce

reliance by the person to whom the promise was made. RESTATEMENT (SECOND) OF CONTRACTS § 90 (1981). Similarly, this Court has specifically applied foreseeability to measure whether a defendant's offensive use of collateral estoppel is fair. *Parkland Hosiery Co. v. Shore*, 439 U.S. 322, 330 (1979) ("If a defendant in the first action is sued for small or nominal damages, he may have little incentive to defend vigorously, particularly if future suits are not foreseeable.").

More specific to the issues in this case, foreseeability has played a recognized role in effectuating patents' protective and notice functions. For instance, in *Kinzenbaw v. Deere & Co.*, 741 F.2d 383 (Fed. Cir. 1984), the Federal Circuit relied on its prior decision in *Hughes* and this Court's decision in *Graver Tank* to conclude that "the doctrine of equivalents is designed to protect inventors from unscrupulous copyists and *unanticipated equivalents*." *Id.* at 389 (emphasis supplied). Thus, the Federal Circuit held, a patent applicant is not required to predict "all future developments which enable the practice of his invention in substantially the same way." *Id.* (quoting *Hughes*, 717 F.2d at 1362). Turning to the facts before the court, *Kinzenbaw* found that the claimed variation was neither copied nor unanticipated, and the court held that prosecution history estoppel barred the patentee from relying on the doctrine of equivalents.

Kinzenbaw plainly suggested that, if the particular limiting effect created by the patentee's amendments to the patent's claim language had been unforeseeable, the doctrine of equivalents would still have been available to the patentee. Accordingly, *Kinzenbaw* relied squarely on foreseeability principles.

Foreseeability is also recognized in the Federal Circuit's decision in *Sage Products v. Devon Industries*, 126 F.3d 1420, 1425 (Fed. Cir. 1997). There, following this Court's command that "[t]he limits of a patent must be known," *Markman v. Westview Instruments, Inc.*, 517 U.S. 370, 390 (1996), the Federal Circuit held that, "as between the patentee who had a clear opportunity to negotiate broader claims but did not do so, and the public at large, it is the patentee who must bear the cost of its failure to seek protection for [a] *foreseeable alteration* of its claimed structure." 126 F.3d at 1425 (emphasis supplied).

Sage Products specifically held that a patentee may not utilize the doctrine of equivalents to reach a foreseeable modification to a claimed innovation. The court observed that allowing the doctrine of equivalents to encompass foreseeable variations to claims would create a "zone of uncertainty into which competitors tread only at their peril." *Id.* at 1425.

Thereafter, in *Festo*, the Federal Circuit relied extensively on the need for forseeability with respect to the scope of equivalents available to a patent's claims when the court held that limiting amendments based on patentability cannot be expanded beyond their literal language through the doctrine of equivalents. The *en banc* court emphasized that the flexible bar of *Hughes* made it "virtually impossible" to "predict[] with any degree of certainty the scope of surrender that will be found when prosecution history estoppel applies." 234 F.3d at 574-75.

Festo shows that foreseeability marks the conceptual juxtaposition of patents' protective and notice functions. Satisfactory notice to the public of a patent's scope is achieved where the public may foresee the limits of the protection that will be afforded a patent through application

of the doctrine of equivalents. Foreseeability is thus wholly consistent with, and, in fact, an essential component of, the basic functions of protection and notice that underlie the patent system. Viewed through the lens of foreseeability, the Federal Circuit's decisions in *Hughes*, *Kinzenbaw*, *Sage Products*, and *Festo* may be harmonized with respect to a balancing of the protection function and the notice function.

Not only is a focus on foreseeability to determine a limiting amendment's effect consistent with the Federal Circuit's case law, it is not inconsistent with this Court's prosecution history estoppel decision in *Exhibit Supply Co. v. Ace Patents Corp.*, 315 U.S. 126 (1942). In *Exhibit Supply*, the Court held that a patentee who selected limiting language to amend a claim while prosecuting the patent had thereby "recognized and emphasized the difference" between the original claim and an amended claim "and proclaimed his abandonment of all that is embraced in that difference." *Id.* at 136-37. The Court made no suggestion that the patentee's abandonment extended to equivalents that could not reasonably be foreseen. To the contrary, the Court's language suggested that the patentee specifically abandoned equivalents that should reasonably have been recognized when the patentee made the limiting amendment.

In sum, foreseeability is a well established concept in modern law that is consistent with, if not an essential component of, the basic patent functions of protection and notice. The concept is also well rooted in connection with limitations on the doctrine of equivalents, as the Federal Circuit expressly utilized foreseeability for this purpose in *Kinzenbaw* and *Sage Products*, and the decisions in *Hughes*, *Festo*, and *Exhibit Supply* may reasonably be viewed as efforts to limit the doctrine of equivalents in accordance with foreseeability. Accordingly, the use of foreseeability to limit application of the doctrine of equivalents is supported by existing case law.

B. The Foreseeable Bar Rule Overcomes the Failings Of The Absolute Bar And The Flexible Bar.

The foreseeable bar advanced by the IEEE-USA holds that, notwithstanding a patentability-related amendment to a patent's claims during prosecution, the doctrine of equivalents will be applied unless the limiting effect of the amended language with respect to an accused device would have been foreseeable at the time of the amendment to a reasonable person skilled in the art. The foreseeable bar avoids each "parade of horribles" posited by respective opponents of the flexible bar and the absolute bar, while simultaneously effectuating and balancing the patent policies advanced by their respective advocates. Thus, the foreseeable bar is not only fair, it overcomes the considerable failings of both the flexible and the absolute bars and best satisfies the fundamental constitutional policy of promoting the useful arts.

To begin, application of the foreseeable bar is eminently fair. Where the limiting effect of an amendment's language with respect to an accused device should have been foreseen by a person reasonably skilled in the art, the patentee should not be permitted to ignore that effect by utilizing the doctrine of equivalents to expand a patent's claims to encompass subject matter that, by all reasonable appearances, was abandoned during the patent's prosecution. Instead, the patentee should be estopped to assert equivalence.

On the other hand, where the limiting effect of an amendment's language with respect to an accused device could not have been objectively foreseen at the time of the amendment – perhaps because the significance of the limitation was obfuscated by the "subtlety of language or complexity of the technology, [or a] subsequent change in the state of the art, such as later-developed technology,"

Sage Products, 126 F.3d at 1425 – refusing to apply the doctrine of equivalents unfairly deprives the patentee of protection that this Court has repeatedly deemed essential to a meaningful right of exclusivity under the patent system. To impose a consequence on a patentee based ostensibly on the intent underlying the patentee's actions, but where those actions do not reasonably support any such intent, is the antithesis of fairness.

In this way, the foreseeable bar overcomes the substantial failings of the absolute bar. As shown in Part I-C, *supra*, the absolute bar is unworkable and constitutionally ineffective because it permits competitors to utilize subject matter that effectively works a fraud on a patent. Under the absolute bar, only trivial innovations, if not pure copies, are encouraged, while the creation of pioneering innovations is directly discouraged. Under the foreseeable bar, these harsh consequences are largely avoided.

The foreseeable bar prohibits use of the doctrine of equivalents only where the objective inference to be drawn from the patentee's choice of language shows that the equivalent subject matter in the infringing device was in fact abandoned during the patent's prosecution, thus opening the door to competitors' lawful use of that subject matter. Invention of pioneering innovations is not discouraged, and trivial innovations are not disproportionately encouraged, because the foreseeable bar permits the doctrine of equivalents to remain available to patentees even if, as is often the case, a patent's claims are amended for reasons related to patentability.

Significantly, the foreseeable bar rule also permits ready and fair resolution to the problem of after-arising technology. In *Festo*, Judge Rader specifically criticized the absolute bar by noting that it permits competitors to "have unfettered

license to appropriate all patented technology [that uses] outdated terms" in the face of subsequently developed technology. *Festo*, 234 F.3d at 619 (Rader, J., concurring in part and dissenting in part) (noting that the terms "cathode" and "anode" for vacuum-tube instruments gave way to literally distinguishable "collectors" and "emitters" after the invention of the transistor). The foreseeable bar permits patent protection when insubstantial changes are made using after-invented technology that could not have been foreseen at the time of an amendment.

Further, the foreseeable bar permits patent protection where subtleties of language or inherent complexity of a technology is exploited to avoid the literal language of a patent's claims by substitution of a substantial equivalent. In those cases as well, the foreseeable effect of the limiting language governs.

In his partial dissent in *Festo*, Judge Michel raised concerns that the absolute bar provided a blueprint for lawful copying of patented material. 234 F.3d at 616-17 (Michel, J., concurring in part and dissenting in part). The foreseeable bar addresses this concern to the extent that the limiting effect of an amendment with respect to an accused device was not foreseeable. Where foreseeability is found, the patentee is deemed to have intended to abandon that particular equivalent, and thus neither patent law nor fundamental fairness is offended by the competitor's use of the equivalent subject matter or by the application of prosecution history estoppel to the patentee.

Importantly, the foreseeable bar avoids not only the failings of the absolute bar but the failings of the flexible bar. As also discussed in Part I-C, *supra*, the flexible bar is unworkable and constitutionally ineffective because the public cannot reasonably predict the outcome of its

application in a particular case and, as a result, incremental innovations in the form of technological improvements are improvidently discouraged. The foreseeable bar eliminates these concerns by eliminating the flexible bar's unbounded and variable inquiry and replacing it with a straightforward and measurably more predictable foreseeability test.

To return to the example used by the majority in *Festo*, where a claim for "less than twenty" is amended to "less than five" in view of prior art disclosing a value of fifteen, the reasonable person skilled in this particular art would foresee that equivalents using a value over five were abandoned by the language of the limiting amendment, absent some extraordinary circumstance. This would permit a district court to determine, and a reviewing court to confirm, that, as a matter of law, prosecution history estoppel barred the patentee's infringement claim against an alleged infringer who utilized a value of five and a half, based on an objective view of the meaning and effect of the amended language itself.

By comparison, as the *Festo* majority complained, the flexible bar calls for a pliable examination of a series of extraneous factors. Consequently, an inventor wishing to improve a device through a meaningful technological innovation that was arguably an equivalent to the amendment's literal language could not predict in advance whether, under that test, a court would apply prosecution history estoppel to the patentee or permit a jury trial on equivalence. Lawful innovations may never reach fruition merely because the uncertainty of the existing patent's scope presents too great a litigation risk. This result is inconsistent with promoting progress, and it is unnecessary in light of the more predictable alternative of the foreseeable bar.

In particular, while the foreseeable bar is not a bright line rule like the absolute bar, it provides a concise test that is both flexible and readily comprehensible to both the public and to the district court judges who must apply it. Under the flexible bar of *Hughes*, a judge must not only consider a claim construction, but the panoply of issues relating to a study of prosecution history, validity in view of the prior art cited and of record and the totality of the circumstances under which the application was amended to determine the entire scope of equivalents remaining after the amendment. The judge must then formulate that scope of equivalents and then either apply it to the accused device or relate it to a jury through an instruction that, like the claims themselves, may be constrained by the limitations of language in conveying the inventive idea. On appeal, the reviewing court must revisit all of the factors considered below and may well view their totality in a way different from the trial judge's view, which ensures that in each case the ultimate resolution of the estoppel question will remain uncertain until the appeal is concluded.

In contrast, a foreseeable bar asks the trial judge only whether the limiting effect of an amendment's language as applied to exclude an accused device from literal infringement was foreseeable at the time of the amendment. Foreseeability, in general, is a consummate common law principle with which judges are intimately familiar. Unlike the flexible bar, the foreseeable bar is more focused, limiting the inquiry as a matter of law to a particular limiting effect of particular claim language with respect to a particular accused device. The bases for the trial judge's conclusion can be readily articulated in an opinion, which in turn can be readily reviewed as a matter of law by an appellate court.

Ultimately, the foreseeable bar is more equitable than the absolute bar and more certain than the flexible bar. As a matter of constitutional policy, then, the foreseeable bar presents the best means of promoting progress of the useful arts and should be adopted by this Court as the relevant inquiry in determining when a patentee is estopped to rely on the doctrine of equivalents.

It remains only to note that, if adopted by this Court, the foreseeable bar would be amenable to case-by-case development by the lower courts to ensure equity and compliance with the constitutional purposes of the patent system. In sharp contrast, the bright-line rule of *Festo* all but forecloses the opportunity for further refinement where its results prove unjust, and, despite twenty years of case-by-case development, the flexible bar has remained sufficiently unmoored to firm principles that it has never overcome its unpredictable and inequitable nature. Thus, unlike the absolute and flexible bars, a foreseeable bar would facilitate the capacity of courts below to best "implement procedural improvements to promote certainty, consistency, and reviewability to this area of the law." *Warner-Jenkinson*, 520 U.S. at 39 n.8.

CONCLUSION

The Patent Act should be interpreted to promote the purposes set forth in the Patent Clause and the policies established thereunder by Congress. With respect to prosecution history estoppel, both the absolute bar and the flexible bar rules fail to balance those concerns adequately, with each being marred by its own substantial shortcomings.

Unlike the absolute and flexible bars, the foreseeable bar described in this brief is easily grasped and applied, assures both fundamental fairness and predictability, and is consistent with patent law policies and case law of this Court and the Federal Circuit. Accordingly, the IEEE-USA respectfully submits that progress is best promoted, and the patent functions of protection and notice are best balanced to encourage all forms of invention, by enforcing prosecution history estoppel through the foreseeable bar.

Respectfully submitted,

ANDREW C. GREENBERG
Counsel of Record
MATTHEW J. CONIGLIARO
C. DOUGLAS MCDONALD
CARLTON FIELDS, P.A.
777 S. Harbour Island Blvd.
Tampa, Florida 33602
(813) 821-7000

Attorneys for Amicus Curiae Institute of Electrical and Electronics Engineers – United States of America (IEEE-USA)

AUG 31 2001

30

Supreme Court, U.S.
FILED
AUG 31 2001
OFFICE OF THE CLERK

No. 00-1543

In The

Supreme Court of the United States

FESTO CORPORATION,

Petitioner,

v.

SHOKETSU KINZOKU KOGYO KABUSHIKI CO., LTD., A/K/A SMC CORPORATION and SMC PNEUMATICS, INC.,

Respondents.

On Writ Of Certiorari To The United States Court Of Appeal For The Federal Circuit

BRIEF OF AMICUS CURIAE CELLTECH GROUP PLC. IN SUPPORT OF PETITIONER

DONALD S. CHISUM
Counsel of Record
RACHEL KREVANS
GEORGE C. YU
DIANA M. SASO
MORRISON & FOERSTER LLP
755 Page Mill Road
Palo Alto, California 94304-1018
(650) 813-5600

Counsel for Amicus Curiae Celltech Group plc.

August 31, 2001

COCKLE LAW BRIEF PRINTING CO., (800) 225-6964
OR CALL COLLECT (402) 342-2831

12 pp

TABLE OF CONTENTS

Page

STATEMENT OF INTEREST 1

SUMMARY OF ARGUMENT..... 2

ARGUMENT 4

I. THE *FESTO* DECISION LEAVES CELLTECH A "POWERLESS LICENSOR"..... 4

A. The Complete Bar Rule of *Festo* Has Especially Severe Consequences to Biotechnology Patentees..... 4

B. *Festo* Allows Celltech's Licensee to Pirate Celltech's Invention with Impunity..... 5

II. THE *FESTO* DECISION SHOULD NOT BE APPLIED RETROACTIVELY 8

CONCLUSION 9

TABLE OF AUTHORITIES

Page

CASES

Amgen, Inc. v. Hoechst Marion Roussel, 126 F.Supp. 2d 69 (D. Mass. 2001) 5

Bio-Technology Gen. Corp. v. Genentech, Inc., 80 F.3d 1553 (Fed. Cir. 1996)..... 4

Festo Corp. v. Shoketsu Kinzoku Kogyo Kabushiki Co., Ltd., 234 F.3d 558 (Fed. Cir. 2000)..... *passim*

Warner-Jenkinson Co., Inc. v. Hilton Davis Chem. Co., 520 U.S. 17 (1997) 8

STATEMENT OF INTEREST

Celltech Group plc. ("Celltech") is one of the largest biopharmaceutical companies in Europe.[1] Celltech focuses on drug discovery and development, novel gene target identification and therapeutic antibody technologies. Celltech has several patented technologies including patents relating to antibody engineering and antibody production. By licensing its patents, Celltech generates a royalty stream to fund its further research and development.

Celltech is currently in a dispute before an English court concerning the question of whether a product made by a licensee falls within the scope of one of Celltech's important United States patents relating to humanized antibodies. In that dispute, the licensee has alleged that, *inter alia*, because of the decision of the Court of Appeals for the Federal Circuit in *Festo*, it is not obliged to pay royalties on a virtually identical humanized antibody. That case therefore emphasized that the fears expressed by Judge Michel in his opinion are well founded. Celltech made an important invention, but, as is virtually inevitable in the case of biotechnology patents, amended the originally-filed claims during the course of prosecution in

---

[1] Written consent to the filing of this brief has been obtained from the parties and is lodged herewith. Celltech Chiroscience Ltd., the entity listed in the letters of consent, is a subsidiary of Celltech Group plc. Counsel for a party did not author this brief in whole or in part. No person or entity other than the *amicus curiae*, its members, or its counsel made a monetary contribution to the preparation and submission of this brief.

certain respects. Celltech's licensee is using those amendments to escape the payment of royalties in a manner that illustrates the special difficulties to which the majority decision in *Festo* will give rise in the context of biotechnology cases, should this Court uphold the decision.

SUMMARY OF ARGUMENT

In his concurring in part and dissenting in part opinion in *Festo Corp. v. Shoketsu Kinzoku Kogyo Kabushiki Co., Ltd.*, 234 F.3d 558, 617 (Fed. Cir. 2000) (*en banc*), Judge Michel identified the biotechnology field, in particular, as being one which was likely to be harmed by the majority's new complete bar rule. He noted that "[c]ompletely barring resort to the doctrine of equivalents for amended claim limitations may drastically limit the scope of protection for biotechnology patents, such as those claiming a protein molecule." *Id.* Celltech submits this *amicus curiae* brief to provide the Court with a "real world" example of how a licensee who entered into a pre-*Festo* license can use *Festo*'s complete bar to avoid paying very substantial royalties.

The complete bar rule provides copyists with a fail-safe method to avoid liability for infringement. *Id.* at 616. First, copyists can read the prosecution history to identify amendments made for patentability reasons. Second, copyists can then copy all unamended limitations exactly, but substitute any known interchangeable structure, matter or step for any limitation that has been amended. Regardless of how unimportant or insubstantial, a change

to just one amended limitation will be sufficient for the copyist to avoid liability under the complete bar rule.

Biotechnology patents with limitations that have been amended during prosecution, especially those claiming a protein or nucleic acid molecule, will be particularly susceptible to attack by copyists. Slight modifications to biotechnology inventions, such as a change of one amino acid or nucleotide, are routine and often have no substantive impact on the molecule, but can defeat literal infringement. If limitations in the patent's claims have been amended during prosecution for a reason related to patentability, the patentee will be completely barred from protecting their innovations against a determined copyist. A competitor seeking to make, use, or sell a patented protein, or a similar biotechnology invention, where the underlying patent contains an amended claim limitation will only have to make a known interchangeable amino acid substitution at one position in a protein to avoid infringement, literal or otherwise.

The complete bar rule directly impacts untold numbers of licensing agreements that are predicated on the assumption that patent claims with an amended limitation are still entitled to a range of equivalents. *Festo*, 234 F.3d at 619 (Michel, J., dissenting in part). Licensees and others will be tempted to exploit the complete bar rule by using the two-step method for liability-free copying discussed above. *Id.* By making a routine substitution of a known interchangeable element in an amended claim limitation, but exactly copying every other limitation in the patent, a licensee can then correctly assert that it is no longer practicing the patented invention under the

license and refuse to pay royalties. *Id.* Under the complete bar rule, the licensor would be powerless to enforce the license because the patent claims do not literally cover the routinely-modified product, and the patentee/licensor would be barred from asserting infringement under the doctrine of equivalents.

As a victim of such a would-be copyist and exploiting licensee, Celltech provides the Court with a "real-world" example of the severe impact the complete bar rule could inflict on patentees and licensors.

ARGUMENT

I. THE *FESTO* DECISION LEAVES CELLTECH A "POWERLESS LICENSOR"

A. The Complete Bar Rule of *Festo* Has Especially Severe Consequences to Biotechnology Patentees

The *Festo* decision was made in the context of considering a mechanical invention. Biotechnology inventions have special features. Biotechnology is founded on genetic sequences embodied in nucleic acids and proteins. It is a field in which it is particularly difficult to write claims that strike the right balance between specificity and sufficient comprehensiveness to catch copyists.

This is principally because, once an inventor has discovered a relevant genetic sequence, it is known that small modifications can usually be made to that sequence without significantly affecting its function. *See, e.g., Bio-Technology Gen. Corp. v. Genentech, Inc.*, 80 F.3d 1553, 1556

(Fed. Cir. 1996) (accused infringer copied the patented human growth hormone protein but deleted one amino acid); *Amgen, Inc. v. Hoechst Marion Roussel*, 126 F.Supp. 2d 69, 132-133 (D. Mass. 2001) (accused infringer copied the patented erythropoietin protein but deleted one amino acid). Biotechnology inventions and the claims relating to them can be thought of as maps giving the "co-ordinates" of a portion of the genetic terrain where a particular beneficial characteristic can be found. There will almost always be a periphery of terrain around the given co-ordinates where those characteristics are also to be found.

Amendments to such patents during prosecution are very common – if not virtually universal – as are statements describing the prior art and how it differs from the claimed invention. *See Festo*, 234 F.3d at 638 (Newman, J., dissenting in part) (stating that very few patents issue with claims as originally filed). If, as soon as the patentee differentiates its "co-ordinates" from those of the remote co-ordinates of prior art, there is a risk of an automatic and complete estoppel, it will effectively be impossible to give fair protection to the patentee.

B. *Festo* Allows Celltech's Licensee to Pirate Celltech's Invention with Impunity

Celltech owns U.S. Patent No. 5,859,205, relating to "humanized" antibodies. Antibodies are protein molecules, made from chains of amino acids that have the ability to bind to a wide variety of biologically relevant molecules, including proteins found in specific bacteria,

viruses, and tumor cells. Antibodies are frequently generated from a non-human source such as a mouse. When non-human antibodies are administered to patients, the patient's immune system normally recognizes the antibody as foreign, which can impede the antibody's effectiveness and produce undesirable side effects. Antibody humanization seeks to minimize or avoid such responses by creating antibodies that are more "human" by replacing non-essential parts of the mouse-derived protein with the equivalent human-derived protein sequence. The humanized antibody retains its ability to bind to a specific protein, but is less likely to be rejected by the patient's immune system.

Celltech licensed its patented technology relating to humanized antibodies to a U.S. biopharmaceutical company, MedImmune, Inc. ("MedImmune"). The license provided that MedImmune was to pay royalties if the manufacture or sale of its products fell within the scope of Celltech's U.S. or foreign patents. After entering into the licensing agreement, MedImmune began marketing a humanized antibody product that was virtually identical to Celltech's patented technology.

The only difference between the licensee's product and Celltech's technology is that one amino acid at one location in the antibody protein sequence is different. The whole antibody consists of two paired sequences consisting of approximately 1,320 amino acids. The substituted amino acid in the licensee's product is threonine, which is a known interchangeable substitute for the amino acid in Celltech's technology, serine. The use of serine or threonine at this location in the antibody protein sequence has

no significant impact on the antibody's ability to bind with the biological molecule of interest.

Because Celltech's licensee contends that its product is not covered by Celltech's U.S. Patent and therefore no royalties are due, Celltech filed suit against its licensee in the Patents Court of the Chancery Division of the High Court of Justice for England and Wales in October 2000. The action alleged that the licensee's product fell within the scope of the claims of the U.S. patent. The Federal Circuit issued its *Festo* decision shortly thereafter, and Celltech's licensee, in its defense, asserted that prosecution history estoppel provided it with a complete defense to Celltech's action, basing its argument, *inter alia*, on the *Festo* decision.

Due to the single, although recognizably interchangeable, amino acid substitution between Celltech's technology and its licensee's product, Celltech cannot assert literal infringement. It must therefore rely on the doctrine of equivalents to establish infringement, and in turn the basis for the obligation to pay royalties. However, as is almost invariable in the course of prosecuting biotechnology patents, Celltech amended its claims during prosecution of its U.S. patent. Its licensee has argued that the amendments were made for patentability purposes and, therefore, completely bar Celltech from asserting any scope of equivalents under the majority's decision in *Festo*. The U.K. Patents Court Judge recently stayed the English action until this Court rules on its review of the *Festo* decision.

For the reasons explained above, Celltech agrees with the Petitioner that the Federal Circuit's new complete bar

rule runs contrary to the realities of established patent prosecution practice and will unfairly impact the biotechnology industry.

II. THE *FESTO* DECISION SHOULD NOT BE APPLIED RETROACTIVELY

Celltech submits that even if the Court confirms the majority decision of the Federal Circuit in *Festo*, it should not do so in a way that affects vested rights. Even the *Festo* majority recognized that its decision represented a change in the law. *Festo*, 234 F.3d at 571. The unfairness of this type of change was noted by a member of this Court, who commented that a change in the law of prosecution history estoppel would "unfairly discount the expectations of a patentee who had no notice at the time of patent prosecution that such [a rule] would apply." *Warner-Jenkinson Co., Inc. v. Hilton Davis Chem. Co.*, 520 U.S. 17, 41 (1997) (Ginsburg, J., concurring).

Celltech's situation will be a common occurrence if *Festo* stands as written. After *Festo*, licensees will have a strong economic incentive to use the "*Festo* roadmap" to avoid paying royalties. Licensees, which benefit from the technological innovations of their licensors, are well-placed to determine what insubstantial changes can be made to patented inventions – especially when it comes to biotechnology inventions – without affecting the resulting product. Thus, if *Festo* is applied retroactively, many licensors will be deprived of their expected

royalties without any notice that the patent they prosecuted or the license they negotiated would be valueless.

CONCLUSION

The complete bar rule announced in *Festo* has provided would-be copyists, including existing licensees, with potential means to avoid infringement and the payment of royalties. Rather than furthering the public policy of fostering innovation, the majority's decision in *Festo* has had the pernicious effect of encouraging imitation and stifling the advancement of important and significant technologies. This Court should reverse the majority opinion below or limit its application to patents that issue from applications filed after the issuance of the opinion below.

Respectfully submitted,

DONALD S. CHISUM
Counsel of Record
RACHEL KREVANS
GEORGE C. YU
DIANA M. SASO
MORRISON & FOERSTER LLP
755 Page Mill Road
Palo Alto, California 94304
(650) 813-5600

AUG 31 2001

(31)

No. 00-1543

Supreme Court, U.S.
FILED
AUG 31 2001
OFFICE OF THE CLERK

IN THE

Supreme Court of the United States

FESTO CORPORATION,

Petitioner,

v.

SHOKETSU KINZOKU KOGYO KABUSHIKI CO., LTD., A/K/A SMC CORPORATION AND SMC PNEUMATICS, INC.,

Respondents.

On Writ of Certiorari to the United States Court of Appeals for the Federal Circuit

BRIEF FOR LITTON SYSTEMS, INCORPORATED AS AMICUS CURIAE IN SUPPORT OF PETITIONER

FREDERICK A. LORIG
SIDFORD L. BROWN
BRIGHT & LORIG
633 West 5th Street
Los Angeles, CA 90071
(213) 627-7774

JOHN G. ROBERTS, JR.*
CATHERINE E. STETSON
HOGAN & HARTSON L.L.P.
555 Thirteenth Street, N.W.
Washington, D.C. 20004
(202) 637-5810

* Counsel of Record

Counsel for Amicus Curiae

(additional counsel on inside cover)

34 pp

Additional counsel for amicus curiae:

RORY J. RADDING
PENNIE & EDMONDS L.L.P.
1155 Avenue of the Americas
New York, NY 10036
(212) 790-9090

STANTON T. LAWRENCE, III
CARL P. BRETSCHER
PENNIE & EDMONDS L.L.P.
1667 K Street, N.W.
Washington, D.C. 20006
(202) 496-4400

TABLE OF CONTENTS

	Page
TABLE OF AUTHORITIES	ii
STATEMENT OF INTEREST OF AMICUS CURIAE	1
SUMMARY OF ARGUMENT	7
ARGUMENT	9
I. THE DECISION BELOW RAISES GRAVE CONSTITUTIONAL CONCERNS UNDER THE TAKINGS CLAUSE	9
II. THE DECISION BELOW, IF AFFIRMED, SHOULD APPLY PROSPECTIVELY ONLY	18
CONCLUSION	26

TABLE OF AUTHORITIES

Page

CASES:

American Trucking Ass'ns, Inc. v. *Scheiner*, 483 U.S. 266 (1987) 21

American Trucking Ass'ns, Inc. v. *Smith*, 496 U.S. 167 (1990) 21, 23, 24

Bloomer v. *McQuewan*, 55 U.S. (14 How.) 539 (1852) 10

Bonelli Cattle Co. v. *Arizona*, 414 U.S. 313 (1973) 14

Bonito Boats, Inc. v. *Thunder Craft Boats, Inc.*, 489 U.S. 141 (1989) 10

Cherry v. *Steiner*, 716 F.2d 687 (9th Cir. 1983), *cert. denied*, 466 U.S. 931 (1984) 14

Chevron Oil Co. v. *Huson*, 404 U.S. 97 (1971) ..... *passim*

Cipriano v. *City of Houma*, 395 U.S. 701 (1969) 23

Control Res., Inc. v. *Delta Elecs., Inc.*, 133 F. Supp. 2d 121 (D. Mass. 2001) 17

Festo Corp. v. *Shoketsu Kinzoku Kogyo Kabushiki Co.*, 234 F.3d 558 (Fed. Cir. 2000) ..... *passim*

First English Evangelical Lutheran Church v. *County of Los Angeles*, 482 U.S. 304 (1987) 14

Graver Tank & Mfg. Co. v. *Linde Air Prods. Co.*, 339 U.S. 605 (1950) 7, 11, 12

TABLE OF AUTHORITIES—Continued

Page

CASES:

Harper v. *Virginia Dep't of Taxation*, 509 U.S. 86 (1993) 21

Hartford-Empire Co. v. *United States*, 323 U.S. 386 (1945) 9-10

Hollister v. *Benedict & Burnham Mfg. Co.*, 113 U.S. 59 (1885) 10

Hughes Aircraft Co. v. *United States*, 717 F.2d 1351 (Fed. Cir. 1983) 11

Hughes v. *Washington*, 389 U.S. 290 (1967) 13, 14, 15

James B. Beam Distilling Co. v. *Georgia*, 501 U.S. 529 (1991) 21

Kaiser Aetna v. *United States*, 444 U.S. 164 (1979) 10

Kamen v. *Kemper Fin. Servs., Inc.*, 500 U.S. 90 (1991) 6

Landgraf v. *USI Film Prods.*, 511 U.S. 244 (1994) 24

Lebron v. *National R.R. Passenger Corp.*, 513 U.S. 374 (1995) 7

Litton Sys., Inc. v. *Honeywell, Inc.*, 238 F.3d 1376 (Fed. Cir. 2001) 2, 5

Litton Sys., Inc. v. *Honeywell, Inc.*, 140 F.3d 1449 (Fed. Cir. 1998) 3

Litton Sys., Inc. v. *Honeywell, Inc.*, 87 F.3d 1559 (Fed. Cir. 1996) 3, 6, 16

TABLE OF AUTHORITIES—Continued

Page

CASES:

Litton Sys., Inc. v. *Honeywell, Inc.*, 1995 WL 366468 (C.D. Cal. 1995) 6

Lucas v. *South Carolina Coastal Council*, 505 U.S. 1003 (1992) 14

Marbury v. *Madison*, 5 U.S. (1 Cranch) 137 (1803) 17

Muhlker v. *New York & Harlem R.R.*, 197 U.S. 544 (1905) 14

Oregon v. *Corvallis Sand & Gravel Co.*, 429 U.S. 363 (1977) 14

Patterson v. *Colorado*, 205 U.S. 454 (1907) 13

Penn Central Transp. Co. v. *New York City*, 438 U.S. 104 (1978) 12

Photo Elecs. Corp. v. *England*, 581 F.2d 772 (9th Cir. 1978) 10

PruneYard Shopping Center v. *Robins*, 447 U.S. 74 (1980) 16

Reynoldsville Casket Co. v. *Hyde*, 514 U.S. 749 (1995) 21

Richmond Screw Anchor Co. v. *United States*, 275 U.S. 331 (1928) 12

Rogers v. *Tennessee*, 121 S. Ct. 1693 (2001) 16, 24

TABLE OF AUTHORITIES—Continued

Page

CASES:

Sotomura v. *County of Hawaii*, 460 F. Supp. 473 (D. Haw. 1978) 15

Stevens v. *City of Cannon Beach*, 510 U.S. 1207 (1994) 14

Transparent Wrap Mach. Corp. v. *Stokes & Smith Co.*, 329 U.S. 637 (1947) 10

Ultimate Sportsbar, Inc. v. *United States*, 48 Fed. Cl. 540 (Fed. Cl. 2001) 14

Union Paper-Bag Mach. Co. v. *Murphy*, 97 U.S. 120 (1877) 10

United States v. *Williams*, 504 U.S. 36 (1992) 7

Warner-Jenkinson Co. v. *Hilton Davis Chem. Co.*, 520 U.S. 17 (1997) ..... *passim*

Webb's Fabulous Pharmacies, Inc. v. *Beckwith*, 449 U.S. 155 (1980) 12

William Cramp & Sons Ship & Engine Bldg. Co. v. *International Curtis Marine Turbine Co.*, 246 U.S. 28 (1918) 10

Winans v. *Denmead*, 56 U.S. (15 How.) 330 (1854) 7, 23

CONSTITUTION:

U.S. Const., amend. V ..... *passim*

TABLE OF AUTHORITIES—Continued

Page

STATUTES:

35 U.S.C. § 112 ..... 2, 5

35 U.S.C. § 154(a)(1) 10

35 U.S.C. § 261 10

35 U.S.C. § 271(a) 10

RULE:

S. Ct. Rule 37.6 1

OTHER AUTHORITIES:

Barton H. Thompson, Jr., *Judicial Takings*, 76 Va. L. Rev. 1449 (1990) 13, 16, 18

Kevin A. Wolff, *et al.*, *The Unspoken Loss In Shareholder Value: Patent Rights Take A Hit*, Vol. 8, No. 21 Mealey's Litigation Reports: Patents (Apr. 2, 2001) 16

IN THE

Supreme Court of the United States

No. 00-1543

FESTO CORPORATION,

Petitioner,

v.

SHOKETSU KINZOKU KOGYO KABUSHIKI CO., LTD., A/K/A SMC CORPORATION AND SMC PNEUMATICS, INC.,

Respondents.

On Writ of Certiorari to the United States Court of Appeals for the Federal Circuit

BRIEF FOR LITTON SYSTEMS, INCORPORATED AS AMICUS CURIAE IN SUPPORT OF PETITIONER

STATEMENT OF INTEREST OF AMICUS CURIAE

Litton Systems, Incorporated ("Litton") is a high-technology corporation holding a diverse portfolio of patents and other intellectual property rights.[1] Among the industrial

[1] Pursuant to this Court's Rule 37.6, we note that no part of this brief was authored by counsel for any party, and no person or entity other than the amicus curiae filing this brief made a monetary contribution to the preparation or submission of the brief. The brief is filed with the consent of the parties, and copies of the consent letters have been filed with the Clerk.

products Litton manufactures are navigation systems for commercial aircraft. In 1978, Litton inventors developed a pioneering method for producing near-perfectly reflective mirrors for use in ring laser gyroscopes ("RLGs"), instruments used to calculate an aircraft's position and attitude.[2] Litton sought and was granted a patent on its new method in 1979. In 1985, Litton applied to reissue its patent. After the Patent and Trademark Office ("PTO") rejected Litton's application on Section 112 grounds,[3] Litton amended its claims to answer the Section 112 rejection. Its reissue patent issued in 1989.

In 1990, Litton sued its sole competitor, Honeywell, after Honeywell began to manufacture RLG mirrors by unlawfully copying Litton's patent and proprietary information. Litton had previously commanded a substantial portion of global market share, but after Honeywell began copying Litton's mirror-making process, Honeywell cornered a large portion of the market, precluding Litton from profiting from its invention and nullifying its substantial investment. A jury returned a verdict for Litton on its infringement claims and awarded $1.2 billion in compensatory damages. The District Court subsequently granted Honeywell's motion for judgment as a matter of law, but on Litton's appeal, the Federal Circuit reversed the District Court's judgment and reinstated the verdict of infringement by equivalents. *Litton Sys., Inc.*

[2] RLGs emit laser beams in opposite directions around rings of mirrors, measure the difference in time each beam takes to travel around the rings, and plot the measurements on three separate axes. From those measurements, RLGs pinpoint an airplane's attitude, direction, and heading. RLGs are only as good as their mirrors; for the device to work at all, the mirrors must be close to perfectly reflective—orders of magnitude better than conventional mirrors.

[3] *See Litton Sys., Inc.* v. *Honeywell, Inc.*, 238 F.3d 1376, 1380 (Fed. Cir. 2001) ("*Litton III*"). Section 112 requires the inventor to include claims which "particularly point out and distinctly claim the subject matter [he] regards as his invention." *See* 35 U.S.C. § 112.

v. *Honeywell, Inc.*, 87 F.3d 1559 (Fed. Cir. 1996) ("*Litton I*").

Honeywell petitioned this Court for a writ of certiorari. While Honeywell's petition was pending, this Court decided *Warner-Jenkinson Co.* v. *Hilton Davis Chemical Co.*, 520 U.S. 17 (1997), in which it reaffirmed the vitality of the doctrine of equivalents. The petitioner in *Warner-Jenkinson* offered various policy arguments for abrogating the doctrine, but this Court refused to entertain them, stressing that they were more appropriately addressed to Congress—which could "legislate the doctrine of equivalents out of existence any time it chooses." *Id.* at 28. The Court also noted that "chang[ing] so substantially the rules of the game," as petitioner had urged, could "subvert the various balances the PTO sought to strike when issuing the numerous patents which have not yet expired and which would be affected by its decision." *Id.* at 32 n.6.

After *Warner-Jenkinson* issued, this Court granted Honeywell's petition for certiorari, vacated *Litton I*, and remanded for consideration in light of *Warner-Jenkinson*. 520 U.S. 1111 (1997). Back before the Federal Circuit, Honeywell claimed that Litton was completely barred from invoking the doctrine of equivalents, arguing that after *Warner-Jenkinson*, "if a claim amendment has been added for reasons of patentability, prosecution history estoppel automatically bars all equivalents for that element." *Litton Sys., Inc.* v. *Honeywell, Inc.*, 140 F.3d 1449, 1455 (Fed. Cir. 1998) ("*Litton II*"). The Federal Circuit rejected that approach, noting that Honeywell's argument would "bar after-arising equivalents expressly approved by the Supreme Court and bar any equivalents whatsoever to the vast majority of claim limitations amended during patent prosecution." *Id.* The court explained that *Warner-Jenkinson* "did not in fact effect such a sweeping change;" rather, the "entire context of the *Warner-Jenkinson* opinion shows that the Supreme Court approved the PTO's practice of requesting amendments with the

understanding that the doctrine of equivalents would still apply to the amended language." *Id.* Far from creating a new, rigid estoppel rule, *Warner-Jenkinson* "adhered to the long standing doctrine that estoppel only bars recapture of that subject matter actually surrendered during prosecution." *Id.*

The *Litton II* panel concluded, however, that the jury in Litton's case had employed an improper claim construction which may have "propagate[d] into [its] equivalence determination," and that factual questions remained underlying the scope of prosecution history estoppel. *Id.* The court accordingly vacated the jury's verdict on infringement by equivalents and remanded the case to the District Court for, *inter alia*, a determination of the facts underlying the scope of prosecution history estoppel. *Id.* at 1465.

Back in the District Court, Honeywell resubmitted its motions for judgment as a matter of law and for summary judgment. The District Court granted Honeywell's motions, and Litton appealed once again.

After Litton's appeal had been briefed and argued, the Federal Circuit issued its splintered en banc decision in *Festo Corp.* v. *Shoketsu Kinzoku Kogyo Kabushiki Co.*, 234 F.3d 558 (Fed. Cir. 2000) (reprinted at Pet. App. 1a). The *Festo* majority held that prosecution history estoppel applied whenever a claim was amended "for any reason related to the statutory requirements for a patent," and that if prosecution history estoppel applied to a claim element, "there is *no* range of equivalents available for the amended claim element. Application of the doctrine of equivalents to the claim element is completely barred." *Id.* 9a, 14a (emphasis added).

The consequences of the new *Festo* rule for Litton were immediate and dramatic. On February 5, 2001, the Federal Circuit issued a terse decision affirming judgment for Honeywell on Litton's patent claims—not on the grounds the parties had been litigating, but solely on the strength of the

intervening decision in *Festo*. *Litton Sys., Inc.* v. *Honeywell, Inc.*, 238 F.3d 1376 (Fed. Cir. 2001) ("*Litton III*"). The Federal Circuit noted that Litton had amended a claim term for patentability reasons—specifically, in response to the PTO's rejection of its reissue patent under 35 U.S.C. § 112, ¶2. 238 F.3d at 1380. Accordingly, the Federal Circuit ruled, the Section 112 amendment Litton made to "more particularly point out" its invention, 35 U.S.C. § 112, gave rise to prosecution history estoppel under the new *Festo* rule, completely barring Litton from invoking the doctrine of equivalents. *Id.*

The Federal Circuit acknowledged that it had specifically reaffirmed the "flexible bar" approach to prosecution history estoppel in *Litton II*. *Id.* The court concluded, however, that because it had now adopted a "contrary rule of law regarding the scope of prosecution history estoppel for amended claim limitations, the law of the case doctrine does not preclude us from applying the complete bar adopted en banc in *Festo*." *Id.* Litton was consequently "completely barred as a matter of law from asserting that [Honeywell's] accused devices meet the [amended] limitation under the doctrine of equivalents." *Id.* Thus, the same claims on which a jury had previously found in Litton's favor—and had awarded Litton $1.2 billion in compensatory damages—were reduced to nothing.

Litton filed a petition for certiorari questioning the *Festo* rule and its retroactive application in Litton's case. No. 00-1617 (filed April 23, 2001). That petition is pending.

Even aside from the disappearing $1.2 billion verdict, Litton's circumstances present a particularly compelling case for application of the doctrine of equivalents as it existed before *Festo* rewrote the rule book. Litton challenged two of Honeywell's processes for making RLG mirrors; one such process, the District Court concluded, infringed Litton's patent either literally or "within the *narrowest range of*

equivalents." *Litton Sys., Inc.* v. *Honeywell, Inc.*, 1995 WL 366468, at *45 (C.D. Cal. 1995) (emphasis added). Yet even in a case where the infringing process fell within the "narrowest range" of equivalents, *Festo*'s new estoppel rule still completely barred any recourse to the doctrine—and did so retroactively.

Honeywell was also not some blameless innovator trying to stay on the right side of Litton's patent but uncertain of its bounds. Honeywell knew precisely what it was doing when it modeled its process on Litton's. Its own documents acknowledge that it would face a "large lawsuit!" if it appropriated Litton's proprietary information, but it nonetheless induced a Litton consultant to share that information, promising to indemnify him for legal costs and damages after he expressed the fear that what Honeywell had in mind would infringe Litton's patent rights. *Litton I*, 87 F.3d at 1573. All these facts and more amply supported the jury's finding that Honeywell had willfully infringed Litton's patent. *See id.* at 1573-74. But because *Festo* cut off all recourse to the doctrine of equivalents for amended claims, Honeywell can now escape liability for its calculated decision to copy Litton's process with only the most insignificant alterations.

Litton accordingly has a compelling interest in this Court's disposition of the *Festo* case. Litton appreciates that the parties and numerous other amici will fully brief the pertinent issues of patent law. Litton's participation as amicus will instead focus on the legal implications of the adoption of the new *Festo* rule for those who—like Litton—had valuable property rights taken from them as a result of the Federal Circuit's change in "the rules of the game." *Warner-Jenkinson*, 520 U.S. at 32 n.6.[4]

[4] We recognize that this Court "do[es] not ordinarily address issues only raised by amici." *Kamen* v. *Kemper Fin. Servs., Inc.*, 500 U.S. 90, 97 n.4 (1991). Here, however, the new rule's impact on settled property rights and the impropriety of its retrospective application were raised repeatedly by the dissenters below, *see*, e.g., Pet. App. 110a-111a (Michel, J., dissenting), *id.* 148a, 155a (Newman, J., dissenting), and were implicitly rejected by the majority. *See Lebron* v. *National R.R. Passenger Corp.*, 513 U.S. 374, 379 (1995) ("Our practice 'permit[s] review of an issue not pressed so long as it has been passed upon.' ") (quoting *United States* v. *Williams*, 504 U.S. 36, 41 (1992)). And in any event, the constitutional and equitable issues we address simply underscore the fundamental unfairness of the *Festo* decision—an issue central to petitioner's arguments below and in this Court.

SUMMARY OF ARGUMENT

The doctrine of equivalents is a fundamental principle of patent law. Developed a century and a half ago, the doctrine was designed to protect a patentee against unscrupulous copyists who follow a patent's claims almost—but not quite—to the letter. *See Winans* v. *Denmead*, 56 U.S. (15 How.) 330, 343 (1854) ("The exclusive right to the thing patented is not secured, if the public are at liberty to make substantial copies of it, varying its form or proportions."). A hundred years after *Winans*, this Court reaffirmed the doctrine in *Graver Tank & Mfg. Co.* v. *Linde Air Prods. Co.*, 339 U.S. 605, 607 (1950), explaining that the "essence of the doctrine is that one may not practice fraud on a patent," and that to prohibit nothing other than "[o]utright and forthright duplication" would "foster concealment rather than disclosure of inventions, which is one of the primary purposes of the patent system." This Court again reaffirmed the doctrine in *Warner-Jenkinson*, 520 U.S. 17, in which the petitioner had asked the Court to hold that application of the doctrine was completely barred whenever a patentee amended his claims to surrender subject matter, whatever the reason for the amendment. Citing the doctrine's long history, this Court refused "[t]o change so substantially the rules of the game now." *Id.* at 32 & n.6.

In *Festo Corp.* v. *Shoketsu Kinzoku Kogyo Kabushiki Co.*, however, the en banc Federal Circuit retroactively changed the rules of the game in emphatic fashion. Relying almost

exclusively on the perceived policy need for more definite notice in patent claims, at the expense of established precedent and competing policy considerations, the *Festo* majority—over four separate dissents—declared that claims amended to meet any statutory requirement relating to patentability completely barred the patentee from invoking the doctrine of equivalents as to the amended claim. A panel of the Federal Circuit subsequently applied *Festo* to Litton, holding that Litton—which had previously obtained a billion-dollar jury verdict on its patent claims—was completely barred from arguing that its competitor Honeywell had infringed its patent by equivalents.

The decision in *Festo* divested thousands of patent holders like Litton of long-held property rights and amounts to an unconstitutional taking. Inventors sought patents—and the PTO granted them—knowing that under settled Supreme Court and Federal Circuit precedent, if claim terms were amended, as commonly occurs during prosecution, only subject matter actually surrendered by amendment would be off-limits in a subsequent action for infringement by equivalents. Patentees thus understood that the property for which they had bargained—their patents—included more than the field encircled by the literal terms of the patent; holders also had a right, before *Festo*, to protect their patent from infringement by products that departed from their invention in insubstantial ways. Based on that understanding, and on their corresponding assessment of their patents' value, patentees also entered into relationships with licensees that took into account the entire field of their patent rights.

The *Festo* majority's sudden departure from this settled line of precedent retroactively changed the terms of the bargains struck by patent holders with the PTO by effectively reducing the scope of their patents to their literal terms. After the Federal Circuit's decision, patentees who had amended their claims for patentability reasons were stripped of the

value of their patents, and their carefully negotiated license agreements were rendered valueless.

Such an action—if undertaken by the legislative or executive branch—would plainly constitute a taking of private property without just compensation in violation of the Fifth Amendment's Takings Clause. The *Festo* majority's forced reallocation of property rights should be treated just the same. The *Festo* majority self-consciously acted as a legislative policymaking body in crafting its new rule, and it should be bound by the same constitutional constraint.

Even if this Court is inclined to affirm *Festo* on the merits, moreover, it should avoid the serious constitutional question presented by the retroactive divestment of settled patent rights and hold that the decision should apply prospectively only. The *Festo* decision readily satisfies the three-factor test for prospective application announced in *Chevron Oil Co.* v. *Huson*, 404 U.S. 97 (1971). The Federal Circuit's decision was a sudden and unpredictable departure from prior Federal Circuit precedents; purely prospective application of the new rule would not defeat—and in fact would enhance—its announced purpose; and retrospective application of the rule would have unduly harsh consequences for those who sought, amended, and received their patents before *Festo*'s radical new edict. Prospective application is the norm for a new legislative rule, and that—in its provenance, scope, and impact—is what the *Festo* majority has announced.

ARGUMENT

I. THE DECISION BELOW RAISES GRAVE CONSTITUTIONAL CONCERNS UNDER THE TAKINGS CLAUSE.

It has "long been settled" "[t]hat a patent is property, protected against appropriation both by individuals and by government." *Hartford-Empire Co.* v. *United States*, 323

U.S. 386, 415 (1945) (citing cases); *see Union Paper-Bag Mach. Co.* v. *Murphy*, 97 U.S. 120, 121 (1877) ("[r]ights secured to an inventor by letters-patent are property"); 35 U.S.C. § 261 ("patents shall have the attributes of personal property"). Over a hundred years ago, the Court specifically declared that "the right of the patentee * * * [i]s secured, as against the government, by the constitutional guaranty which prohibits the taking of private property for public use without compensation." *Hollister* v. *Benedict & Burnham Mfg. Co.*, 113 U.S. 59, 67 (1885); *see William Cramp & Sons Ship & Engine Bldg. Co.* v. *International Curtis Marine Turbine Co.*, 246 U.S. 28, 39-40 (1918) ("rights secured under [a] * * * patent" are "property and protected by the guarantees of the Constitution and not subject therefore to be appropriated even for public use without adequate compensation").

As this Court observed in *Kaiser Aetna* v. *United States*, 444 U.S. 164, 176 (1979), the "right to exclude" is "one of the most essential sticks in the bundle of rights that are commonly characterized as property." The very "essence of the patent privilege" is the "right to exclude everyone from making * * * the thing patented, without the permission of the patentee" during the term of the patent. *Bloomer* v. *McQuewan*, 55 U.S. (14 How.) 539, 549 (1852); *see Transparent Wrap Mach. Corp.* v. *Stokes & Smith Co.*, 329 U.S. 637, 643 (1947); 35 U.S.C. §§ 154(a)(1), 271(a). That, after all, is part of the "carefully crafted bargain" of the patent system: a patent holder is entitled to exclusive use of his idea for a period of years, in exchange for making that idea public and conferring on the public the right to practice the invention at the end of the period of exclusive use. *Bonito Boats, Inc.* v. *Thunder Craft Boats, Inc.*, 489 U.S. 141, 150-151 (1989).

The bargain created by the patent statutes is renewed each time a patent is granted, because every patent is a "contract between the government and the patentee." *Photo Elecs. Corp.* v. *England*, 581 F.2d 772, 776 (9th Cir. 1978). When

an inventor submits a patent application to the PTO, he negotiates with that Office the scope of his patent protections and thus the terms of his bargain with the government. That process of negotiation is a meticulous back-and-forth, and applications are commonly—in some fields, almost always—amended during patent prosecution. *See Hughes Aircraft Co.* v. *United States*, 717 F.2d 1351, 1363 (Fed. Cir. 1983) ("Amendment of claims is a common practice in prosecution of patent applications"); Pet. App. 148a n.21 (Newman, J., dissenting) ("For complex inventions the percentage of unamended applications is vanishingly small.").

At the end of the process—the PTO having sought various clarifications, concessions, and amendments from the putative patent holder—the bargain is struck, and a patent issues. For decades, that contract has been understood by all involved—including those at the PTO, *see Warner-Jenkinson*, 520 U.S. at 32 n.6—to include something more than the literal terms of the patent. *See Graver Tank*, 339 U.S. at 607. As the Federal Circuit explained countless times before *Festo*, a patentee was entitled to claim not only literal infringement but infringement by equivalents as well, so long as he did not recapture through his equivalents claim any subject matter expressly surrendered during prosecution. *See* Pet. App. 97a-103a (Michel, J., dissenting) (citing fifty-two cases articulating this principle). Accordingly, before *Festo*, patent holders—the vast majority of whom had amended claims during prosecution—possessed enforceable property rights in their inventions extending to a field outside the literal claim language, but insubstantially different from it, *provided that* they had not specifically disclaimed such subject matter during prosecution.

Those rights do not exist any more. *Festo* erased them by whittling back to their literal terms the scope of patent claims amended for patentability reasons. As the dissenters noted

below, the new rule has the most pernicious impact on the holders of "most of the 1,200,000 patents that are unexpired and enforceable," because it substantially reduced the "effective scope, and thus, the value," of those patents, disrupting innumerable existing commercial relationships. Pet. App. 110a (Michel, J., dissenting). Put another way, when the *Festo* majority changed the terms of the thousands of careful bargains patent holders had struck with the government years before, it eradicated part of the consideration for those bargains. *See Richmond Screw Anchor Co.* v. *United States*, 275 U.S. 331, 345 (1928) (elimination of infringement action "would seem to raise a serious question * * * under the Fifth Amendment").

Festo directs that the thousands of patentees who amended their claims during prosecution in reliance on settled patent law will receive virtually no value from their patents, thwarting their expectations that they would be able to protect their patent, and insubstantial changes thereto, from "unscrupulous copyist[s]." *Graver Tank*, 339 U.S. at 607. The patentees' expectations that they would receive value from their patents were reasonable –the doctrine of equivalents was alive and well for a century and a half before *Festo*—and they were investment-backed: those patentees poured innumerable resources into securing the patents now subject to only literal infringement analysis, and they negotiated countless license arrangements operating on the assumption that their patents were worth something more than next to nothing. *See Penn Central Transp. Co.* v. *New York City*, 438 U.S. 104, 124 (1978) (extent to which governmental action interferes with "investment-backed expectations" is relevant consideration in takings analysis).

That the taking was accomplished in this instance by a court rather than Congress makes it no less an affront to the Fifth Amendment. *See, e.g., Webb's Fabulous Pharmacies, Inc.* v. *Beckwith*, 449 U.S. 155, 164 (1980) ("Neither the Florida legislature by statute, nor the Florida courts by

judicial decree, may accomplish [a taking] simply by recharacterizing" private property as a public asset); *Hughes* v. *Washington*, 389 U.S. 290, 298 (1967) (Stewart, J., concurring) ("[T]he Due Process Clause of the Fourteenth Amendment forbids * * * confiscation by a State, no less through its courts than through its legislature"); Barton H. Thompson, Jr., *Judicial Takings*, 76 Va. L. Rev. 1449, 1500 (1990). While a court's incremental changes in law may not often implicate the Constitution, *see Patterson* v. *Colorado*, 205 U.S. 454, 461 (1907), when a court departs in an "utterly unpredictable" way from prior precedent, Pet. App. 110a (Michel, J., dissenting), destroying long-held property rights and expectations, the Takings Clause is directly put at issue.

Justice Stewart made exactly this point in his concurring opinion in *Hughes*, 389 U.S. at 294-298. That case involved the question of ownership of accreted shorelands—land deposited over time by the ocean—adjoining the petitioner's beachfront property. The Supreme Court of Washington applied state law and concluded that the accretion belonged to the State; this Court reversed, concluding that the issue was one of federal law and that under federal law, the accretion belonged to Hughes. *Id.* at 293. Concurring, Justice Stewart observed that the state supreme court had held twenty years earlier that accretions belonged to the owner of the adjoining land—not the State—and that the court's abrupt departure from its earlier precedent implicated the Takings Clause:

> To the extent that the decision of the Supreme Court of Washington * * * arguably conforms to reasonable expectations, we must of course accept it as conclusive. *But to the extent that it constitutes a sudden change in state law, unpredictable in terms of the relevant precedents, no such deference would be appropriate.* For a State cannot be permitted to defeat the constitutional prohibition against taking property without due process of law by the simple device of asserting retroactively that the property

it has taken never existed at all. [*Id.* at 296-297 (emphasis added).]

Justice Stewart further explained that while the state supreme court "[o]f course * * * did not conceive of this action as a taking" when it departed from its earlier precedent, the "Constitution measures a taking of property not by what a State says, or by what it intends, but by what it *does*." *Id.* at 298 (emphasis in original). *See also Muhlker* v. *New York & Harlem R.R.*, 197 U.S. 544, 570 (1905) (power of state courts to "declare rules of property or change or modify their decisions" may not be "exercised to take away rights which have been acquired by contract and have come under the protection of the Constitution of the United States"). These principles should apply with equal force to decisions of federal courts, just as the Takings Clause applies equally to the federal and state governments. *See* Thompson, 76 Va. L. Rev. at 1513.

This Court, and its individual members, have often acknowledged the force of Justice Stewart's approach. *See, e.g.*, *Stevens* v. *City of Cannon Beach*, 510 U.S. 1207, 1211-12 (1994) (Scalia and O'Connor, JJ., dissenting from denial of certiorari); *Lucas* v. *South Carolina Coastal Council*, 505 U.S. 1003, 1030 (1992); *First English Evangelical Lutheran Church* v. *County of Los Angeles*, 482 U.S. 304, 334 n.11 (1987) (Stevens, J., dissenting); *Bonelli Cattle Co.* v. *Arizona*, 414 U.S. 313, 331 (1973), *overruled on other grounds by Oregon* v. *Corvallis Sand & Gravel Co.*, 429 U.S. 363 (1977) (all citing with approval Justice Stewart's concurrence in *Hughes*). The lower courts have followed Justice Stewart's lead as well. *See, e.g.*, *Cherry* v. *Steiner*, 716 F.2d 687, 692 (9th Cir. 1983) (citing *Hughes* concurrence and concluding that decision in question was not a "startling and unpredictable change" from prior precedent and thus did not implicate the Takings Clause), *cert. denied*, 466 U.S. 931 (1984); *Ultimate Sportsbar, Inc.* v. *United States*, 48 Fed. Cl. 540, 550 (Fed. Cl. 2001) ("A judicial taking occurs where a

court's decision that does not even 'arguably conform[] to reasonable expectations' in terms of relevant law of property rights effects a 'retroactive transformation of private into public property' ") (quoting *Hughes*, 389 U.S. at 297 (Stewart, J., concurring)); *Sotomura* v. *County of Hawaii*, 460 F. Supp. 473, 481, 482-483 (D. Haw. 1978) (citing *Hughes* concurrence and holding that "[t]he Hawaii Supreme Court's retroactive application [of standards setting boundary of property at vegetation line, rather than high water mark], was so radical a departure from prior state law as to constitute a taking of the Owners' property by the State of Hawaii without just compensation").

Justice Stewart's concurring statement applies by its terms to exactly these circumstances. The Federal Circuit's "utterly unpredictable" decision, Pet. App. 110a (Michel, J., dissenting), all but eliminated recourse to the doctrine of equivalents, demolishing the property interests of thousands of patent holders. And as even the majority recognized, its holding was a substantial change of course from its approach in cases decided as recently as three months before *Festo* and dating back to the creation of the Federal Circuit. *See* Pet. App. 25a ("In reaching our holding, we are mindful of the Supreme Court's teaching that binding precedent is not to be lightly discarded."); *id.* 97a-103a (Michel, J., dissenting) (listing over fifty prior cases overruled by *Festo*, dating from 1983 to August 2000). The Federal Circuit's sudden departure from its prior precedent, so completely "unpredictable in terms of the relevant precedents," *Hughes*, 389 U.S. at 296 (Stewart, J., concurring), divested patent holders of their settled property rights, rendered their license arrangements practically valueless, and worked a taking of patent holders' property for public use.

Festo's unconstitutional impact is readily apparent in Litton's case. Seven years before *Festo* issued, Litton tried its infringement claims to a jury. The jury found Honeywell to have willfully infringed Litton's patent by equivalents,

awarding Litton $1.2 billion in compensatory damages. That $1.2 billion is no more after *Festo*; it has gone the way of Litton's patent rights. Instead, Honeywell—clearly on notice that it was treading on Litton's patent and proprietary rights, *Litton I*, 87 F.3d at 1573—has been accorded the privilege of copying every element of Litton's patented mirror-coating process by merely changing an insubstantial detail. Litton's loss is what *Festo* has wrought, in concrete terms. *See* Kevin A. Wolff, *et al.*, *The Unspoken Loss In Shareholder Value: Patent Rights Take A Hit*, Vol. 8, No. 21 Mealey's Litigation Reports: Patents 26, 31 (Apr. 2, 2001) (noting that "the value of Litton's patent * * * drop[ped] to nothing" after *Festo*).

We recognize, of course, that while this Court has not definitively rejected the proposition that the Takings Clause can apply to judicial decisions, it has also yet to find that such a decision violated the Clause.[5] The issue rarely surfaces, which is understandable; the Clause is not implicated when courts merely apply settled law to the facts, and rarely comes into play even when courts reinterpret the law. *See Patterson*, 205 U.S. at 461 (noting that "in general, the decision of a court upon a question of law, however wrong and however contrary to previous decisions, is not an infraction of the Fourteenth Amendment merely because it is wrong or because earlier decisions are reversed"—but that "[e]xceptions have been held to exist"). Put another way, the

[5] *But cf.* Thompson, 76 Va. L. Rev. at 1469-70 (analyzing *PruneYard Shopping Center* v. *Robins*, 447 U.S. 74 (1980), as applying conventional takings analysis to a judicial takings case). In *Rogers* v. *Tennessee*, 121 S. Ct. 1693 (2001), this Court acknowledged that the Constitution restricts a court's ability to change a common law rule and apply the new rule retroactively. *Rogers* explained that judicial abrogation of a common-law criminal rule, if "unexpected and indefensible by reference to the law which had been expressed prior to the conduct in issue," violated the Due Process Clause. *Id.* at 1700 (quotation omitted).

Takings Clause hardly ever comes into play when a court acts like a court.

Here, however, the *Festo* majority quite self-consciously acted like a legislative or rulemaking body—or as one court has put it, "a substantive policymaker, a court with a mission"[6]—when it jettisoned its settled "flexible bar" estoppel principle and crafted a new rule to take its place. To begin with, the court sua sponte posed five broad questions for the parties to address on rehearing en banc, as if the procedure were akin to notice-and-comment rulemaking. *See* Pet. App. 2a-3a. In answering those questions, the majority invoked "its special expertise" and "role as the sole court of appeals for patent matters," *id.* 19a, 24a, *see also id.* 66a (Lourie, J., concurring) ("Our court was created with the opportunity and mandate to observe such problems and to act upon a possible solution."), suggesting that the majority conceived its charter as somewhat broader than the constitutional one of deciding the case before it. *Cf. Marbury* v. *Madison*, 5 U.S. (1 Cranch) 137 (1803). The majority rather blithely dismissed applicable Supreme Court precedent as insufficiently "explicit and carefully considered," Pet. App. 18a—apparently adopting the notion, as one concurring judge put it, that this Court would not "wish[ ] to stand in the way of a sensible solution" to the problem the majority perceived. *Id.* 62a (Plager, J., concurring). It just as cavalierly rejected its own compelling body of precedent, *see id.* 97a-103a (Michel, J., dissenting), engaging instead in a remarkably candid weighing of policy alternatives. *Id.* 24a-30a.

Indeed, *Festo*'s new rule is predicated on the majority's conclusion that one aspect of patent policy—the "notice function" of the patent laws—was of "paramount" importance compared to other countervailing policies—such as the need, expressed in 150 years of Supreme Court precedent, to

[6] *Control Resources, Inc.* v. *Delta Elecs., Inc.*, 133 F. Supp. 2d 121, 123 (D. Mass. 2001).

give a patentee "meaningful protection" from infringers. *Id.* 24a (majority), 70a (Michel, J., dissenting). As Judge Newman explained in dissent, the majority chose to effect "a change in industrial policy," "legislat[ing] a new balance between inventor and imitator." *Id.* 154a, 149a. Rather than applying its expertise to formulate a balanced "test for equivalence in the orderly course of case-by-case determinations," *Warner-Jenkinson*, 520 U.S. at 40—the way courts proceed—the *Festo* majority instead made a sweeping policy pronouncement of the sort this Court found was best left to Congress. *Id.* at 28.[7] When it chose to act as a legislative, policymaking body, the *Festo* majority forfeited whatever claim it had not to be bound by the Takings Clause.

II. THE DECISION BELOW, IF AFFIRMED, SHOULD APPLY PROSPECTIVELY ONLY.

If this Court affirms *Festo*, it should avoid the intractable constitutional problem presented by the Federal Circuit's decision and hold that *Festo* should apply prospectively only. *See* Thompson, 76 Va. L. Rev. at 1500. Indeed, the *Warner-Jenkinson* Court recognized that a rigid estoppel rule, if retroactively applied, would subvert patentees' rights and expectations when it stressed the importance of maintaining the established "rules of the game" for the benefit of those already on the playing field.

The petitioner in *Warner-Jenkinson* had pressed for a rule announcing a strict application of prosecution history estoppel, such that any claim amendment, regardless of the reason, gave rise to estoppel. *See* 520 U.S. at 30. This Court rejected that approach, noting that case law had consistently probed

[7] To compound the problem further, the Federal Circuit changed the rules in an area where participants' property rights are particularly concrete—and where the government takes an overt role in the process of establishing those rights. Especially in these circumstances, a policy-driven overturning of settled doctrine constitutes a taking.

the reasons behind the surrender of subject matter during prosecution and finding "no substantial cause for requiring a more rigid rule invoking an estoppel regardless of the reasons for the change:"

> That petitioner's rule might provide a brighter line for determining whether a patentee is estopped under certain circumstances is not a sufficient reason for adopting such a rule. This is especially true where, as here, the PTO may have relied upon a flexible rule of estoppel when deciding whether to ask for a change in the first place. To change so substantially the rules of the game now could very well subvert the various balances the PTO sought to strike when issuing the numerous patents which have not yet expired and which would be affected by our decision. [*Id.* at 32 n.6.]

Although it declined to create a hard-line rule against prosecution history estoppel in all cases where a claim was amended during prosecution, this Court held that with respect to the narrow category of *unexplained* claim amendments, a rebuttable presumption arose that the amendment was made for a substantial reason related to patentability. *Id.* at 32. If that presumption were not overcome, "prosecution history estoppel would bar the application of the doctrine of equivalents as to that element." *Id.*

Justice Ginsburg, joined by Justice Kennedy, added an additional "cautionary note" in her concurrence, concerning application of the rebuttable presumption in cases "in which patent prosecution has already been completed." *Id.* at 41. Justice Ginsburg observed that "wooden[ ]" application of the presumption "might in some instances unfairly discount the expectations of a patentee who had no notice at the time of patent prosecution that such a presumption would apply," and who would have had "little incentive" at the time of patent prosecution to create a record in the file wrapper to satisfy this later-arising clarification. *Id.* Justice Ginsburg

noted that the Court's opinion was "sensitive to this problem," *id.* (quoting opinion of the Court, 520 U.S. at 32 n.6), and encouraged the Federal Circuit on remand to consider whether the patent holder in that case had offered reasons—or could now establish such reasons—for its amendment, "bearing in mind the prior absence of clear rules of the game." *Id.* at 42.

The *Festo* majority, however, concluded without discussion that it would retroactively apply its new estoppel rule—one that sweeps far more broadly, and does far more damage, than *Warner-Jenkinson*'s carefully circumscribed rebuttable presumption. That irony was not lost on the dissenting judges. *See* Pet. App. 148a (majority ignored *Warner-Jenkinson*'s "warnings against derogation of vested rights and expectancies, and has declined to make this decision applicable only prospectively") (Newman, J., dissenting); *id.* 110a ("Today's ruling offers no 'grandfathering' provision for the vast numbers of unexpired patents that contain amended claim limitations, and thus that will become increasingly susceptible to copying under today's new rule.") (Michel, J., dissenting). Even if this Court affirms *Festo*, it should hold that the new rule should apply prospectively only, to patent applications submitted after *Festo* issued. Otherwise the Court will be imposing on patentees a bargain far different from that into which they entered when they disclosed the details of their inventions.

In *Chevron Oil Co.* v. *Huson*, 404 U.S. 97 (1971), this Court laid out a three-part test for examining whether a new rule of law should be applied prospectively:

> *First*, the decision to be applied nonretroactively must establish a new principle of law, either by overruling clear past precedent on which litigants may have relied, or by deciding an issue of first impression whose resolution was not clearly foreshadowed. *Second*, * * * we must * * * look[] to the prior history of the rule in question, its purpose and effect, and whether retrospective operation will further or retard its operation. *Finally*, we have weighed the inequity imposed by retroactive application, for where a decision of this Court could produce substantial inequitable results if applied retroactively, there is ample basis in our cases for avoiding the injustice or hardship by a holding of nonretroactivity. [*Id.* at 106-107 (quotations omitted and emphasis added).]

See also American Trucking Ass'ns, Inc. v. *Smith*, 496 U.S. 167, 179-183 (1990) (plurality) (applying *Chevron* test and concluding that decision in *American Trucking Ass'ns, Inc.* v. *Scheiner*, 483 U.S. 266 (1987), would not apply retroactively in the case before it).

This Court narrowed *Chevron*'s holding somewhat in *Harper* v. *Virginia Department of Taxation*, 509 U.S. 86, 90 (1993), which held that "this Court's application of a rule of federal law to the parties before the Court requires every court to give retroactive effect to that decision." *Harper* leaves open the question here, which is when it may be proper for the *first* case to announce a new rule to apply that rule prospectively only. *See James B. Beam Distilling Co.* v. *Georgia*, 501 U.S. 529, 544 (1991) (opinion of Souter, J.) (distinguishing between "pure prospectivity" and "selective" prospectivity); *Harper*, 509 U.S. at 97; *cf. Reynoldsville Casket Co.* v. *Hyde*, 514 U.S. 749, 761-763 (1995) (Kennedy, J., concurring). That question is still controlled by *Chevron*, and application of *Chevron*'s three-step test indicates that *Festo* should be applied prospectively only.

Festo clearly satisfies the first *Chevron* test of nonretroactivity, as even the judges in the majority seemed to appreciate. The majority's new, sweeping principle of law—a patentee who amended a claim for any reason related to patentability is barred from recourse to the doctrine of equivalents as to that element—undercut Supreme Court precedent dating to the mid-nineteenth century and overruled

a slew of precedent dating from the earliest days of the Federal Circuit to decisions announced just prior to *Festo*. *See Harper*, 509 U.S. at 112 (Kennedy, J., concurring) (applying *Chevron* and asking whether decision in question represented an "avulsive change which caused the current of the law thereafter to flow between new banks") (quotation omitted). The *Festo* majority took pains, in fact, to explain that in its view, the principle applied in the fifty-odd decisions overruled by *Festo* had become "unworkable"—standard argot when the doctrine of *stare decisis* is declared to be overcome in a particular case. *See* Pet. App. 25a.[8]

The second part of *Chevron* is easily satisfied as well. The "purpose and effect" of the new *Festo* rule, *Chevron*, 404 U.S. at 107 (internal quotation omitted), as the majority saw it, was to further the "notice function" of patents by providing the public with a clear view of the scope of patent protection. *See* Pet. App. 24a-25a. But the majority's stated purpose can best be furthered, and the "notice function" satisfied, by prospective application of the new rule. As the *Festo* majority put it, prosecution history estoppel embodies the notion that "the patentee, during prosecution, has created a record that fairly notifies the public that the patentee has surrendered the right to claim particular matter as within the reach of the patent." *Id.* 6a. But patentees who received their patents under the prior regime of course had no opportunity before the PTO to create the record *Festo* now requires, and thus were not able to frame their patents to maximize their own protections in light of the newly-elevated notice function and the newly-stringent estoppel rule. *See*

[8] The *Festo* majority also claimed that its holding was based on a second "line" of precedent consisting of two cases from 1984 which ostensibly supported its new rule. *See id.* 20a; *but see id.* 93a (Michel, J., dissenting) (explaining that the two cases employing "rigid bar" in fact followed "flexible estoppel" doctrine overruled by *Festo*). Those two cases, which at best debatably support the majority's position, are a meager fig leaf that cannot alter the conclusion that *Chevron*'s first test is plainly met.

id. 113a (Linn, J., dissenting) (rigid estoppel principle changed the "rules under which prosecution strategies were formulated for thousands of extant patents no longer subject to correction").

Construing the new rule to apply retroactively furthers the "notice" function in only one undesirable way: it encourages potential infringers to take advantage of the newly "paramount" notice function of patent claims, *id.* 24a, by poring over extant patents, looking for claims amended for patentability reasons (or for no discernible reason), and making insubstantial changes to those claims. *See id.* 126a (Linn, J., dissenting) ("[T]he majority's new rule hands the unscrupulous copyist a free ride on potentially valuable patented technology, as long as the copyist merely follows the prosecution history road map and makes a change, no matter how trivial or insubstantial, to an element otherwise covered by * * * a narrowed claim limitation").

Finally, it would be inequitable to apply *Festo* retroactively to patent holders who relied on the long-settled "flexible bar" in prosecuting their patents before the PTO. *See American Trucking Ass'ns* v. *Smith*, 496 U.S. at 185 ("In determining whether a decision should be applied retroactively, this Court has consistently given great weight to the reliance interests of all parties affected by changes in the law.") (citing *Cipriano* v. *City of Houma*, 395 U.S. 701, 706 (1969)). Before *Festo*, an inventor sought a patent from the PTO with the understanding that if he chose to amend his claims for patentability reasons, he could still make later use of the doctrine of equivalents to defend against an infringer—as long as he did not recapture in the process the prior art he had surrendered by amendment. That mutual understanding rested not only on the raft of settled Federal Circuit precedent applying the "flexible bar" rule, but on a comparable host of Supreme Court precedent dating back a century and a half to *Winans*, which first articulated the doctrine. *See* Pet. App. 74a-91a (Michel, J., dissenting, citing cases). But that is no longer

the law. After *Festo*, claims amended for any reason relating to patentability—five, ten, or fifteen years ago—are now ripe for the picking; all but the dullest infringer will design around those amended claims, knowing that the patent holder is powerless to use the doctrine of equivalents to keep blatant infringement in check. Applying *Festo* to those patent holders would produce the "harsh and disruptive effect" of rendering their patent rights—and their related license agreements—useless and valueless. *American Trucking Ass'ns* v. *Smith*, 496 U.S. at 191.

Chevron prospectivity may not be available when a court announces a new interpretation of the Constitution, because the court's new reading of the law is presumed always to have been the law. *See American Trucking Ass'ns* v. *Smith*, 496 U.S. at 201 (Scalia, J., concurring in judgment) ("To hold a governmental act to be unconstitutional is not to announce that *we* forbid it, but that the *Constitution* forbids it; * * * the notion that our interpretation of the Constitution in a particular decision could take prospective form does not make sense"). The issue here is quite different. The *Festo* majority's new rule was not compelled by the dictates of the Constitution or by the terms of a statute; the court simply discarded the old rule and adopted a new one after weighing policy issues and deciding to "legislate[] a new balance between inventor and imitator." Pet. App. 149a (Newman, J., dissenting). Again, the election to engage in such legislative activity suggests that the legislative model—including the norm that legislation operates prospectively only, *see, e.g.*, *Landgraf* v. *USI Film Prods.*, 511 U.S. 244, 265-266 (1994)—should apply to the court's action. *See also Rogers*, 121 S. Ct. at 1705 (Scalia, J., dissenting) ("retroactive revision of a concededly valid legal rule is extremely rare").

In any event, that the *Chevron* test is so clearly satisfied here—coupled with the fact that *Festo* bears all the characteristics of an unconstitutional taking—at least highlights the

fundamental unfairness of the new rule crafted by the *Festo* majority. As we have explained, the inventors who sought and received patents prior to *Festo* have already fixed the terms of their bargains. They cannot renegotiate them now, nor can they make their patents' claims more clear; and it behooves no one—not the PTO, not the patent holder, and not the public—to force patentees to accept the substantially altered terms of the new bargain offered by the *Festo* majority.

CONCLUSION

For the foregoing reasons, the judgment below should be reversed.

Respectfully submitted,

FREDERICK A. LORIG
SIDFORD L. BROWN
BRIGHT & LORIG
633 West 5th Street
Los Angeles, CA 90071
(213) 627-7774

JOHN G. ROBERTS, JR.*
CATHERINE E. STETSON
HOGAN & HARTSON L.L.P.
555 Thirteenth Street, N.W.
Washington, D.C. 20004
(202) 637-5810

RORY J. RADDING
PENNIE & EDMONDS L.L.P.
1155 Avenue of the Americas
New York, NY 10036
(212) 790-9090

STANTON T. LAWRENCE, III
CARL P. BRETSCHER
PENNIE & EDMONDS L.L.P.
1667 K Street, N.W.
Washington, D.C. 20006
(202) 496-4400

* Counsel of Record

Counsel for Amicus Curiae

AUG 31 2001

32

No. 00-1543

Supreme Court, U.S.
FILED
AUG 31 2001
OFFICE OF THE CLERK

IN THE

Supreme Court of the United States

FESTO CORPORATION,
Petitioner,

v.

SHOKETSU KINZOKU KOGYO KABUSHIKI CO., LTD., A/K/A SMC CORPORATION AND SMC PNEUMATICS, INC.,
Respondents.

On Writ of Certiorari to the United States Court of Appeals for the Federal Circuit

---

BRIEF OF *AMICUS CURIAE* NATIONAL INTELLECTUAL PROPERTY LAW INSTITUTE IN SUPPORT OF PETITIONER

JAMES PHILLIP CHANDLER
Counsel of Record
THE CHANDLER LAW FIRM CHARTERED
Suite 300
1815 Pennsylvania Ave., NW
Washington, D.C. 20006
(202) 296-8484
Counsel for Amicus Curiae

August 31, 2001

WILSON-EPES PRINTING CO., INC. – (202) 789-0096 – WASHINGTON, D. C. 20001

22 pp

TABLE OF CONTENTS

	Page
TABLE OF AUTHORITIES	ii
INTEREST OF THE *AMICUS CURIAE*	1
SUMMARY OF ARGUMENT	1
ARGUMENT	4
I. IN *FESTO V. SMC*, THE COURT OF APPEALS FOR THE FEDERAL CIRCUIT EFFECTIVELY OVERRULES THE UNITED STATES SUPREME COURT'S WARNER-JENKINSON V. HILTON-DAVIS DECISION	4
II. FORFEITING THE RESULTS OF U.S. RESEARCH	7
III. THE DOCTRINE OF EQUIVALENTS IS VIRTUALLY ABOLISHED	14
IV. FESTO HAS SHAKEN THE FOUNDATION OF UNITED STATES PATENT LAW	16
CONCLUSION	17

TABLE OF AUTHORITIES

CASES — Page

Exhibit Supply Co. v. Ace Patents Corp., 315 U.S. 126 (1942) 4
Festo Corp. v. SMC Corporation, 234 F.3d. 558 (2000) ..... *passim*
Graver Tank & Mfg. Co. v. Linde Air Prods. Co., 339 U.S. 605 (1950) 2
Loctite Corp. v. Ultraseal Ltd, et a., 781 F.2d at 861 2
Machine Co. v. Murphy, 97 U.S. 120 (1877) 14
Royal Typewriter Co. v. Remington Rand, 168 F.2d 691 (2d Cr. 1948) 15
Warner-Jenkinson Co. v. Hilton Davis Chem. Co., 520 U.S. 17 (1997) ..... *passim*
Winans v. Denmead, 56 U.S. 330 (1853) 15, 16

STATUTES AND CONSTITUTIONAL PROVISIONS

35 U.S.C. § 200 *et seq* 7, 9, 14
35 U.S.C. § 261 2
U.S. CONST. amend. V. 2, 7

OTHER AUTHORITIES

AUTM LICENSING SURVEY, FY 1999 12
Bailey Morris, *Hands-On Spells Danger*, INDEPENDENT, Feb. 28,1993 7
Barbara Ettore, *Working with the Feds*, MGMT. REV., Feb. 1994 8
Brian Deagon, *Leader's Success*, INVESTOR'S BUS. DAILY, Mar, 17, 1993 8

TABLE OF AUTHORITIES—Continued

Page

Guy Webster, *New Satellite-TV to Air in Spring*, ARIZ. REPUBLIC, Dec. 26, 1993 7
Howard W.. Bremer. *University Technology Transfer Evolution and Revolution*, (unpub.) (manuscript on file with author and Council on Governmental Relations) 17
NATIONAL SCIENCE BOARD, Arlington, VA. 9
NAT'L SCI. FOUND., NSF 92-307, RESEARCH AND DEVELOPMENT IN INDUSTRY: 1989, (1992) 8
NATIONAL SCIENCE FOUNDATION, 2000 (NSP-00-1) 9
SCIENCE AND ENGINEERING INDICATORS, 2000 9
Tim Studt, *$158 Billion and Holding for U.S. R&D in 1991*, RES. & DEV., Jan 1991 7
William Neikirk, *Wonders of Technology Could Boost Economy*, CHI. TRIB., Feb. 25, 1993 8

INTEREST OF THE *AMICUS CURIAE*

The National Intellectual Property Law Institute, *amicus curiae*, files this brief in support of the petition to overrule the decision of the United States Court of Appeals for the Federal Circuit in the case at bar.[1]

The *amicus curiae*, the National Intellectual Property Law Institute, is an academic research and teaching institution which limits its research and teaching to the field of intellectual property laws. It seeks by its scholarship to foster philosophically sound policies in patent, trademark, copyright, and trade secret laws and the embracement of new computing technologies by the law, the legal profession and legal institutions.

The National Intellectual Property Law Institute (NIPLI), a non-profit 501(C)(3) institution, is located in downtown Washington, D.C. at 1815 Pennsylvania Avenue, NW, Suite 300, Washington, D.C. 20006.

SUMMARY OF ARGUMENT

The United States Court of Appeals for the Federal Circuit (C.A.F.C.) has adopted a prosecution history estoppel doctrine (estoppel doctrine) that bars the use of the doctrine of equivalents if any change limiting the scope of a claim in a patent application is made during the prosecution process, irrespective of the reason for the change. This estoppel doctrine is a radical departure from existing law. Under the existing law, the doctrine is limited to cases in which the patent applicant is forced to amend, as otherwise the applicant would not have a patentable invention at all. In the history of

---

[1] Written consent to the filing of this brief has been obtained from the petitioner and respondents and is being filed herewith. No counsel for a party authored this brief in whole or in part and no person or entity, other than the *amicus curiae*, its members, or their counsel made a monetary contribution to the preparation or submission of this brief.

patent law, prosecution history estoppel has always been applied when there was a problem with the expression of a claim being expressed as originally filed due to invalidity. Under the new C.A.F.C. created estoppel doctrine, all amendments that result in a narrowing of any element of any claim is completely barred from use of the doctrine of equivalents to protect their invention. This rule is given retrospective application, applying to all existing patent holders and applicants.

There are 1.2 million United States patents being held today. We argue that the change in the estoppel doctrine puts these patents at risk of loss. These patents are vested property rights and cannot be taken or stripped of their value without violation of the Fifth Amendment of the United States Constitution. *See* U.S. CONST. amend. V. Further, it is bad public policy as it disables inventors and deincentivises them from continuing to make the large contribution which they have made in pushing back the frontiers of science producing cures for human diseases and otherwise improving the lives of the people in the United States and around the world.

The owners of patents under existing law own personal property 35 U.S.C. § 261 with vested rights arising out of the equivalencies that were left open to them by pre-existing patent law. *See Warner-Jenkinson Co. v. Hilton Davis Chemical Co.*, 520 U.S. 17 (1997). The Federal Circuit's decision would result in the divestment of these vested patent rights. This point is further highlighted by Judge Linn's opinion, in which Judge Rader joined, where he wrote:

> Because claims are commonly amended during prosecution, prosecution history estoppel touches almost every doctrine of equivalents infringement analysis. *See Loctite*, 781 F.2d at 871, 228 U.S.P.Q. at 96. Although a complete bar would provide bright line enhancement of the notice function of claims, it unfairly subjects almost every patentee to the mercy of verbalism at an early stage of development. *See Graver Tank*, 339 U.S. at 607. Rather than promote technological growth, the majority's new rigid rule will effect a serious invasion of the patentee's security of receiving the full benefit of his invention and is likely to be a disincentive to early disclosure of new inventions and discoveries. I see no substantial cause for the majority's drastic action, and I must, respectfully, dissent from the pronouncement that any time a claim limitation is narrowed by amendment for any statutory purpose, regardless of the nature and extent of the change, prosecution history estoppel completely bars the application of the doctrine of equivalents.

See *Festo v. SMC*, 2000 U.S. App. LEXIS 29979 (Fed Cir. Nov. 29, 2000) (Linn, J., dissenting).

The United States Court of Appeals for the Federal Circuit, seems to directly challenge the unanimous decision of the United States Supreme Court in *Warner-Jenkinson Co. v. Hilton Davis Chemical Co.*, 520 U.S. 17 (1997), and has shaken the very foundation of the American patent system. The public, the bar, and investors have a right to rely upon the authority articulated by a unanimous decision of the United States Supreme Court. They should be able to rely on the Court in shaping their affairs and choosing their investment policy and in the making of license agreements with assignees and users of the various patent rights which they have created.

It is therefore with a sense of the highest urgency that *amicus curiae* respectfully request this Honorable Court to reverse the decision of the United States Court of Appeals for the Federal Circuit in the case at bar.

ARGUMENT

I. IN FESTO V. SMC, THE COURT OT APPEAL FOR THE FEDERAL CIRCUIT EFFECTIVELY OVERRULES THE UNITED STATES SUPREME COURT'S WARNER-JENKINSON V. HILTON-DAVIS DECISION

The principal issue before the Court is whether or not the prosecution history estoppel doctrine should be held within its traditional limits, namely where there is a question of patentability, or whether the doctrine of prosecution history estoppel should be expanded to cover every claim amendment made during the prosecution history of an application as held by the United States Court of Appeals for the Federal Circuit in *Festo. Festo Corp. v. Shoketsu Kinzoku Kogyo Kabushiki Co., Ltd., a/k/a SMC Corporation, and SMC Pneumatics, Inc.*, 234 F.3d. 558 (2000). Further, embedded in these issues is whether the doctrine of equivalents is a viable doctrine after the *Festo* ruling.

In *Warner-Jenkinson*, the United States Supreme Court ruled that while "prosecution history estoppel [is] a legal limitation on the doctrine of equivalents", it is incorrect to conclude "that the *reason* (emphasis added) for an amendment during patent prosecution is irrelevant" to the subsequent application of the prosecution history estoppel doctrine. *Warner-Jenkinson Co. v. Hilton Davis Chemical Co.*, 520 U.S. 17; 1997 U.S. LEXIS 1476, at *11 (U.S. Mar. 3, 1997). The Court further observed that

> prosecution history estoppel was tied to amendments made to avoid the prior art or otherwise to address a specific concern such as obviousness that arguably would have rendered the claimed subject matter unpatentable. Thus, in *Exhibit Supply Co. v. Ace Patents Corp.*, 315 U.S. 126 (1942), Chief Justice Stone distinguished inclusion of a limiting phrase in an original patent claim from the "very different" situation in which

> "the applicant, in order to meet objections in the Patent Office, *based on references to the prior art*, adopted the [limiting] phrase as a substitute for the broader one" previously used.

Warner-Jenkinson, 1997 U.S. LEXIS 1476, at *11 *quoting* 315 U.S. 126, 136, 62 S. Ct. 513, 86 L.Ed. 736 (1942) (emphasis added [by the Court]). . . .

The *Warner-Jenkinson* Court further observed that in each case where it probed the reasoning behind the Patent Office's demand for a change in the written description of a claim, it was because the applicant was "not describing a patentable invention at all." *Warner-Jenkinson*, 1997 U.S. LEXIS 1476, at *12.

But on the other hand, the United States Justice Department, arguing on behalf of the U.S. Patent and Trademark Office (PTO), advised that where

> . . . [t]he PTO has been requesting changes in claim language without the intent to limit equivalents or, indeed, with the expectation that language it required would in many cases allow for a range of equivalents, we should be extremely reluctant to upset the basic assumptions of the PTO without substantial reason for doing so. Our prior cases have consistently applied prosecution history estoppel only where claims have been amended for a limited set of reasons, and we see no substantial cause for requiring a more rigid rule invoking an estoppel regardless of the reasons for a change.

Id. The Court further noted:

> [T]hat petitioner's rule might provide a brighter line determining whether a patentee is estopped under certain circumstances is not a sufficient reason for adopting such a rule. This is especially true where, as here, the PTO may have relied upon a fexible rule of estoppel when deciding whether to ask for a change in the first place. To change so substantially the rules of the game

> now could very well subvert the various balances the PTO sought to strike when issuing the numerous patents which have not yet expired and which would be affected by our decision.

Warner-Jenkinson, 1997 U.S. LEXIS 1476, at *12, n.6. The United States Court of Appeals for the Federal Circuit (the C.A.F.C.) decided to overrule the United States Supreme Court's guidance that their "prior cases have consistently applied prosecution history estoppel *only* where claims have been amended for a *limited set of reasons . . .*" *Id.* at *12. The undaunted *Festo* Court rules that "a narrowing amendment made for *any reason* related to the statutory requirements for a patent will give rise to prosecution history estoppel with respect to the amended claim element." *Festo v. SMC*, 2000 U.S. App. LEXIS 29979 at *11. The C.A.F.C. has thereby greatly expanded the domain in which the prosecution history estoppel doctrine may roam. And wherever it roams, "there is no range of equivalents available for the amended claim element. Application of the doctrine of equivalents to the claim element is completely barred (a 'complete bar')". *Id.* at *13.

This greatly expanded reach of the prosecution history estoppel doctrine was further specifically declined by the U.S. Supreme Court in *Warner-Jenkinson* on the ground that the PTO may have relied upon a flexible rule of estoppel when deciding to ask for a change in the first place. "To change so substantially the rules of the game now could very well subvert the various balances the PTO sought to strike when issuing the numerous patents which have not yet expired and which would be affected by our decision." *Warner-Jenkinson*, 1997 U.S. LEXIS 1476, at *12. In spite of this warning, the C.A.F.C. has subjected all existing patents retroactively to its roaming doctrine of prosecution history estoppel. It has ordered that all existing patents are now subject to substantial limitations if any claim was narrowed for any reason during

prosecution. These existing patentees, under the C.A.F.C. in *Festo*, are completely barred from use of the doctrine of equivalents.

In making this rule, the Federal Circuit has placed in jeopardy 1.2 million existing patents. The rule of *Festo* thereby divests long vested rights of existing patent holders in violation of the Fifth Amendment of the United States Constitution. *See* U.S. CONST. amend. V.

The United States Government, under 35 U.S.C. § 200 *et seq.*, which funds over 59% of the annual basic research budget of the national research universities of the United States, and nearly 100% of the budgets of the national laboratories of the United States, has a financial exposure in excess of one trillion dollars.

It is therefore a matter of the highest priority and of the greatest urgency that the United States Supreme Court resolve this divergent decision of the C.A.F.C. At risk is the untold value of all existing United States patents.

II. FORFEITING THE RESULTS OF U.S. RESEARCH

The United States is currently a primary source of new technology in the world, spending ten times more on basic research than the other G-8 nations combined, and envisions itself as remaining as such in the future. *See* Bailey Morris, *Hands-On Spells Danger*, INDEPENDENT, Feb. 28,1993, available in LEXIS, News Library, CURNWS File; Guy Webster, *New Satellite-TV to Air in Spring*, ARIZ. REPUBLIC, Dec. 26, 1993, available in LEXIS, New Library, CURNWS file (quoting technology forecaster and author Daniel Burrus). Both the public and private sectors in the United States invest large amounts of capital ($158 billion in 1991 and an estimated $249 billion in 2000) each year in research and development (R&D) of new technology. *See* Tim Studt, *$158 Billion and Holding for U.S. R&D in 1991*, RES. & DEV., Jan

1991, at 38, 38 (assessing overall U.S. R&D expenditures for 1991 at $158 billion.) Currently, however, the return on U.S. technology introduced into the global market is not sufficient to cover the overwhelming cost of its production. *See id.* at 38, 42. While the necessary foundations for the utilization of new technology already exists in the United States, this country must restructure its efforts to ensure that it is able to use new technology to successfully accumulate wealth and excel in the global marketplace.

For every dollar spent on basic research in the United States, *See* NAT'L SCI. FOUND., NSF 92-307, RESEARCH AND DEVELOPMENT IN INDUSTRY: 1989, at 33 (1992) (defining basic research as "original investigations for the advancement of scientific knowledge not having specific immediate commercial objectives, although such investigations may be in fields of present or potential interest to the reporting company"), *ten dollars* (emphasis added) is needed to reach advanced development, *See id.* (defining development as "technical activities of a nonroutine nature concerned with translating research findings or other scientific knowledge into products or processes"), and an additional *one-hundred dollars* (emphasis added) is necessary to reach a manufacturing stage. Brian Deagon, *Leader's Success*, INVESTOR'S BUS. DAILY, Mar, 17, 1993, available in LEXIS, News Library, CURNWS File. Of the approximately $249 billion spent each year on R&D, much is allocated for basic research. *See* William Neikirk, *Wonders of Technology Could Boost Economy*, CHI. TRIB., Feb. 25, 1993, at 1, 12, 13. The 1992 federal R&D budget, totaling $100 billion, is divided between military and civilian projects. *Id.* at 12.

Federal expenditures on basic R&D are often in the form of grants to companies who have formulated a proposal as to the type of new technology they seek to create. *See generally* Barbara Ettore, *Working with the Feds,* MGMT. REV., Feb. 1994, at 46, 47 (providing an outline of federal R&D grant programs.) Each grant recipient produces its own research

data in conjunction with the government in the hope of achieving the desired technological goal. *See id.* Extreme modification of patent rules upon which the Congress has relied, *See* 35 U.S.C. §200 *et seq.*, may produce numerous unintended consequences upon the funding system and may result in practical problems that could hinder the effectiveness of the government funding programs.

The confinement of the right to exclude strictly to the letter of the claims of a patent, coupled with the broad application of prosecution history estoppel, is anathema to protecting the results of basic research.

In 1998, an estimate of $26.3 billion dollars was spent for research and development (R&D) at U.S. academic institutions *See* SCIENCE AND ENGINEERING INDICATORS, 2000; NATIONAL SCIENCE BOARD, Arlington, VA; NATIONAL SCIENCE FOUNDATION, 2000 (NSP-00-1). Of this total amount, $15.6 billion was provided by the Federal Government, $5.0 billion by academic institutions, $2.1 billion by state and local governments, $1.9 billion by industry, and $1.8 billion was derived from other sources (foundations, non-profits, gifts, etc.) The Federal Government thus supplied about 59% of the total R&D funding in academia.

Academic activities have been and continue to be heavily concentrated in basic research. In 1998, 69% of the total R&D expenditures went for basic research, 24% for applied research, and 7% for development.

Since the passage of the Bayh-Dole Act in 1980 (35 U.S.C. §200 *et seq.*), the university sector has become increasingly active in the transfer of technology, resulting from R&D activities. Technology is transferred from the University to the public through the private sector. United States patents and foreign patents, are the vehicles in which this technology is made. Today, the academic sector is responsible for issuing about 3% of all U.S. origin patents. The nature of these

patents, arising as they do primarily from basic research, tend to be unique. Many of them represent the basis for totally new products or even new industries (i.e. witness the bio-technology industry which found its origin in the university-based research.)

Because of the often basic nature of the inventions and discoveries patented and in light of the ongoing research programs which may later serve to more clearly demark such inventions and discoveries, it is extremely difficult to precisely define the metes and bounds of a given invention at the outset, or all of the alternatives available, the practice of which may achieve the same result in substantially the same way. To deprive such patented inventions and discoveries of the flexible interpretation accorded by the doctrine of equivalents or to limit them to the literal language of amended claims would open the door to copyists, in particular foreign companies and countries, to appropriate the fundamental concept of those discoveries and inventions.

The research community, national laboratories and university sector has thousands of patents in its cumulative portfolio, many of which have been licensed to the private sector for further development to the point of commercial application. The companies to whom licenses have been issued have been or are engaged in costly development efforts in the expectation that their efforts will be protected from competition under the licensing arrangements so as to permit them to, at minimum, recoup the investment that has been made in the development phase. Moreover, there is an expectation by the research community that revenue in the form of fees and payments will accrue to it to defray the costs of research and patenting, the costs of the technology transfer function, and return additional funds to the research community to support additional research.

It is quite conceivable and, in fact, likely, that the decision by the Court of Appeals for the Federal Circuit in *Festo*, may

well send competitors to these licensees, particularly where the license is exclusive, to review, in detail the prosecution history of the patents and/or patent applications under which the license has been granted to detect any amendment that may be construed as a trigger to invoke prosecution history estoppel. This is one of the nefarious effects of this decision discarding the "flexible rule" approach. It tends to foster and reward copying rather than inventions. Obviously, the unavailability of the doctrine of equivalents applied to any such amendments, as expressed in the claims, would also be carefully reviewed. The penultimate effect could be that licensees would terminate their license agreements to rely upon trivial changes to distinguish over the licensed patents. Competitors too, would seek to distinguish in the same manner. In fact, the hallmark of the American system over the Japanese system has been that patent is only a reward for true inventive step, rather than a mere minor or slight change from the *status quo*.

If a licensee perceived that a competitor, through insubstantial or trivial amendments to a product or process could avoid infringement, there would remain little incentive for the licensee to continue its commercial development program. There would no longer be a risk to benefit ratio that would induce the licensee to continue to finance development and market development with the knowledge that a competitor could avail itself of the inventive concept without the product or market development expenditure. Thus, the C.A.F.C. decision in *Festo* would have, at least, a chilling effect on the potential for licensing inventions by the research community to the extraordinary detriment of the American public. By parity of reasoning, the C.A.F.C. decision could also have a chilling effect upon the willingness of particularly the academic institutions, but also of the government and other research sponsors, to fund further research knowing that the patent coverage obtainable could be so narrowly focused as not to support a competitive advantage.

The scope of this concern is not trivial. In 1999, there were 417 new products introduced which were based upon university research. In addition, 344 new companies (spin-outs) were formed, and $862 million in licensing income and fees were generated from about 8,300 licenses. Moreover, the university sector had 18,617 licenses and options extant and active in that year with reported product sales from 25% of those active agreements. The university sector also received over 12,000 new invention disclosures upon which patent applications and, ultimately licenses, could be based. *See* AUTM LICENSING SURVEY, FY 1999.

The *en banc* majority of the C.A.F.C. in support of its decision stated the following belief.

> [Under the complete bar approach], technological advances that would have lain in the unknown, undefined zone around the literal terms of a narrowed claim under the flexible bar approach will not go wasted and undeveloped due to fear of litigation. The public will be free to improve on the patented technology and design around it without being inhibited by the threat of a lawsuit because the changes could possibly fall within the scope of equivalents left after a claim element has been narrowed by amendment for a reason related to patentability. This certainty will stimulate investment in improvements and design-arounds because the risk of infringement will be easier to determine.

Festo v. SMC, 2000 U.S. App. LEXIS 29979 at *21 (Fed. Cir. Nov. 29, 2000). It is submitted that the Courts statement is of doubtful validity for the following reasons:

If the competition finds that it can avoid the potential infringement of a patent by making insubstantial changes to a product or process while achieving the same, or essentially the same result without going to the expense of truly "designing around" the patent, it is most likely this approach will be used. If anything, the nature of the decision would not encourage the exploration and ingenuity often necessary to

"design around" a given patent when that goal can be reached through the avenue of incorporation of trivial or insubstantial changes.

What is often overlooked is the cost and effort that a patentee or its licensee must expend to develop a market for a new or improved product or process in addition to developing the product or process itself. Inasmuch as most basic research-based inventions tend to be embryonic in nature the commitment by a university licensee must be substantial to accomplish both development goals. Under the C.A.F.C. decision, a potential competitor of the university licensee would have the opportunity to wait for the licensee to develop both the product or process licensed and the market for it, make insubstantial or trivial changes schooled by an examination of the prosecution history of the patent licensed, and enter the then known market without the development expenses required of the licensee. That capability would discourage, rather than encourage, a true effort to "design around." It would simply not be necessary. It would, therefore, discourage the exercise of creative ingenuity intended to be fostered by the U.S. patent system. It would also offer tantamount to a free license to foreign companies and countries to avail themselves of new technological concepts and entry into the marketplace in direct competition with U.S. industry at home and competitiveness in the global economy.

This reasoning comports with that of Judge Newman in her dissent where she states:

> The assumption that placing new technology in the public domain is always the optimum path to industrial growth is not supported by experience. Empirical studies have added rigor to the common sense knowledge that reduced profit opportunity affects the supply of capital to launch a new technology, and often the creation of the technology itself.

See Festo v. SMC, 2000 U.S. App. LEXIS 29979 (Fed. Cir. Nov. 29, 2000) (Newman, J., dissenting).

In the passage of the Bayh-Dole Act, Congress recognized that: 1.) Imagination and creativity are truly a national resource; 2.) The patent system is the vehicle that permits us to deliver that resource to the public; 3.) Placing the stewardship of the results of basic research in the hands of universities and small business is in the public interest; 4.) The existing federal patent policy was placing the nation in peril during a time when invention and innovation was becoming the preferred currency in foreign affairs.

The United States cannot afford the luxury of casting away its doctrine of equivalents on the mere hope of a gain from a copyist whose primary goal is to profit from someone else's work. For this cause, we again respectfully request this Honorable Court to reverse the decision of the Court of Appeals for the Federal Circuit.

III. THE DOCTRINE OF EQUIVALENTS IS VIRTUALLY ABOLISHED

The doctrine of equivalents allows a patent holder to enforce its patent against the maker of a product or process that does not fall within the literal scope of the patent claims, if the accused device or process infringes a patent holder's patent under the doctrine of equivalents. The patentee may recover if the accused device substantially performs substantially the same function in substantially the same way to achieve substantially the same result as the patented device or process. *Machine Co. v. Murphy*, 97 U.S. 120, 125 (1877). However, if the patentee is barred from complaining about the infringement under the doctrine of equivalents due to prosecution history estoppel, the infringer reaps a great windfall.

The purpose of the doctrine of equivalents is to prevent this type of fraud by proscribing the making, using or selling of a device that is essentially the same as the patented invention, but which does not fall within the literal scope of the patented

claims. The doctrine balances the public need to rely on the literal scope of the claims with the inherent limitation of claim language; it provides an equitable means by which courts may determine ". . . the degree to which it is necessary to depart from the [literal] meaning [of the patent claims] to reach a just result." *Royal Typewriter Co. v. Remington Rand, Inc.*, 168 F.2d 691, 692; 77 U.S.P.Q. 517 (2d Cir. 1948).

The doctrine of equivalents has been a venerable doctrine in the patent law of the United States from *Winans v. Denmead*, 56 U.S. 330 (1853), to *Warner-Jenkinson v. Hilton Davis*, 520 U.S. 17 (1997).

In *Winans*, the Court stated the doctrine as follows:

> Where form and substance are inseparable, it is enough to look at the form only. Where they are separable; where the whole substance of the invention may be copied in a different form, it is the duty of the courts and juries to look through the form for the substance of the invention—for that which entitled the inventor to his patent, and which the patent was designed to secure; where that is found, there is an infringement; and it is not a defence, that it is embodied in a form not described, and in terms claimed by the patentee.

Winans v. Denmead, 56 U.S. 330, 343 (1853). In 1997, this Court in *Warner-Jenkinson v. Hilton-Davis*, held that the doctrine of equivalents continues as a viable doctrine in U.S. patent law. *See Warner-Jenkinson*, 1997 U.S. LEXIS 1476, at *4.

Equivalence is an equitable concept, having no definable boundary. The sole task of the courts should be to decide whether or not the accused device falls within this intangible area of equivalence as the courts are seeking the most equitable outcome based on the facts of each case. A generic rule such as that articulated by the C.A.F.C. in *Festo*, puts the doctrine of equivalents in an unusable strait jacket.

The C.A.F.C.'s rule in *Festo* has greatly reduced the availability of the doctrine of equivalents to do justice to existing patents and has opened the door to unchecked fraud in the marketplace by taking away the power of courts to do justice under the rule of *Winans* and *Warner-Jenkinson*.

IV. FESTO HAS SHAKEN THE FOUNDATIONS OF PATENT LAW

Numerous questions are raised and left unanswered by the C.A.F.C. *Festo* decision. The impact on prior cases which relied upon *Warner-Jenkinson* but which are unlitigated poses serious problems for the patent owners: Will *Festo* overrule *Warner-Jenkinson*? Upon what law should the litigant rely? Upon what law should applicants rely? Should the U.S. Patent Office revamp or revise its rules and regulations to conform to Festo? Should the Patent Office continue to rely upon the Supreme Court ruling in *Warner-Jenkinson*? Should applicants in prosecuting patent applications adapt to the C.A.F.C. rule on prosecution history estoppel?

Should an applicant assume that every claim narrowing amendment, whether voluntary or involuntary, made to comply with any provision of the patent act (whether the extent of narrowing is required or not), automatically create prosecution history estoppel regardless of the reason for the amendment? The C.A.F.C. in *Festo* answered this question in the affirmative. *See Festo*, 2000 U.S. App. LEXIS 29979, at *11.

However, the U.S. Supreme Court answers this question in the negative. The Court ruled in *Warner-Jenkinson* that "where the reason for the change was not related to avoiding the prior art, the change may introduce a new element, but it does not necessarily preclude infringement by equivalents of that element"? *Warner-Jenkinson*, 1997 U.S. LEXIS 1476, at*13. There is an urgent need for clarification between these two competing holdings.

We urge this Court therefore to overrule the United States Court of Appeals for the Federal Circuit to settle these questions, for without this Court's guidance, the current state of the law could cause a waste of enormous resources.

The economics of acquiring, maintaining and defending a patent portfolio will greatly increase under the new C.A.F.C. rules on prosecution history estoppel and the doctrine of equivalents. It will now require all prudent inventors to: 1.) File patents of narrower scope; 2.) This will lead to more patent filings; 3.) Applicants will be less compromising with examiner proposed language; 4.) Perhaps more appeal proceedings from PTO prosecution rejections will ensue; 5.) Fewer applications will be filed by the research community overall to protect basic research results due to lack of discretionary funds with which to pay the increased costs; 6.) Fewer applications will mean less opportunity for the public to benefit from the results of basic research (most of which is funded with taxpayer dollars); 7.) The Patent Office would expand its practice of issuing adjacent patents, which are so close to issued patents that they basically co-opt the core invention of the issued patent.

Festo fails to aid in protection of basic research/inventions at a time when inventions are the preferred currency of foreign affairs. *See* H. Bremer. *University Technology Transfer Evolution and Revolution*, (manuscript on file with author and COUNCIL ON GOVERNMENTAL RELATIONS (COGR) for their 50th Anniversary).

Again, we urge this Honorable Court to overrule the United States Court of Appeals for the Federal Circuit in the case at bar.

CONCLUSION

Given the diversity of opinions expressed among the judges on the C.A.F.C., the success or failure of a litigant before that tribunal is not predictable given the uncertain state of the law.

Rights of litigants and the outcome of cases should not vary dependent upon the views of a particular jurist, but rather upon clearly articulated principles of law as established by the United States Supreme Court or the United States Congress.

For all of the foregoing reasons, the *amicus curiae* respectfully prays that this Honorable Court overrule the United States Court of Appeals for the Federal Circuit in the case at bar.

Respectfully submitted,

JAMES PHILLIP CHANDLER
Counsel of Record
THE CHANDLER LAW FIRM CHARTERED
Suite 300
1815 Pennsylvania Ave., NW
Washington, D.C. 20006
(202) 296-8484
Counsel for Amicus Curiae

August 31, 2001

AUG 31 2001

(33)

Supreme Court, U.S.
FILED
AUG 31 2001

No. 00-1543

IN THE

Supreme Court of the United States

FESTO CORPORATION,
Petitioner,

v.

SHOKETSU KINZOKU KOGYO KABUSHIKI CO., LTD., A/K/A SMC CORPORATION AND SMC PNEUMATICS, INC.,
Respondents.

On Writ of Certiorari to the United States Court of Appeals for the Federal Circuit

---

BRIEF FOR AMICUS CURIAE IN SUPPORT OF NEITHER PARTY ON BEHALF OF THE PATENT, TRADEMARK, & COPYRIGHT SECTION OF THE BAR ASSOCIATION OF THE DISTRICT OF COLUMBIA

William P. Atkins
Pillsbury Winthrop, LLP
1600 Tysons Boulevard
McLean, Virginia 22102
(703) 905-2000

Attorney for *Amicus Curiae*

20 pp

TABLE OF CONTENTS

Page

TABLE OF CONTENTS i
TABLE OF AUTHORITIES ii
STATEMENT OF AMICUS CURIAE 1
SUMMARY OF THE ARGUMENT 2
ARGUMENT 3
1. The Patent Claims At Issue 3
2. *Festo* v. *Warner-Jenkinson* – PHE Differences 6
3. Post-*Festo* Cases Evidence The Problem 7
4. What Is An "Element" And A "Limitation" – A History 8
5. PHE Applies To What and Why 14
6. Conclusion 15

TABLE OF AUTHORITIES

Page

Cases

ACLARA Biosciences, Inc. v. Caliper Technologies Corp.,
125 F. Supp. 2d 391 (N.D. Cal. 2000) 8, 10, 14, 15

Brookes v. Fiske,
56 U.S. (15 How.) 211 (1853).....9

Creo Products Inc. v. Presstek, Inc.,
2001 WL 637397 (D. Del. 2001) 8, 10, 15

Dawn Equip. Co. v. Kentucky Farms Inc.,
140 F.3d 1009 (Fed. Cir. 1998).....13

Eames v. Godfrey,
68 U.S. (1 Wall.) 78 (1864).....9

Ethicon Endo-Surgery, Inc. v. United States Surgical Corp.,
149 F.3d 1309 (Fed. Cir. 1998).....13

Evans v. Eaton,
16 U.S. (1 Wheat.) 454 (1818).....*9*

Festo Corp. v. Shoketsu Kinzoku Kogyo Kabushiki Co.,
234 F.3d 558 (Fed. Cir. 2000)..... passim

Goodyear Dental Vulcanite Co. v. Davis,
102 U.S. 222 (1880).....10

Graver Tank & Mfg. Co. v. Linde Air Prods. Co.,
329 U.S. 605 (1950).....14

Lemelson v. United States,
752 F.2d 1538 (1985).....12

Lockheed Martin Corp.,
234 F.3d 1314 (Fed. Cir. 2001).....7, 14, 15

Pennwalt Corp. v. Durand-Wayland, Inc.,
833 F.2d 931 (1987).....13

Perkin-Elmer Corp. v. Westinghouse Electric Corp.,
822 F.2d 1528 (Fed Cir. 1987).....12

Prouty v. Ruggles, 41 U.S. (1 Pet.) 336 (1842).....9

Radio Steel & Mfg. Co. v. MTD Prods., Inc.,
731 F.2d 840 (1984).....12

Sargent v. Hall Safe & Lock Co.,
114 U.S. 63 (1885).....11

Sexant Avionique, S.A. v. Analog Devices, Inc.,
172 F.3d 817 (Fed. Cir. 1999).....13

Silsby v. Foote,
55 U.S. (1 How.) 218 (1852).....9

Union Water-Meter Co. v. Desper,
101 U.S. (11 Otto) 332 (1879) 10

Vance v. Campbell,
66 U.S. (1 Black) 427 (1862).....10, 13

Warner-Jenkinson Co. v. Hilton Davis Chem. Co.,
520 U.S. 17 (1997).....6

Wollensak v. Sargent,
151 U.S. 221 (1894).....11

Statutes

35 U.S.C. § 112, third paragraph 12
35 U.S.C. § 112, fourth paragraph 11, 12
35 U.S.C. § 112, fifth paragraph 12
34 U.S. C § 112, sixth paragraph 11
Patent Act, ch. 7, § 2, 1 Stat. 109-12 (1790).....9
Patent Act, ch. 11, § 3, 1 Stat. 318-23, (1793).....9
Patent Act, Ch. 230, § 26, 16 Stat. 198-217 (1870).....10
Patent Act, ch. 357, § 6, 5 Stat. 117 (1836) 9
Pub. L. No. 89-83 79 Stat. 259 (1965).....11
Sup. Ct. R. 37.6.....1

STATEMENT OF AMICUS CURIAE

The Bar Association of the District of Columbia is a non-profit organization that has a Patent, Trademark, & Copyright Section which monitors intellectual property developments in both the law and practice. This section includes members of the bar who specialize in intellectual property law, with an emphasis on patent law. Members frequently represent patent applicants, patent owners, and accused patent infringers in various matters, and are concerned with the use and effect of prosecution history estoppel on claim interpretation in patent infringement.

Other than an interest in seeking consistent, precise, and well-founded interpretations of patent law, the Patent, Trademark & Copyright Section of the Bar Association of the District of Columbia supports neither party, and respectfully requests that this Court consider the arguments contained herein.[1]

---

[1] None of the parties or their counsel has contributed either substantively or monetarily to the preparation of this brief. Only the Bar Association of the District of Columbia and its members have made a monetary contribution to the creation, preparation, and submission of this brief. Written consent to the filing of this brief has been granted by all parties and is filed herewith. Pursuant to Sup. Ct. R. 37.6, the author also acknowledges and appreciates the assistance of Daniel E. Yonan, Dale S. Lazar, Kevin T. Kramer, and Emily T. Bell.

SUMMARY OF ARGUMENT

If an applicant amends a patent claim by adding the term "red" to modify the term "wagon," for reasons relating to patentability, is the range of equivalents for wagons barred or just the range of equivalents for the color of the wagons? In other words, to what claim terms does prosecution history estoppel ("PHE") apply?

In the Stoll patent at issue in this case, the sealing rings were amended from sealing "means" to sealing "rings," both with modifying claim terms. Should PHE apply to the term "sealing rings," or just the term "rings" or to "sealing rings" and its modifying claim terms?

The *Festo* decision held that the doctrine of equivalents is completely barred on "limitations" which is then defined as merely" claim language."[2] Patent claim terms have been historically "elements" and "limitations." This lack of clarity, as to what claim terms should be subjected to PHE, has become the focus of litigants and, even the Federal Circuit, as courts attempt the difficult task of applying *Festo's* PHE analysis to various patent claim terms. The bright line objective of *Festo* has unfortunately created an entirely new battleground – which claim terms will be subjected to PHE and why.

This brief attempts to guide the Court in resolving this issue because clarification of the scope and extent of PHE will help the resolution of all doctrine of equivalents cases that are based upon PHE. At the very least, the consistent use of precise nomenclature will provide clarity as to the scope and extent of PHE so that, in turn, the scope and

[2] *Festo Corp. v. Shoketsu Kinzoku Kogyo Kabushiki Co.*, 234 F.3d 558, 569 (Fed. Cir. 2000) (en banc).

extent of equivalents and infringement under the doctrine of equivalents can more readily be evaluated.

ARGUMENT

The objective of this brief is to help the Court appreciate the inherent problems in the use of imprecise nomenclature for claim terms during an analysis of PHE. This *amicus* brief looks first to one of the "elements" found in one of the claims at issue and then, using the historical guidance of caselaw and statutes, attempts to provide a framework for the Court's consideration of the scope and extent of the application of PHE on patent claims.

1. The Patent Claims At Issue

The following table compares inventor Stoll's originally filed claims 1 and 4 with issued claim 1. The Federal Circuit determined that PHE applied to both the magnetizable sleeve and the sealing ring elements but the focus of the following comparison is the "sealing ring element" referred to in the *Festo* decision.[3]

[3] *Festo*, 234 F.3d at 587-91.

Original Claim 1	Issued Claim 1(Claim 13)
a piston which is slidable in said tubular part and which has sealing means at each end for siping [sic wiping] engagement with an internal surface of the tubular part and so as to form a seal for the pressure medium[4]	said piston further including plural guide ring means encircling said piston body and slidingly engaging said internal wall and first sealing rings located axially outside said guide rings for wiping said internal wall as said piston moves along said tube to thereby cause any impurities that may be present in said tube to be pushed along said tube so that said first annular magnets will be free of interference from said impurities[6]
Original Claim 4	
Wherein the sealing means of the piston comprise sealing rings and the piston is provided with sliding guide rings near the sealing rings.[5]	

The claim language "sealing rings" and the words following that term, in issued claim 1, can be parsed in many ways, but the pertinent terms include the following:

1. Sealing,
2. Rings,
3. Located axially outside said guide rings, and
4. For wiping said internal wall as said piston moves along said tube to thereby cause any impurities

[4] Originally filed claim 1 on page 11 of U.S. Patent Application No. 06/153,999, which matured into the Stoll patent.

[5] *Id.* at page 12.

[6] U.S. Patent No. 4,354,125.

that may be present in said tube to be pushed along said tube so that said first annular magnets will be free of interference from said impurities.

The first question in the *Festo* analysis is what was amended. The "sealing means" element in the originally filed claim 1 was a statutorily defined means-plus-function element under 35 U.S.C. § 112, sixth paragraph. Claims 1 and 4 from the original application were cancelled, however, and new claim 13 was submitted.

A review of the prosecution history reveals that three of the four terms were amended. The term "sealing" was not amended, but it was part of the change from "sealing means for . . ." to "sealing rings." The term "rings" was originally "means for . . .," and the *Festo* opinion speaks about the narrowing aspect of this term.[7] The term "located axially outside said guide rings" was newly added with the "guide rings" noted in original claim 4 as being "near the sealing rings." Finally, the genesis for the fourth term set forth above for cleaning impurities out of the tube, appears to be from the "wiping engagement" function in original claim 1. Thus, this language was also added to issued claim 1. Again, all of these claim terms were amended except "sealing."

With this in mind, does the PHE apply to "sealing rings" alone and not the claim term "sealing?" This is a subtle, but critical distinction because it determines the very foundation for both the doctrine of equivalents and any infringement analysis that follows. Consider the effect of having the doctrine of equivalents available for the term "sealing" but not for the term "rings." If "rings" had no

[7] *Festo*, 234 F.3d at 589 ("a claim amendment which replaces means-plus-function language with language reciting the corresponding structure narrows the scope of the claim"). "Rings" was also recited in original dependent claim 4.

equivalents, the accused infringer with one ring instead of two could forcefully argue that one is not equal to two and that a single ring can never be an equivalent of the claimed "rings."

2. *Festo* v. *Warner-Jenkinson* – PHE Differences

If an amendment was voluntary and related to patentability, as it was with *Warner-Jenkinson's* addition of a lower end range of 6.0 pH to its claim, it "would bar the application of the doctrine of equivalents as to that [amended] element."[8] In the *Festo* case, however, the Federal Circuit held that the application of the doctrine of equivalents is completely barred as to the amended claim limitation, where a limitation was defined only as "claim language."[9] The difference in terminology used by this Court and the Federal Circuit is symptomatic of the confusion regarding the proper scope and extent of PHE. Furthermore, this sweeping change of terminology by the Federal Circuit to patent claims only having "limitations" and not "elements" is problematic because there is a long and confused history of both terms.

Cases decided after the Federal Circuit's *Festo* decision provide ample evidence of the mischief caused by not precisely articulating what should be included in the scope and extent of the PHE, and what should not.

---

[8] *Warner-Jenkinson Co. v. Hilton Davis Chem. Co.*, 520 U.S. 17, 33 (1997) (emphasis added).

[9] *Festo*, 234 F.2d at 564 n.1. In the *Festo en banc* decision, the court decided that it is "preferable to use the term 'limitation' when referring to claim language and the term 'element' when referring to the accused device," but "because the en banc questions use the term 'element,'" the Federal Circuit used the term "element" instead of "limitation" in its decision.

3. Post-*Festo* Cases Evidence The Problem

Consider the Federal Circuit's own foray into this post-*Festo* area in the recent *Lockheed* case.[10] In the prosecution of the application that led to issuance of the patent-in-suit in *Lockheed*, the applicant twice amended claim terms in phrase "b" of the original application.

> The pertinent language of [originally filed] limitation [b] stated, 'means for rotating said wheel in accordance with a predetermined sinusoidal variation.' . . . the applicant amended limitation [b] to state, 'means for rotating said wheel in accordance with a predetermined *rate schedule which varies sinusoidally over the orbit.*' The applicant again amended the claim by adding the phrase 'at the orbital frequency of the satellite.'[11]

Applying PHE under the *Festo* "limitation" analysis, the Federal Circuit held that "prosecution history estoppel [bars] the application of the doctrine of equivalents' to limitation [b]."[12] The Federal Circuit determined that the "first amendment wholly replaced the phrase 'sinusoidal variation'" and therefore held that this "amendment illustrates that the entire limitation of limitation [b] was changed, not that a completely separate limitation, unrelated to sinusoidal variation, was added."[13] A more precise analysis could be that "sinusoidal variation" was a limitation

---

[10] *Lockheed Martin Corp. v. Space Systems/Loral, Inc.*, 249 F.3d 1314 (Fed. Cir. 2001)(en banc request denied).

[11] *Id.* at 1326 (note that the court adopted the use of the term limitation instead of element in accordance with the *Festo* decision) (quoting *Festo*, 234 F.3d at 586).

[12] *Id.* at 1327 (quoting *Festo*, 234 F.3d at 586).

[13] *Id.* at 1327.

modifying the means-plus-function element of "means for rotating said wheel" and then dealt with as a separate and distinct claim term. Alternatively, because it would be a "limitation" that modifies an "element," PHE applicable to it could affect the modified element. The "sinusoidal variation" could also be considered a separate element and therefore, PHE applicable to it does not affect the doctrine of equivalents analysis of the "means for rotating said wheel."

Further examples of courts wrestling with the application of PHE to claim terms after *Festo* include the *ACLARA* and *Creo* cases.[14] In *ACLARA*, one element was found to have three limitations, and the applicant did not amend the limitation at issue. It was decided that PHE could not apply to that unamended limitation.[15] Thus, the court took a more limited approach regarding the scope of PHE based on a more precise parsing of the claim terms. In *Creo*, the court stated that "[r]ather than woodenly applying *Festo*, the court will adopt the more nuanced approach" of *ACLARA*.[16] "Simply put, the issue in this [*Creo*] case is . . . whether the *Festo* bar covers implicit changes in a limitation."[17] This is the very issue that can be corrected with considered forethought.

4. What Is An "Element" And A "Limitation" – A History

An understanding of the historical treatment and terminology applied to claim terms may provide some guidance to the Court in considering the question raised by

---

[14] *ACLARA Biosciences, Inc. v. Caliper Technologies Corp.*, 125 F. Supp. 2d 391 (N.D. Cal. 2000); *Creo Products Inc. v. Presstek, Inc.*, 2001 WL 637397 (D. Del. 2001).

[15] *ACLARA*, 125 F. Supp. 2d at 402.

[16] *Creo*, 2001 WL 637397, at *9.

[17] *Id.* at *8.

this brief and the facts of Festo. Throughout the history of patent law in the United States, this Court, the lower courts, and Congress have used the words "elements" and "limitations" to refer to terms in patent claims.

Our research has taken us from the Patent Act of 1790 to a line of post-*Festo* cases. Beginning in 1790, a patent was required to have merely a written description of the invention.[18] Three years later, the written description was required to include "full, clear and exact terms ... [to] enable any person skilled in the art ... to make, compound, and use the same."[19] In 1818, this Court introduced, but did not adopt, the term "elements."[20] In 1836, the law was amended to require that the written description of a patent include claims,[21] and those claims were composed of all the parts mentioned in the combination. These "parts"[22] of a

---

[18] Patent Act, ch. 7, § 2, 1 Stat. 109-12 (1790) (a description that was so particular "as not only to distinguish the invention or discovery from other things before known and used, but also to enable a workman or other person skilled in the art to manufacture" the invention).

[19] Patent Act, ch. 11, § 3, 1 Stat. 318-23 (1793).

[20] *Evans v. Eaton*, 16 U.S. (1 Wheat.) 454, 485 (1818) ("[t]he grant [of the patent] is not for the parts [of the invention], because it is for the whole; not in their rudiments or *elements* ... but for the peculiar properties, the new and useful practical results from each machine, and the vast improvements from their combination in this art") (emphasis added).

[21] Patent Act, ch. 357, § 6, 5 Stat. 117 (1836) ("[inventor must] particularly specify and point out the part, improvement, or combination, which he claims as his own invention or discovery").

[22] *Silsby v. Foote*, 55 U.S. (1 How.) 218, 224 (1852); *Prouty v. Ruggles*, 41 U.S. (1 Pet.) 336, 341 (1842) ("this combination, composed of all the *parts* mentioned in the specification, and arranged with reference to each other, and to other *parts* of the plough, in the manner therein described is stated to be the improvement, and is the thing patented") (emphasis added); *Brookes v. Fiske*, 56 U.S. (1 How.) 211, 220 (1853) ("[t]o infringe, Norcross must use all the *parts* of Woodworth's combination") (emphasis added); *Eames v. Godfrey*, 68

claim were broad portions of the combinations.[23] In 1862, this Court referred to a distinct, specific part of a combination as an "element" and, if one "element" was surrendered, "the thing claimed disappears."[24] In 1870, the statutory claiming requirement was refined to require that an applicant "particularly point out and distinctly *claim* the part, improvement, or combination which he claimed as his invention or discovery."[25]

In 1879, this Court confirmed that a patent claim is comprised of "elements" or "parts."[26] The next year, this Court found that there were "necessary elements of the invention."[27]

Our research indicates that the first time the word "limitation" was applied to a patent claim term was by this Court in 1885. In that year, in the *Sargent* case, this Court

---

U.S. (1 Wall.) 78, 79 (1864) ("that there is no infringement of a patent which claims mechanical powers in combination unless all the *parts* have been substantially used") (emphasis added); *Union Water-Meter Co. v. Desper*, 101 U.S. 332, 335-37 (1879) ("[i]t is a well-known doctrine of patent law, that the claim of a combination is not infringed if any of the material *parts* of the combination are omitted ... Our law requires the patentee to specify particularly what he claims to be new, and if he claims a combination of certain *elements* or *parts*, we cannot declare that any one of these *elements* is immaterial. The patentee makes them all material by the restricted form of his claim") (emphasis added).

[23] *Union Water-Meter Co. v. Desper*, 101 U.S. 332 (1879).

[24] *Vance v. Campbell*, 66 U.S. (1 Black) 427, 429 (1862) ("[i]f one of the elements is given up, the thing claimed disappears").

[25] Patent Act, Ch. 230, § 26, 16 Stat. 198-217 (1870).

[26] *Union Water-Meter Co. v. Desper.*, 101 U.S. 332, 337 (1879) ("Our law requires the patentee to specify particularly what he claims to be new, and if he claims a combination of certain elements or parts, we cannot declare that any one of these elements is immaterial").

[27] *Goodyear Dental Vulcanite Co. v. Davis*, 102 U.S. 222, 224 (1880) ("[i]t is therefore essential to a correct determination of this case to consider what was the material, made by the patentee [sic] an element of his invention").

confirmed that patent claims included "elements" but, for the first time, opined on "limitations" within patent claims.[28] In 1894, this Court provided that a claim containing references to the elements included could not be broadened to include additional elements.[29]

The understanding that claims were comprised of "elements" was reinforced by the Patent Act of 1952, which stated in part, "an element in a claim for a combination may be expressed as a means or step for performing a specified function."[30] This statute allowed any element to be expressed in means-plus-function type language.

Contrary to the "element" claim term reference in the 1952 Patent Act, the 1965 Patent Act included the undefined word "limitations," and today the statute continues as 35 U.S.C. § 112, fourth paragraph which states in pertinent part: "A claim in dependent form shall be construed to incorporate by reference all the *limitations* of the claim to which it refers)".[31] The legislative history reveals only that the word "limitations" was added to the patent statute in the context of defining independent and dependent claims.[32] The 1975 Patent Act amended 35 U.S.C. § 112 yet again and included more language regarding limitations and involved multiple

---

[28] *Sargent v. Hall Safe & Lock Co.*, 114 U.S. 63, 86-86 (1885).

[29] *See Wollensak v. Sargent*, 151 U.S. 221, 226-27 (1894) (a specific combination claim, containing letters or reference to the elements included, cannot be broadened to include additional elements).

[30] "An element in a claim for a combination may be expressed as a means or step for performing a specified function without the recital of structure, material, or acts in support thereof, and such claim shall be construed to cover the corresponding structure, material, or acts described in the specification and equivalents thereof." 35 U.S.C. § 112 sixth paragraph.

[31] 35 U.S.C. § 112 paragraph 4 (emphasis added).

[32] Pub. L. No. 89-83, 79 Stat. 259 (1965).

dependent claims.[33] The addition of these two limitations-containing paragraphs to § 112 stand in stark contrast to paragraph 6 of the 1952 Act, which contains the element term discussed above.

In 1983, the Federal Circuit remarked that "[f]or a patent claim to have been anticipated under 35 U.S.C. § 102, all the *elements* in the claim … must have been disclosed in a single prior art reference or device."[34] In 1985, the Federal Circuit again emphasized "elements" in infringement analysis, providing that "[i]t is also well settled that each *element* of a claim is material and essential, and that in order for a court to find infringement, the plaintiff must show the presence of every *element* or its substantial equivalent in the accused device."[35] In 1987, the Federal Circuit again embraced elements as components of a device (either in the accused device or embodied by the invention).[36] That same year, however, the Federal Circuit also used "limitations"

[33] 35 U.S.C. § 112, third paragraph ("A claim may be written in independent or, if the nature of the case admits, in dependent or multiple dependent form"); 35 U.S.C. § 112, fourth paragraph ("Subject to the following paragraph, a claim in dependent form shall contain a reference to a claim previously set forth and then specify a further *limitation* of the subject matter claimed. A claim in dependent form shall be construed to incorporate by reference all the *limitations* of the claim to which is refers"); 35 U.S.C. § 112, fifth paragraph ("A claim in multiple dependent form shall contain a reference, in the alternative only, to more than one previously set forth and then specify a further *limitation* of the subject matter claimed. A multiple dependent claim shall not serve as a basis for any other multiple dependent claim. A multiple dependent claim shall be construed to incorporate by reference all the *limitations* of the particular claim in *relation to which it is being considered*") (emphasis added).

[34] *Radio Steel & Mfg. Co. v. MTD Prods., Inc.*, 731 F.2d 840, 845 (1984) (emphasis added).

[35] *Lemelson v. United States*, 752 F.2d 1538, 1551 (1985).

[36] *Perkin-Elmer Corp. v. Westinghouse Electric Corp.*, 822 F.2d 1528, 1533 n.9 (Fed. Cir. 1987) (emphasis added).

when referring to what was set forth in the claims.[37] And in 1999, the Federal Circuit opined that "an accused device that does not literally infringe a claim may still infringe under the doctrine of equivalents if each limitation of the claim is met in the accused device either literally or equivalently."[38]

The understanding that claims consist of elements is codified in 37 C.F.R. § 1.75(i), which states: "[A] claim sets forth a series of elements, each element or step of the claim should be separated by a line indentation."

"Elements" have been a part of claims since at least 1862 and continued to be so until the *Festo* case changed the nomenclature *en banc* and brought into sharp focus the question of which claim terms are subjected to PHE.[39] Although the courts and Congress have used different terms to refer to terms in a claim, the Federal Circuit's pronouncement in *Festo* has only further muddied the proverbial patent waters. Against the backdrop of *Festo's* complete bar rule against the doctrine of equivalents, a change in nomenclature only further complicates the analysis of whether and to what extent PHE bars the application of the doctrine of equivalents to a particular term.

[37] *See Pennwalt Corp. v. Durand-Wayland, Inc.*, 833 F.2d 931, 933-35 (1987).

[38] *Sexant Avionique, S.A. v. Analog Devices, Inc.*, 172 F.3d 817, 826 (Fed. Cir. 1999) (emphasis added); *Ethicon Endo-Surgery, Inc. v. United States Surgical Corp.*, 149 F.3d 1309, n.*9. (Fed. Cir. 1998) ("we have stated that 'the All Elements rule might better be called the All Limitations rule. It will be referred to as such throughout the remainder of this opinion'").

[39] *Vance v. Campbell*, 66 U.S. (1 Black) 427, 429 (1862). There is one previous case that mentioned that claim terms were only limitations, but the *Festo* decision was *en banc*. *See Dawn Equip. Co. v. Kentucky Farms Inc.*, 140 F.3d 1009, 1014 n.1 (Fed. Cir. 1998).

5. PHE Applies To What and Why

When determining the scope and extent of PHE, as it applies to amended claim terms, there are two options. PHE can apply to either the claim term that has been amended or, alternatively, to the claim term that has been amended as well as some scope of related claim terms.[40] If PHE is found to apply to only the claim term that has been amended, the doctrine of equivalents will continue to have a viable role in patent litigation, as evidenced by the *ACLARA* case.[41] On the other hand, if PHE is applied to the amended claim term and all related terms under the complete bar of *Festo*, as in the *Lockheed* case, the doctrine of equivalents will likely cease to exist as a means to thwart the "unscrupulous copyist."[42] The convoluted, historical descriptions of "element" and "limitation" only serve to further exacerbate this problem that difficulty. For this reason, we ask the Court to clarify the scope and extent of the applicability of PHE to patent claim terms and provide meaningful definitions as to what elements and limitations are.

[40] If PHE is found to apply to a claim term that has been amended and a related claim term, then the amended term is likely a limitation and the related claim term is likely an element. If, on the other hand, PHE is limited to only the amended claim term, the amended claim term is likely an element.

[41] *ACLARA*, 125 F. Supp. 2d 391 (N.D. Cal. 2000).

[42] *Lockheed*, 249 F.3d 1314 (Fed. Cir. 2001); *Graver Tank & Mfg. Co. v. Linde Air Prods. Co.*, 329 U.S. 605, 607-08 (1950).

6. Conclusion

The Patent, Trademark, & Copyright Section of the Bar Association of D.C. respectfully submits that an opinion that comments on which claim terms will be affected by prosecution history estoppel would prevent litigants and judges from spending valuable resources and time on tedious, difficult, time-consuming, and expensive claim term analysis that produces an uncertain result due to a lack of guidance. Evidence of this already exists with the aforementioned post-*Festo* cases of *Lockheed, ACLARA,* and *Creo* cases.[43]

[43] *Lockheed Martin Corp. v. Space Systems/Loral Inc.*, 249 F.3d 1314 (Fed. Cir. 2001); *ACLARA Biosciences, Inc. v. Caliper Technologies Corp.*, 125 F. Supp. 2d 391 (N.D. Cal. 2000); *Creo Products Inc. v. Presstek, Inc.*, 2001 WL 637397 (D. Del. 2001).

Respectfully submitted,

PATENT, TRADEMARK, &
COPYRIGHT SECTION
OF THE
BAR ASSOCIATION OF THE
DISTRICT OF COLUMBIA
William P. Atkins
Counsel of Record
Pillsbury Winthrop, LLP
1600 Tysons Boulevard
McLean, Virginia 22102

Counsel for *Amicus Curiae*
Patent, Trademark, & Copyright
Section of the Bar Association
of the District of Columbia

AUG 31 2001

(34)

No. 00-1543

Supreme Court, U.S.
FILED
AUG 31 2001
CLERK

In The

SUPREME COURT OF THE UNITED STATES

FESTO CORPORATION

Petitioner,

v.

SHOKETSU KINZOKU KOGYO
KABUSHIKI CO., LTD., a/k/a
SMC Corp. and SMC Pneumatics, Inc.,

Respondents.

ON WRIT OF CERTIORARI TO THE UNITED STATES COURT OF APPEALS FOR THE FEDERAL CIRCUIT

BRIEF OF THE AMERICAN BAR ASSOCIATION AS AMICUS CURIAE IN SUPPORT OF PETITIONER

Robert E. Hirshon*
President
American Bar Association
750 N. Lake Shore Drive
Chicago, IL 60611
(312) 988-5000
E. Anthony Figg
Minaksi Bhatt
Robert H. Cameron
Counsel for Amicus Curiae
**Counsel of Record*

35 pp

QUESTION PRESENTED

Whether a finding of prosecution history estoppel completely bars application of the doctrine of equivalents.

TABLE OF CONTENTS

Page

QUESTION PRESENTED i

TABLE OF AUTHORITIES iv

STATEMENT OF INTEREST 1

SUMMARY OF ARGUMENT 2

ARGUMENT 3

I. BACKGROUND OF THE DOCTRINE OF EQUIVALENTS AND PROSECUTION HISTORY ESTOPPEL 3

II. THE "COMPLETE BAR" RULE CONFLICTS WITH THIS COURT'S DECISIONS 6

III. THE "COMPLETE BAR" RULE IS CONTRARY TO PUBLIC POLICY 10

A. THE "COMPLETE BAR" RULE ALL BUT ABOLISHES THE DOCTRINE OF EQUIVALENTS FOR MORE THAN 1.2 MILLION ISSUED PATENTS 10

B. THE "COMPLETE BAR" RULE WILL SUBSTANTIALLY AND UNDULY BURDEN PATENT PROSECUTION .. 16

1. The Decision Below Fails to Take into Account the Realities of Claim Drafting and Patent Prosecution 16

2. The Federal Circuit's New Rule Will Increase The Cost And Complexity of Patent Prosecution 19

C. THE FEDERAL CIRCUIT HAS UPSET THE BALANCE BETWEEN ENCOURAGING INNOVATION AND PROVIDING NOTICE TO THE PUBLIC OF THE SCOPE OF AN ISSUED PATENT 20

CONCLUSION 25

TABLE OF AUTHORITIES

Page(s)

Cases

Altech Controls Corp. v. EIL Instruments, Inc.,
No. 00-1216, 2001 U.S. App. LEXIS 8089
(Fed. Cir. May 2, 2001) 15

Control Res., Inc. v. Delta Elecs.,
133 F. Supp. 2d 121 (D. Mass 2001) 6, 12

Creo Products Inc. v. Dainippon Screen Mfg. Co., Ltd.,
No. 00-1536, 2001 U.S. App. LEXIS 9302
(Fed. Cir. May 14, 2001), *petition for cert. filed*,
70 U.S.L.W. 3130 (U.S. August 21, 2001) (No. 01-269) 15

Exhibit Supply Co. v. Ace Patents Corp.,
315 U.S. 126 (1942) 11

Graver Tank & Mfg. Co. v. Linde Air Prods. Co.,
339 U.S. 605 (1950) 3, 14, 21

Hilton Davis Chem. Co. v. Warner-Jenkinson Co.,
62 F.3d 1512 (Fed. Cir. 1995),
rev'd on other grounds, 520 U.S. 17 (1997) 20

Hughes Aircraft Co. v. United States,
140 F.3d 1470 (Fed. Cir. 1998) 11

Hughes Aircraft Co. v. United States,
717 F.2d 1351 (Fed. Cir. 1983) 9

Insituform Techs., Inc. v. Cat Contracting, Inc.,
161 F.3d 688 (Fed. Cir. 1998),
cert. denied, 526 U.S. 1018 (1999) 12, 13

Insituform Techs., Inc. v. Cat Contracting, Inc.,
99 F.3d 1098 (Fed. Cir. 1996),
cert. denied, 520 U.S. 1198 (1997) 12

Insituform Techs., Inc. v. Cat Contracting, Inc.,
No. 00-1005, 2001 U.S. App. LEXIS 4570
(Fed. Cir. March 26, 2001) 12, 13, 15

Litton Sys., Inc. v. Honeywell Inc.,
238 F.3d 1376 (Fed. Cir. 2001),
petition for cert. filed, 69 U.S.L.W. 3702
(U.S. April 23, 2001) (No. 00-1617) 15

Lockheed Martin Corp. v. Space Sys./Loral, Inc.,
249 F.3d 1314 (Fed. Cir. 2001) 12, 15

Mycogen Plant Science, Inc. v. Monsanto Co.,
252 F.3d 1306 (Fed. Cir. 2001) 15

Pennwalt Corp. v. Durand-Wayland, Inc.,
833 F.2d 931 (Fed. Cir. 1987) (en banc),
cert. denied, 485 U.S. 961, 1009 (1988) 5

Pharmacia & Upjohn Co. v. Mylan Pharms., Inc.,
170 F.3d 1373 (Fed. Cir. 1999) 5, 11

Pioneer Magnetics, Inc. v. Micro Linear Corp.,
238 F.3d 1341 (Fed. Cir. 2001),
petition for cert. filed, 69 U.S.L.W. 3756
(U.S. May 23, 2001) (No. 00-1765) 15

Semitool, Inc. v. Novellus Sys., Inc.,
No. 00-1375, 2001 U.S. App. LEXIS 11986
(Fed. Cir. June 8, 2001) 15

Warner-Jenkinson Co. v. Hilton Davis
Chem. Co., 520 U.S. 17 (1997) 4, 5, 7-9, 11

Wilson Sporting Goods Co. v. David Geoffrey
& Assocs., 904 F.2d 677 (Fed. Cir. 1990),
cert. denied, 498 U.S. 992 (1990) 5

Statutes

35 U.S.C. § 112 16

35 U.S.C. §§ 102 and 103 16

Other Materials

Atkinson, William M., et al., *Was* Festo
Really Necessary?, 83 J. Pat. & Trademark
Off. Soc'y 111 (Feb. 2001) 20

Ayers, Peter J., *Federal Circuit's* Festo *is*
Unfriendly Toward Patent Rights,
Texas Lawyer, Jan. 8, 2001, at 53 16

Besen, Stanley M. & Leo J. Raskind,
An Introduction to the Law and Economics
of Intellectual Property, 5 J. Econ. Perspectives 3
(Winter 1991) 23

Fehlner, Paul F., *A New 'Biohazard' for*
Patent Applicants: Broad Biotechnology
Patent Claims, The Metropolitan Corporate
Counsel, Mar. 2001, at 4 16

Grady, Mark F. & Jay I. Alexander,
Patent Law and Rent Dissipation,
78 Va. L. Rev. 305 (Feb. 1992) 22

Gressel, Gerry, *Claim Drafting and Claim*
Amendment to Reduce the Festo *Effect*,
Intell. Prop. Today, Apr. 2001, at 24 17

Hanish, Marc S. & Adrienne Yeung,
Patent Practitioners Beware: The Federal
Circuit Releases a Manifesto,
9 Nevada Lawyer 18 (Mar. 2001) 14, 19

James, William, *Ensuring Broad Claim*
Coverage After Festo, *The Computer &*
Internet Lawyer, May 2001, at 13 10

Kitch, Edmund W., *The Nature and*
Function of the Patent System, 20
J.L. & Econ. 265 (1977) 22

Koffs, Steven E., *What's Left of the*
Doctrine of Equivalents?, The Legal
Intelligencer, Jan. 4, 2001, at 5 19

Matutes, Carmen, et al., *Optimal Patent*
Design and Diffusion of Innovations,
27 RAND J. Econ. 60 (Spring 1996) 21

Merges, Robert P. & Richard R. Nelson,
On the Complex Economics of Patent Scope,
90 Colum. L. Rev. 839 (May 1990) 13

Otterstedt, Paul J., *Unwrapping File Wrapper Estoppel in the Federal Circuit*,
67 St. John's L. Rev. 405 (Spring 1993) 20

Plager, S. Jay, *Challenges for Intellectual Property Law in the Twenty-First Century: Indeterminacy and Other Problems*,
2001 U. Ill. L. Rev. 69 (2001) 18, 19

Rose, Bruce J., et al., *The Value of Quality Patent Preparation and Prosecution Increases under* Festo, 8 Elec. Banking L. and
Com. Rep. 26 (Feb. 2001) 17

Rose, Simone A., *Patent "Monopolyphobia": A Means of Extinguishing the Fountainhead?*,
49 Case W. Res. L. Rev. 509 (Spring 1999) 22

Scotchmer, Suzanne, *Standing on the Shoulders of Giants: Cumulative Research and the Patent Law*, 5 J. Econ. Perspectives 29
(Winter 1991) 21

Wasleff, John A., et al., Festo *Opens the Door*,
Nat'l. L.J., Feb. 5, 2001, at C1 13

Wegner, Harold C., *Equitable Equivalents: Weighing the Equities to Determine Patent Infringement in Biotechnology and Other Emerging Technologies*, 18 Rutgers Computer
& Tech. L.J. 1 (1992) 3, 22, 24

Wolff, Kevin A., et al., *The Unspoken Loss in Shareholder Value: Patent Rights Take a Hit*,
Mealey's Litig. Rep. Intell. Prop., Apr. 2, 2001,
at 41 14

STATEMENT OF INTEREST

The American Bar Association ("ABA"), with more than 400,000 members, is the leading national membership organization of the legal profession. Its members come from each of the fifty states, the District of Columbia, and the U.S. territories. Membership is voluntary and includes attorneys in private practice, government service, corporate law departments and public interest organizations, as well as legislators, law professors, law students, and non-lawyer associates in related fields.[1] The ABA's Section of Intellectual Property Law is the largest organization of intellectual property lawyers in the world, with more than 20,000 members. The Intellectual Property Law Section has contributed significantly to the development of the systems for the protection of intellectual property rights in the United States.

The ABA has consistently supported a strong patent system, recognizing the important incentives that it provides for technological progress. It has recognized that an important part of the patent system is a well-defined and consistently applied doctrine of equivalents.

---

[1] This brief is filed with the consent of both Petitioners and Respondent. Letters of consent have been filed with the Clerk. Pursuant to Rule 37.6, the ABA states that this brief has not been authored in whole or in part by counsel for a party and that no person or entity, other than *amicus*, its members, or its counsel, has made a monetary contribution to the preparation or submission of this brief. Neither this brief nor the decision to file it should be interpreted to reflect the views of any judicial member of the American Bar Association. No inference should be drawn that any member of the Judicial Division Council has participated in the adoption of or endorsement of the positions in this brief. This brief was not circulated to any member of the Judicial Division Council prior to filing.

In February, 2001, the ABA House of Delegates adopted the following resolution as ABA policy:

> RESOLVED, that the American Bar Association opposes in principle that an amendment to a patent claim shall necessarily operate as a bar as to all equivalents with respect to the amended language of the claim.

This brief is submitted in accordance with this policy and to assist in securing implementation of the principle that it supports.

SUMMARY OF ARGUMENT

The ABA respectfully submits that the Federal Circuit, in *Festo Corp. v. Shoketsu Kinzoku Kogyo Kabushiki Co.*, 234 F.3d 558, 576-77 (Fed. Cir. 2000), erred in its formulation of the so-called "complete bar" rule, precluding any reliance on the doctrine of equivalents with respect to a patent claim limitation that was the subject of a narrowing amendment made during prosecution for a reason relating to patentability. The "complete bar" rule is inconsistent with precedent of this Court. It also is contrary to sound public policy for at least the following reasons: First, the new rule all but abolishes the doctrine of equivalents for a large proportion of the more than 1.2 million unexpired patents, unfairly denying many patentees a scope of protection that they had every reason to expect and that they did not voluntarily relinquish to secure issuance of their patents. Second, the new rule places a nearly impossible burden on patent applicants and their counsel to draft and prosecute patent claims that achieve the broadest literal coverage to which they are entitled, while avoiding amendments that will result in forfeiture of all rights under the doctrine of equivalents. Third, the substantial erosion of

the patent right that will result from the new rule, coupled with the increased complexity and cost of patent application preparation and prosecution, will diminish the incentive that fuels innovation in this country. It will discourage use of the patent system and will encourage reliance on trade secret protection.

For these reasons, the ABA respectfully urges this Court to reject the "complete bar" rule in favor of a "flexible bar" rule.[2]

ARGUMENT

I.

BACKGROUND OF THE DOCTRINE OF EQUIVALENTS AND PROSECUTION HISTORY ESTOPPEL

The doctrine of equivalents has been an important part of the patent law of this country for more than one hundred years. Harold C. Wegner, *Equitable Equivalents: Weighing the Equities to Determine Patent Infringement in Biotechnology and Other Emerging Technologies*, 18 Rutgers Computer & Tech. L.J. 1, 7-8 (1992). This Court succinctly reiterated the rationale behind the doctrine in its 1950 decision in *Graver Tank & Mfg. Co. v. Linde Air Prods. Co.*, 339 U.S. 605, 607 (1950):

---

[2] The ABA takes no position on the issue of whether or not the Petitioner has met its burden of proving infringement of the patents in suit.

> [C]ourts have also recognized that to permit imitation of a patented invention which does not copy every literal detail would be to convert the protection of the patent grant into a hollow and useless thing. Such a limitation would leave room for -- indeed encourage -- the unscrupulous copyist to make unimportant and insubstantial changes and substitutions in the patent which, though adding nothing, would be enough to take the copied matter outside the claim, and hence outside the reach of law.

In applying the doctrine of equivalents, courts recognize the real-life difficulties of describing in words the precise boundaries of an invention or discovery. So the words are given leeway, and one who appropriates the invention, yet makes insubstantial changes to avoid the literal language of the patent claim, nevertheless is liable as an infringer. The constitutionally recognized incentive of the patent system is fortified--indeed, is made real rather than illusory--in no small part by the doctrine of equivalents. It is presumably for this reason that this Court recently declined a suggestion that it should abolish the doctrine altogether. *Warner-Jenkinson Co. v. Hilton Davis Chem. Co.*, 520 U.S. 17, 21 (1997).

It is fair to say, however, that the doctrine is subject to abuse. Once untethered from the literal claim language, patent holders are tempted to stretch their lawful right to exclude to unreasonable extremes. Competitors are forced to defend against expensive, protracted patent litigation based on theories of infringement that are not recognizable from the claim language or the patent specification. *Id.* at 28-29 ("We do, however, share the concern . . . that the doctrine of equivalents, as it has come to be applied since *Graver Tank*,

has taken on a life of its own, unbounded by the patent claims.").

To balance fairness to the patentee against certainty and reasonable public notice of the scope of the patent right, limits have been established on the application of the doctrine. These limits fall into three main categories. First, the scope of protection cannot be expanded so as to encompass subject matter that would have been unpatentable over the prior art. *Wilson Sporting Goods Co. v. David Geoffrey & Assocs.*, 904 F.2d 677, 683-85 (Fed. Cir. 1990), *cert. denied*, 498 U.S. 992 (1990). Second, if an element of the patent claim is omitted from the accused device or process and an equivalent element is not substituted for it, there can be no infringement under the doctrine of equivalents. *Warner-Jenkinson*, 520 U.S. at 31; *Pennwalt Corp. v. Durand-Wayland, Inc.*, 833 F.2d 931, 934 (Fed. Cir. 1987) (en banc), *cert. denied*, 485 U.S. 961, 1009 (1988). Third, the patentee may not recapture subject matter that was relinquished during patent prosecution to secure the grant of the patent. *Pharmacia & Upjohn Co. v. Mylan Pharms., Inc.*, 170 F.3d 1373, 1376 (Fed. Cir. 1999).

The last limitation, known as "prosecution history estoppel," and its effect on the scope of protection available to a patentee are issues presented by this case. Frustrated by what it perceived as an "unworkable" and unpredictable "flexible" approach in determining the range of permissible equivalents following an estoppel-creating amendment of a claim limitation, the Federal Circuit radically altered the landscape for patent owners, patent applicants, and the public. In a split decision that one district court has recently

characterized as "jarring,"[3] the Federal Circuit announced its "complete bar" rule. This rule denies the patentee any protection under the doctrine of equivalents with respect to a claim limitation that was narrowed by amendment during prosecution for any reason related to a statutory requirement for patentability. Although the Federal Circuit found some authority for the "complete bar" rule in its prior cases, the court acknowledged that it overruled a long line of precedent that employed a "flexible" approach to determining the range of equivalents remaining after a finding of prosecution history estoppel. *Festo,* 234 F.3d at 574-75.

II.

THE "COMPLETE BAR" RULE CONFLICTS WITH THIS COURT'S DECISIONS

The Federal Circuit' s "complete bar" rule means that prosecution history estoppel precludes any range of equivalents for an amended claim element. *Festo*, 234 F.3d at 569 ("When a claim amendment creates prosecution history estoppel with regard to a claim element, there is no range of equivalents available for the amended claim element."). This rule forecloses further consideration of the prosecution record in any particular case where an amendment triggering prosecution history estoppel has occurred. *Id.* at 600 (Michel, J., concurring in part, dissenting in part).[4]

---

[3] *Control Res., Inc. v. Delta Elecs.*, 133 F. Supp. 2d 121, 135 (D. Mass 2001).

[4] Thorough discussions of precedential decisions of this Court and of the Federal Circuit are set forth in the Federal Circuit's majority opinion and in Judge Michel's dissenting opinion, and will not be repeated here.

The Federal Circuit held that an estoppel is triggered "when an amendment has narrowed the scope of a claim for a reason *related to patentability*." *Id.* at 574. The net effect is that a narrowing amendment for any reason related to patentability -- whether substantial or insubstantial -- deprives the patentee of any protection under the doctrine of equivalents with respect to the amended claim element. It is difficult to reconcile these holdings with this Court's precedent.

The Federal Circuit's "complete bar" rule proceeds from the premise that this Court has never addressed the range of permissible equivalents that remains after an estoppel-creating amendment. *Id.* at 569. In *Warner-Jenkinson*, however, this Court left no room for the conclusion that all equivalents to an amended claim element are forfeited regardless of the reasons for an amendment. Instead, it ruled that the nature of the Patent and Trademark Office's objection and the rationale for the amendment were subject to a court's examination before determining the range of equivalents. *Warner-Jenkinson*, 520 U.S. at 33 and n. 7.

In *Warner-Jenkinson*, the Court referred to its own precedent and pointed out that, in each of its prior cases dealing with prosecution history estoppel, the prosecution record was examined and the reasoning behind an amendment was probed before applying prosecution history estoppel as a limitation on the doctrine of equivalents. *Id.* at 30-31. "What *is* permissible for a court to explore is the reason (right or wrong) for the objection and the manner in which the amendment addressed and avoided the objection." *Id.* at 33 n.7 (emphasis in original). Such inquiries would be useless acts under a "complete bar" rule.

Moreover, this Court placed the burden on the patentee to establish that the rationale for a limiting amendment to the claims during prosecution would not preclude infringement by equivalents to that element. *Id.* at 33 (The court then would decide "whether that reason is sufficient to *overcome prosecution history estoppel* as a bar to application of the doctrine of equivalents to the element added by that amendment.") (emphasis added). This evidentiary burden would be meaningless if the "complete bar" rule were applied, because, under that rule, whenever a claim amendment creates prosecution history estoppel, no scope of equivalents is available. The Federal Circuit's new rule circumvents this Court's approach to the scope of equivalents available after claim amendments.

The diminution of patent protection resulting from the "complete bar" rule is exacerbated by the Federal Circuit's relatively low threshold for determining when an amendment results in an estoppel. The court held that amendments made for any reason related to patentability give rise to estoppels. *Festo*, 234 F.3d at 576. In *Warner-Jenkinson*, this Court held that failure to establish a reason for a claim amendment leads to a presumption that the amendment was made for a "substantial" reason related to patentability. *Warner-Jenkinson*, 520 U.S. at 33-34. This holding suggests that estoppels arise only from amendments made for "substantial" reasons related to patentability. The Federal Circuit rule omits any requirement of substantiality.[5] The "complete bar" rule,

[5] For example, in the case at bar, certain amendments were made for purposes of clarification (responding to an examiner's inquiry as to whether the claimed device is a true motor or a magnetic clutch) and for purposes of eliminating improper multiple claim dependencies (resulting from the foreign origin of the application). *See Festo*, 234 F.3d at 583. Both amendments were related to statutory requirements of patentability (35 U.S.C. § 112). The court did not, however, address whether the reasons for the amendments were so substantial that they should create estoppels precluding all application of the doctrine of equivalents to the amended limitation.

together with the court's low standard for determining when an amendment gives rise to an estoppel, creates a regime that virtually eliminates the doctrine of equivalents. It is, therefore, inconsistent with this Court's admonition that "to change so substantially the rules of the game ... could very well subvert the various balances the PTO sought to strike when issuing the numerous patents which have not yet expired and which would be affected by our decision." *Warner-Jenkinson*, 520 U.S. at 32 n.6. The Federal Circuit's ruling vitiates this Court's careful balancing of the competing needs of meaningful patent protection and adequate public notice in fashioning limits on the doctrine of equivalents. *See id.* at 34 (The presumption places "reasonable limits" on the doctrine of equivalents and "further insulates the doctrine from any feared conflict with the Patent Act.").

It was this very kind of balancing that was reflected in the Federal Circuit's own decisions prior to the ruling below. *See Festo*, 234 F.3d at 609-10, 611 (Michel, J., concurring in part, dissenting in part). In more than fifty decisions spanning nearly two decades, with few exceptions, the Federal Circuit utilized a flexible, case-by-case approach in determining the extent to which prosecution history estoppel acted as a legal limitation on the doctrine of equivalents. *See, e.g., Hughes Aircraft Co. v. United States*, 717 F.2d 1351, 1363 (Fed. Cir. 1983) (prosecution history estoppel may limit application of the doctrine of equivalents "within a spectrum ranging from

great to small to zero," depending on the reasons for the positions taken during prosecution). Because of the Federal Circuit's exclusive jurisdiction over appeals in patent cases from the Patent and Trademark Office and the district courts, its long-standing "flexible" approach has guided both the procurement and enforcement of the vast majority of unexpired patents.

III.

THE "COMPLETE BAR" RULE IS CONTRARY TO PUBLIC POLICY

A. THE "COMPLETE BAR" RULE ALL BUT ABOLISHES THE DOCTRINE OF EQUIVALENTS FOR MORE THAN 1.2 MILLION ISSUED PATENTS

More than 1.2 million patents have been issued and remain in force in the United States. These patents were prosecuted based on reasonable and settled expectations as to the effect of narrowing amendments on the scope of equivalents for a claim element. *See Festo*, 234 F.3d at 618-19 (Michel, J., concurring in part, dissenting in part). During the process of negotiating with the Patent and Trademark Office to procure the allowance of claims, many patentees accepted limiting amendments without intending to surrender the entire coverage afforded by the doctrine of equivalents. *See* William James, *Ensuring Broad Claim Coverage After* Festo, The Computer & Internet Lawyer, May 2001, at 13, 13-14.

Under then-existing and well-established law, a range of equivalents remained available to an applicant who narrowed a claim by amendment, limited only by the scope of

the prior art and a determination of what was relinquished based on the reason for the amendment. *See Festo*, 234 F.3d at 612-15 (Michel, J., concurring in part, dissenting in part) (collecting Federal Circuit cases applying the "flexible bar" rule). The inventor's reliance on the doctrine of equivalents formed part of the consideration for the inventor's disclosure of the invention to the public; hence, the retroactive effect of the "complete bar" rule upsets the basic assumptions underlying the bargain between the public and the inventor. *Warner-Jenkinson*, 520 U.S. at 32 and n.6; *Festo*, 234 F.3d at 618-619 (Michel, J., concurring in part, dissenting in part).

A rationale for the application of prosecution history estoppel is that a patentee should be precluded from recapturing, through the doctrine of equivalents, subject matter that was relinquished during prosecution to obtain the patent. *Exhibit Supply Co. v. Ace Patents Corp.*, 315 U.S. 126, 136 (1942). A patentee might, for example, amend an aspect of a claim element to avoid prior art. The patentee may not recapture the surrendered subject matter. *Pharmacia*, 170 F.3d at 1376. However, under the pre-*Festo* "flexible bar" rule, a copyist could not, despite such an amendment, avoid infringement by making minor changes to a different aspect of the amended element, because the patentee had not secured allowance of the patent by relinquishing the coverage of the subject matter modified by the copyist. *See, e.g., Hughes Aircraft Co. v. United States*, 140 F.3d 1470, 1476 (Fed. Cir. 1998). Following the Federal Circuit's ruling, that protection is eliminated, because prosecution history estoppel precludes any range of equivalents for the amended claim element. *See, e.g., Control Res.*, 133 F. Supp. 2d at 136-37.[6]

---

[6] *See also Lockheed Martin Corp. v. Space Sys./Loral, Inc.*, 249 F.3d 1314, 1326-27 (Fed. Cir. 2001), which involved a

The effect of the "complete bar" rule on existing patents is illustrated by the Federal Circuit's post-*Festo* decision in *Insituform Techs., Inc. v. Cat Contracting, Inc.*, No. 00-1005, 2001 U.S. App. LEXIS 4570 (Fed. Cir. March 26, 2001). The lengthy history of the litigation, summarized in the court's opinion (*id.*, at *4 - *8), involved the Federal Circuit's twice finding that prosecution history estoppel did not preclude the application of the doctrine of equivalents with respect to one of the processes used by the accused infringers ("Process 1"). *See Insituform Techs., Inc. v. Cat Contracting, Inc.*, 99 F.3d 1098, 1109 (Fed. Cir. 1996) ("Insituform I"), *cert. denied*, 520 U.S. 1198 (1997), and *Insituform Techs., Inc. v. Cat Contracting, Inc.*, 161 F.3d 688, 692 (Fed. Cir. 1998) ("Insituform II"), *cert. denied*, 526 U.S. 1018 (1999). In *Insituform II*, the Federal Circuit concluded that this Court's decision in *Warner-Jenkinson* did not affect the earlier decision that prosecution history estoppel did not preclude application of the doctrine of equivalents to Process

---

claim to a system for controlling the orientation of a communications satellite. The Federal Circuit, applying *Festo*, held that no range of equivalents is available with respect to a claim limitation requiring a "means for rotating [a gyroscopic wheel] in accordance with a predetermined rate schedule which varies sinusoidally over the orbit at the orbital frequency of the satellite." The language "at the orbital frequency of the satellite" was added by amendment to distinguish over prior art that disclosed sinusoidal variation over a period of minutes, rather than over the orbital frequency of 24 hours. The patentee argued that this amendment had nothing to do with the issue of equivalence, because the accused infringer's satellite employed substantially the 24-hour sinusoidal variation of the claim, not the short periods of variation described in the prior art. Nonetheless, because the limitation was amended to overcome the prior art, it was accorded no range of equivalents.

1. 161 F.3d at 692. The court reasoned that although the pertinent claim limitation had been narrowed during prosecution to distinguish over prior art, the patentee did explain the reason for the amendment, and a scope of protection encompassing Process 1 was not surrendered.

After the decision in the case here under review, the Federal Circuit addressed *Insituform* a third time, on appeal from the district court's final judgment entered after a bifurcated trial on damages. The Federal Circuit held that its ruling in the present case, revisiting the issue of prosecution history estoppel, compelled the conclusion that prosecution history estoppel barred any range of equivalents. 2001 U.S. App. LEXIS 4570, at *22-*24. The judgment of infringement was, therefore, reversed.

As a consequence of patentees' reliance on then-existing and well-settled law, the vast majority of issued patents have been significantly diminished in value by the "complete bar" rule. The value of a patent is tied directly to the scope of its claims. Robert P. Merges & Richard R. Nelson, *On the Complex Economics of Patent Scope*, 90 Colum. L. Rev., 839, 839 (May 1990). If the decision below were permitted to stand, it is likely that in many cases an inventor would be found to have sacrificed a key claim element of the invention by making an amendment, opening up to competitors the area just outside the literal scope of this element. *See* John A. Wasleff, et al., Festo *Opens the Door*, Nat'l. L.J., Feb. 5, 2001, at C1, C21. The retroactive application of the "complete bar" rule would provide a safe harbor to competitors and copyists -- they can "read the prosecution history to identify amendments made for patentability reasons ... copy every other limitation exactly, but substitute any known interchangeable structure, matters or step for any limitation that has been amended." *Festo*, 234

F.3d at 616 (Michel, J., concurring in part, dissenting in part). The substance of an invention would be subordinated to its form, and the patent holder would be deprived of the benefit of the inventive efforts--a benefit that the doctrine of equivalents was designed to protect. *See Graver Tank*, 339 U.S. at 607; Kevin A. Wolff, et al., *The Unspoken Loss in Shareholder Value: Patent Rights Take a Hit*, Mealey's Litig. Rep. Intell. Prop., Apr. 2, 2001, at 41, 48 ("... *Festo* places greater emphasis on the public notice function of the claims to put would-be infringers on notice, but in the process trump[s] the patentee's equitable interests.").

The value of the patent is also tied directly to the ability of its owner to enforce it against infringers and copyists. Under the decision below, the existence of a minor amendment to a claim element in the prosecution record will lead judges to dismiss what otherwise would have been meritorious patent infringement cases. *See* Marc S. Hanish & Adrienne Yeung, *Patent Practitioners Beware: The Federal Circuit Releases a Manifesto*, 9 Nevada Lawyer 18, 21 (Mar. 2001). Furthermore, many pending lawsuits were initiated by parties and their counsel on the basis of the same reasonable and well-settled expectations regarding the relationship between prosecution history estoppel and the doctrine of equivalents. Many of these suits will now be barred by the decision below.[7]

---

[7] The impact of the "complete bar" rule on litigation involving issued patents is highlighted by the significant number of post-*Festo* Federal Circuit decisions in which the "complete bar" rule was invoked to eliminate any scope of equivalents for an amended claim limitation. As of this writing, the "complete bar" rule has been applied in the following post-*Festo* decisions of the Federal Circuit:

Pioneer Magnetics, Inc. v. Micro Linear Corp., 238 F.3d 1341, 1346-47 (Fed. Cir. 2001), *petition for cert. filed*, 69 U.S.L.W. 3756 (U.S. May 23, 2001) (No. 00-1765);

Litton Sys., Inc. v. Honeywell Inc., 238 F.3d 1376, 1380 (Fed. Cir. 2001), *petition for cert. filed*, 69 U.S.L.W. 3702 (U.S. April 23, 2001) (No. 00-1617);

Insituform Techs., 2001 U.S. App. LEXIS 4570, at *22-*23;

Lockheed Martin, 249 F.3d at 1326-27;

Altech Controls Corp. v. EIL Instruments, Inc., No. 00-1216, 2001 U.S. App. LEXIS 8089, at *12 (Fed. Cir. May 2, 2001);

Mycogen Plant Science, Inc. v. Monsanto Co., 252 F.3d 1306, 1319-1320 (Fed. Cir. 2001);

Semitool, Inc. v. Novellus Sys., Inc., No. 00-1375, 2001 U.S. App. LEXIS 11986, at *22 (Fed. Cir. June 8, 2001);

Creo Products Inc. v. Dainippon Screen Mfg. Co., Ltd., No. 00-1536, 2001 U.S. App. LEXIS 9302, at *4-*5 (Fed. Cir. May 14, 2001), *petition for cert. filed*, 70 U.S.L.W. 3130 (U.S. August 21, 2001) (No. 01-269).

The diminution of value of existing patents will also have a disproportionate effect on smaller companies and individual inventors who rely on only a small number of patents to cover the fruits of their research and development. These patents may serve as their only source of leverage against much larger competitors with superior resources. Peter J. Ayers, *Federal Circuit's* Festo *is Unfriendly Toward Patent Rights*, Texas Lawyer, Jan. 8, 2001, at 53, 54.

B. THE "COMPLETE BAR" RULE WILL SUBSTANTIALLY AND UNDULY BURDEN PATENT PROSECUTION

1. The Decision Below Fails to Take into Account the Realities of Claim Drafting and Patent Prosecution

The patent examination process ideally results in allowance of claims whose literal scope is fully commensurate with the applicant's inventive contribution and the descriptive and enabling support provided by the specification. The Federal Circuit's "complete bar" rule has dramatically altered the process used to achieve that result and places unrealistic burdens on applicants and their patent counsel. Applicants are now required to present claims that are precisely drafted as broadly as the disclosure supports (35 U.S.C. § 112) and the prior art permits (35 U.S.C. §§ 102 and 103), yet not so broad as to provoke a rejection that may, during prosecution, require an amendment that will foreclose any subsequent reliance on the doctrine of equivalents. The alternative is to present narrow claims, thus relinquishing literal coverage, in hopes of avoiding an estoppel. Applicants and their counsel will find this dilemma difficult to resolve. Paul F. Fehlner, *A New 'Biohazard' for Patent Applicants: Broad Biotechnology Patent Claims*, The Metropolitan Corporate Counsel, Mar. 2001, at 4, 4.

The expectation that applicants and their counsel can determine with precision the broadest claim language that will not provoke a rejection is unrealistic. Bruce J. Rose, et al., *The Value of Quality Patent Preparation and Prosecution Increases under* Festo, 8 Elec. Banking L. and Com. Rep. 26,

28 (Feb. 2001). Patent prosecution involves human interactions that are not predictable. Language that one examiner might find clear and unobjectionable may be found by another examiner to be defective. Judge Linn succinctly described the impact of the new rule (of the decision below) on claim drafting: "The new regime also places greater emphasis on literary skill than on an inventor's ingenuity." *Festo*, 234 F.3d at 620 (Linn, J., concurring in part, dissenting in part).

Patent applications, particularly in highly competitive emerging technologies, are often filed as early as possible. Knowledge about the invention and the prior art changes over the course of prosecution. Even the most thorough pre-filing search typically does not unearth every piece of prior art, and the patent attorney cannot confidently anticipate the prior art on which the examiner will focus during prosecution. Gerry Gressel, *Claim Drafting and Claim Amendment to Reduce the* Festo *Effect*, Intell. Prop. Today, Apr. 2001, at 24, 24.

Before the Federal Circuit decision in this case, applicants could advance patent prosecution and allowance by offering amendments to overcome examiners' objections. They now have a strong incentive to resist such changes and to traverse and appeal rejections that they might otherwise readily accept. The Federal Circuit's new rule "creates a disincentive for the present system of negotiation between applicant and PTO examiner in arriving at agreed upon claim language, with probably some as of yet unforeseen consequences." S. Jay Plager, *Challenges for Intellectual Property Law in the Twenty-First Century: Indeterminacy and Other Problems*, 2001 U. Ill. L. Rev. 69, 74 (2001). The resulting increased burdens on both applicants and the Patent and Trademark Office are apparent.

Although it is true that assessing what the patentee has relinquished and what remains under the doctrine of equivalents after an amendment is neither easy nor precise, this task is not substantially different from many other disputes that courts must resolve. Indeed, determining the permissible scope of equivalents that remain after a narrowing amendment is not more difficult, and may be less difficult, than determining the range of equivalents to which an unamended claim is entitled. The amendment and accompanying dialogue between the applicant and the patent examiner are likely to provide some information that assists in ascertaining the appropriate range of equivalents. The problems identified by the Federal Circuit are not so much a result of the fact that a claim has been narrowed by amendment as they are of problems inherent in determining where the equivalency line should be drawn.

2. The Federal Circuit's New Rule Will Increase The Cost And Complexity of Patent Prosecution

The new rule announced by the Federal Circuit has spawned prosecution strategies that add to the burdens of the applicant and the Patent and Trademark Office. Time-consuming and expensive pre-filing searches are more important now to ensure that the claim drafter has reviewed as much of the prior art that the examiner may consider important during prosecution as possible. Of course, "there is no guarantee that the examiner will recognize the distinguishing features of even the most carefully crafted claim." Steven E. Koffs, *What's Left of the Doctrine of Equivalents?*, The Legal Intelligencer, Jan. 4, 2001, at 5, 7.

The applicant also may choose initially to draft and file numerous independent claims of varying scope, so that if the broader claims are rejected, the narrower claims may be allowed without the need for amendment. Hanish & Yeung, *supra,* 9 Nevada Lawyer at 21. If the examiner is not convinced by the applicant's arguments, the applicant will then have to spend additional time and resources to appeal the examiner's decision to the Board of Patent Appeals and Interferences.

The "complete bar" rule increases the costs of patent prosecution, a result that is not in the public interest. Plager, *supra*, 2001 U. Ill. L. Rev. at 73-74 (Federal Circuit should ask whether its decisions "achieve the goal sought with the least cost to other parts of the system?"). Commentators have suggested that other, less draconian solutions that take into account the limitations of the English language and the realities of patent preparation and prosecution are available and should be considered. William M. Atkinson, et al., *Was*

Festo *Really Necessary?*, 83 J. Pat. & Trademark Off. Soc'y 111, 141-42 (Feb. 2001) (demonstrating that alternatives to the "complete bar" rule provide public notice and certainty).

C. THE FEDERAL CIRCUIT HAS UPSET THE BALANCE BETWEEN ENCOURAGING INNOVATION AND PROVIDING NOTICE TO THE PUBLIC OF THE SCOPE OF AN ISSUED PATENT

The significantly greater contentiousness, expense and duration of patent prosecution and likelihood of increased free-riding on patented innovations by competitors and copyists under the Federal Circuit's new rule will undermine the substantial contribution of the patent system to economic growth in the United States. One of the primary functions of the patent system is to encourage innovation and investment in research and development to foster economic growth as well as technological advance. *Festo*, 234 F.3d at 639 (Newman, J., concurring in part, dissenting in part). The doctrine of equivalents plays an important role in this function of the patent system. *Id.* at 641; *see also Hilton Davis Chem. Co. v. Warner-Jenkinson Co.*, 62 F.3d 1512, 1533-34 (Fed. Cir. 1995) (Newman, J., concurring) ("[T]he doctrine of equivalents, on balance, serves the interest of justice and the public interest in the advancement of technology, by supporting the creativity of originators while requiring appropriators to adopt more than insubstantial technologic change."), *rev'd on other grounds*, 520 U.S. 17 (1997); Paul J. Otterstedt, *Unwrapping File Wrapper Estoppel in the Federal Circuit*, 67 St. John's L. Rev. 405, 422 (Spring 1993) (doctrine of equivalents ensures adequate patent protection for inventors, which encourages innovation, economic growth and American competitiveness). The Federal Circuit's dramatic change in its view of the law thus negatively affects

incentives for investment in research and development of new technology. Carmen Matutes, et al., *Optimal Patent Design and Diffusion of Innovations*, 27 RAND J. Econ. 60, 61-62 (Spring 1996) (strong scope of protection benefits public welfare because inventor has more flexibility to exercise his or her property rights and will more readily disclose knowledge derived from basic innovation); Suzanne Scotchmer, *Standing on the Shoulders of Giants: Cumulative Research and the Patent Law*, 5 J. Econ. Perspectives 29, 31 (Winter 1991) (first innovators will have incentives to invest only where they can benefit from surplus provided by second generation products).

Moreover, inventors, faced with the prospect of obtaining a scope of protection limited to the strict, literal language of their amended claims, will have a strong incentive to rely on trade secret protection. *See Graver Tank*, 339 U.S. at 607 (noting that limiting scope of claims to their literal language would "foster concealment rather than disclosure of inventions," and thus would run counter to one of the primary purposes of the patent system). Judge Michel in his dissent stated that the Federal Circuit's "complete bar" rule would create:

> a perverse incentive for patent applicants, particularly those who are financially unable to invoke the appeals process, to simply abandon their applications. In many cases, it may be more effective to protect an invention by maintaining it as a trade secret than by accepting a patent that will publicize the invention, but provide protection only from literal infringement.

Festo, 234 F.3d at 618 (Michel, J., concurring in part, dissenting in part). Judge Michel's views are shared by others. *See, e.g.*, Simone A. Rose, *Patent "Monopolyphobia": A Means of Extinguishing the Fountainhead?*, 49 Case W. Res. L. Rev. 509, 523-24 (Spring 1999); Mark F. Grady & Jay I. Alexander, *Patent Law and Rent Dissipation*, 78 Va. L. Rev. 305, 318 (Feb. 1992). This result described by Judge Michel--inhibiting the disclosure of new technology--will significantly reduce society's gain from research and development for at least three reasons. First, knowledge derived from new technological innovations will not enter the public domain. Quick access to that knowledge facilitates research and development of follow-on improvements. *See* Wegner, *supra*, 18 Rutgers Computer & Tech. L.J. at 31. Second, the cost of maintaining a trade secret to the innovating firm may come close to or equal the public benefit derived from the innovation. *See* Grady and Alexander, *supra*, 78 Va. L. Rev. at 318. Third, resort to trade secret protection in the early stages of development of a new technology will often result in wasted resources and additional costs, thus further reducing the overall public benefit of the innovation. Competitors would waste resources, because they would likely invest research and development dollars in redundant efforts to derive the same new technology as that maintained in secrecy by the innovator. *See* Edmund W. Kitch, *The Nature and Function of the Patent System*, 20 J.L. & Econ. 265, 278 (1977).

Another goal of the doctrine of equivalents is to prevent copyists from avoiding infringement by making insubstantial changes to a patented invention through the use of after-arising technology. The Federal Circuit's "complete bar" rule nullifies this goal if the competitor or copyist is employing after-arising technology. Judge Rader commented that "this result defies logic." *Festo*, 234 F.3d at 619 (Rader,

J., concurring in part, dissenting in part). Judge Rader also correctly observed that the Federal Circuit's application of the "complete bar" rule to after-arising technology conflicts with an important principle underlying prosecution history estoppel:

> Estoppel prevents a litigant from denying an earlier admission upon which another has already relied. In the case of patent law, the admission is the applicant's surrender of claim scope to acquire the patent. . . By definition, applicants could not have surrendered something that did not even exist at the time of the claim amendment, namely after-arising technology.

Id. at 619-20 (internal citation omitted).

By removing an important check on the behavior of the competitor or copyist -- a step taken by the Federal Circuit to provide clearer notice to the public -- the Federal Circuit failed to accord adequate weight to the need to provide requisite incentives for inventors "to bear the commercial risk in developing and disclosing new technology." *Festo*, 234 F.3d at 627 (Linn, J., concurring in part, dissenting in part). Scholars' analyses of the doctrine of equivalents from both a legal and an economic perspective support this view. *See, e.g.*, Stanley M. Besen & Leo J. Raskind, *An Introduction to the Law and Economics of Intellectual Property*, 5 J. Econ. Perspectives 3, 5 and n.2 (Winter 1991) ("The legal treatment of related innovations will also influence the ability of producers to capture sufficient revenues to justify undertaking research and development. If the law permits others easily to 'innovate around' an innovation, or to produce complements to it, the incentives to create the innovation may be reduced

significantly."); Wegner, *supra*, 18 Rutgers Computer & Tech. L.J. at 31 ("Patent protection that can be easily circumvented is antithetical to building a strong research-based industrial economy.").

Finally, the increased costs of obtaining patent protection as a result of the "complete bar" rule may become prohibitively high for individual inventors and start-up companies. *Festo*, 234 F.3d at 624 (Linn, J., concurring in part, dissenting in part). Patent protection for key technology often is a major asset that high-technology start-ups have to attract investors. The success of such start-ups has been a major factor in this country's dominant positions in biotechnology, microelectronics, and information technology. The protracted prosecution, increased costs, and uncertainty surrounding amendments to claims as a result of the decision below likely will discourage innovation and investment in research and development by these entities. *See id.*

CONCLUSION

The judgment of the Court of Appeals should be reversed.

Respectfully submitted,

Robert E. Hirshon*
President
American Bar Association
750 N. Lake Shore Drive
Chicago, IL 60611
(312) 988-5000
E. Anthony Figg
Minaksi Bhatt
Robert H. Cameron
Counsel for Amicus Curiae
**Counsel of Record*

Dated: August 31, 2001

AUG 31 2001

(35)

Supreme Court, U.S.
FILED
AUG 31 2001
CLERK

No. 00-1543

IN THE

Supreme Court of the United States

OCTOBER TERM, 2001

CORRECTED COPY

FESTO CORPORATION,

Petitioner,

v.

SHOKETSU KINZOKU KOGYO KABUSHIKI CO., LTD.,

Respondents.

**On Writ Of Certiorari To
The United States Court Of Appeals
For The Federal Circuit**

BRIEF OF AMICUS CURIAE IN SUPPORT OF REVERSAL OF THE JUDGMENT BELOW

Wisconsin Alumni Research Foundation; The Regents of the University of California; Massachusetts Institute of Technology; Washington Research Foundation; University of Pennsylvania; University of Minnesota; The Board of Trustees of the Leland Stanford Junior University; SUNY Research Foundation; Cornell Research Foundation, Inc.;

(Caption continued on inside front cover)

KEVIN M. O'BRIEN
MICHAEL E. MURPHY
RONALD D. TRICE
Baker & McKenzie
815 Connecticut Avenue, N.W.
Washington, D.C. 20006

SUSAN G. BRADEN
Counsel of Record
Baker & McKenzie
815 Connecticut Avenue, N.W.
Washington, D.C. 20006
(202) 452-7075

August 31, 2001

Counsel for Amicus Curiae

61 pp
4 f/o

University of Florida; University of Utah; Oregon Health & Science University; University of Texas-Medical Branch; University of Vermont; M.D. Anderson Cancer Center-Houston; Cold Spring Harbor (Woods Hole Oceanographic Center); The American Council on Education; The Association of American Universities; The National Association of State Universities and Land-Grant Colleges; Council on Governmental Relations; and Research Corporation Technologies.

TABLE OF CONTENTS

Page

TABLE OF AUTHORITIES iv

INTEREST OF AMICUS CURIAE 2

SUMMARY OF ARGUMENT 6

ARGUMENT 8

I. The Judgment In *Festo* Should Be Reversed Because It Abandons Over Two Centuries Of Anglo-American Jurisprudence Concerning The Doctrine Of Equivalents 8

A. The Doctrine Of Equivalents Was Adopted From English Common Law To Provide Patent Owners With Comparable Protection Under U.S. Law 8

B. The Range Of Protection Afforded Under The Doctrine Of Equivalents Has Been Determined By The Qualitative Value Of The Discovery Or Invention To The Public 11

II. The Judgment In *Festo* Should Be Reversed Because It Undermines The Bayh-Dole Act 16

RECEIVED

SEP 0 7 2001

LIBRARY SERVICES

TABLE OF CONTENTS (Cont'd.)

Page

III. The Judgment In *Festo* Should Be Reversed To Relieve Federal Courts From Having To Resolve A Potentially Divisive Constitutional Question 19

A. The Majority Decision In *Festo* Adversely Affects Vested Property Rights 19

B. The Majority Decision In *Festo* Effects A Taking of Property 20

IV. The Judgment In *Festo* Should Be Reversed Because Congress Is The Proper Forum To Resolve Policy Differences Concerning Patent Law 25

CONCLUSION 29

APPENDICES

Summary Chart Of Selected Data From *Association Of University Technology Managers, Inc. Licensing Survey: FY 1991-1999* U.S. Universities 1a

Summary Chart Of Selected Data From *Association Of University Technology Managers, Inc. Licensing Survey: FY 1991-1999* U.S. Hospitals & Research Institutes 2a

Association Of University Technology Managers, Inc. Licensing Survey: FY 1999, Attachment E (2000) 3a

TABLE OF CONTENTS (Cont'd.)

Page

Overview Of Research, Development, And Technology Transfer Activities Of Amicus Curiae 9a

TABLE OF AUTHORITIES

CASES: **Page**

Chicago, Burlington & Quincy Railroad v. *City of Chicago*, 166 U.S. 226 (1897) 24

Cimiotti Unhairing Co. v. *American Fur Refining Co.*, 198 U.S. 399 (1905) 11

Computer Assoc. Int'l, Inc. v. *Altai, Inc.*, 982 F.2d 693 (2d Cir. 1992) 27

Consolidated Roller-Mill Co. v. *Barnard & Leas Mfg. Co.*, 156 U.S. 261 (1894).....11

Continental Paper Bag Co. v. *Eastern Paper Bag Co.*, 210 U.S. 405 (1908).....11,12

Eastern Enterprises v. *Apfel*, 524 U.S. 498 (1998) 24,25

Eibel Process Co. v. *Minnesota & Ontario Paper Co.*, 261 U.S. 45 (1923).....12

Festo Corp. v. *Shoketsu Kinzoku Kogyo Kabushiki Co., Ltd.*, 234 F.3d 558 (Fed. Cir. 2000) (en banc).. *passim*

General Motors Corp. v. *Romein*, 503 U.S. 181 (1992).....24

Graver Tank & Mfg. Co. v. *Linde Air Prods. Co.*, 339 U.S. 605 (1950)..... *passim*

Great Northern Railway Co. v. *Sunburst Oil & Refining Co.*, 287 U.S. 358 (1932).....24

Harper & Row, Publishers, Inc. v. *Nation Enterprises*, 471 U.S. 539 (1985) 27

TABLE OF AUTHORITIES (Cont'd.)

CASES: **Page**

Morley Sewing Machine Co. v. *Lancaster*, 129 U.S. 263 (1889)..... *passim*

Muhlker v. *New York & Harlem Railroad Co.*, 197 U.S. 544 (1905).....24

Mycogen Plant Science, Inc. v. *Monsanto Co.*, 252 F.3d 1306 (Fed. Cir. 2001).....21

Palazzolo v. *Rhode Island*, 121 S. Ct. 2448 (2001).....23,24

Seymour v. *Osborne*, 78 U.S. 516 (1870).....21

Warner-Jenkinson Co. v. *Hilton Davis Chem. Co.*, 520 U.S. 17 (1997)..... *passim*

Winans v. *Denmead*, 56 U.S. 330 (1853) 20,21

Webb's Fabulous Pharmacies, Inc. v. *Beckwith*, 449 U.S. 155 (1980).....23

Westinghouse v. *Boyden Power Brake Co.*, 170 U.S. 537 (1898)..... *passim*

Constitutional Provisions

U.S. CONST., Art. I, § 8, cl. 8..... *passim*

Statutory Provisions and Rules

35 U.S.C. §§ 102-103 (2001).....7

TABLE OF AUTHORITIES (Cont'd.)

Page

35 U.S.C. § 154(a)(2) (2001) 22

35 U.S.C. §§ 200-212 (2001) ..... *passim*

35 U.S.C. § 261 (2001) 19

SUP. CT. R. 37.3.(a) 2

Congressional Hearings

Industrial Innovation and Patent and Copyright Law Amendments: Hearings Before the House Subcomm. on Courts, Civil Liberties, and The Administration of Justice, 96th Cong., 2nd Sess., 105 (April 15, 1980) (statement of Donald R. Dunner, President, American Patent Law Association on H.R. 6033, H.R. 6934, H.R. 3806, H.R. 214 (President's Industrial Innovation Program)) 17

Patent Policy: Hearings Before the Subcomm. on Science, Technology, and Space of the Senate Comm. on Commerce, Science, and Transportation, 96th Cong., 1st Sess., 243 (July 23, 1979) (statement of Howard W. Bremer on S. 1215, the "Science and Technology Research and Development Utilization Policy Act") ..... *passim*

TABLE OF AUTHORITIES (Cont'd.)

Page

Patent Policy: Hearings Before the Subcomm. on Science, Technology, and Space of the Senate Comm. on Commerce, Science, and Transportation, 96th Cong., 1st Sess., 281 (July 27, 1979) (statement of Tom Arnold, President, American Patent Law Association on S. 1215 "Science and Technology Research and Development Utilization Policy Act") ... 19,20

Miscellaneous

Barton H. Thompson, Jr., *Judicial Takings*, 76 Va. L. Rev. 1449 (1990) 25

Brief of *Amicus Curiae* of the Chamber of Commerce of the United States, *Festo* v. *Shoketsu Kinzoku Kogyo Kabushiki Co., Ltd.*, On Petition For Writ Of Certiorari (No. 00-1543) 21

Christina Y. Lai, *A Dysfunctional Formalism: How Modern Courts Are Undermining The Doctrine Of Equivalents*, 44 UCLA L. Rev. 2031 (1997) 13

FEDERALIST No. 43 (James Madison) 19

Kurt L. Giltzenstein, *A Normative and Positive Analysis of the Scope of the Doctrine of Equivalents*, 7 Harv. J. Law & Tech. 281 (1994) 20

Lori Pressman, Chair and Editor, *Association of University Technology Management, Inc. Licensing Survey: FY 1999* (2000) ..... *passim*

TABLE OF AUTHORITIES (Cont'd.)

Page

M. Marge Machen, Project Officer, *Academic Research And Development Expenditures: Fiscal Year 1999*, NSF 01-329, Division of Science Resources Studies, National Science Foundation (June 2001).....3

Nancy J. Linck and John E. McGarry, *Patent Procurement And Enforcement In Japan – A Trade Barrier*, 27 GW J. Int'l L. & Econ. 411 (1993-1994).....28

Raymond M. Wolfe, Project Officer and Principal Author, *Research and Development In Industry: 1998*, NSF 01-305, Division of Science Resource Studies, National Science Foundation (Oct. 2000).....3, 12

"*Science and Technology Policy: Past and Prologue – A Companion to Science and Engineering Indicators – 2000*," National Science Board (2000) ..... *passim*

"Technology Transfer: Administration of the Bayh-Dole Act By Research Universities," United States Government Accounting Office Report to the Senate Committee on the Judiciary and the House Committee on the Judiciary (May 1998) ..... *passim*

The Bayh-Dole Act: A Guide To The Law And Implementing Regulations, Council On Governmental Relations (1999) <http://www.cogr.edu/bayh-dole.html > ..... *passim*

TABLE OF AUTHORITIES (Cont'd.)

Page

Foreign Cases

Curtis v. *Platt*, 3 Ch. Div. 135 (1863) 8

Proctor v. *Bennis*, 36 Ch. Div. 740 (1887).....9

IN THE

Supreme Court of the United States

OCTOBER TERM, 2001

FESTO CORPORATION,

Petitioner,

v.

SHOKETSU KINZOKU KOGYO KABUSHIKI CO., LTD.,

Respondents.

On Writ Of Certiorari To
The United States Court Of Appeals
For The Federal Circuit

BRIEF OF AMICUS CURIAE IN SUPPORT OF REVERSAL OF THE JUDGMENT BELOW

WISCONSIN ALUMNI RESEARCH FOUNDATION; THE REGENTS OF THE UNIVERSITY OF CALIFORNIA; MASSACHUSETTS INSTITUTE OF TECHNOLOGY; WASHINGTON RESEARCH FOUNDATION; UNIVERSITY OF PENNSYLVANIA; UNIVERSITY OF MINNESOTA; THE BOARD OF TRUSTEES OF THE LELAND STANFORD JUNIOR UNIVERSITY; SUNY RESEARCH FOUNDATION; CORNELL RESEARCH FOUNDATION, INC.; UNIVERSITY OF FLORIDA; UNIVERSITY OF UTAH; OREGON HEALTH & SCIENCE UNIVERSITY; UNIVERSITY OF TEXAS-MEDICAL BRANCH; UNIVERSITY OF VERMONT; M.D. ANDERSON CANCER CENTER-HOUSTON; COLD SPRING HARBOR (WOODS HOLE OCEANOGRAPHIC CENTER); THE AMERICAN COUNCIL ON EDUCATION; THE ASSOCIATION OF AMERICAN UNIVERSITIES; THE NATIONAL ASSOCIATION OF STATE UNIVERSITIES AND LAND-GRANT COLLEGES; COUNCIL ON GOVERNMENTAL RELATIONS; AND RESEARCH CORPORATION TECHNOLOGIES.

INTEREST OF AMICUS CURIAE

Amicus curiae include leading research universities and related non-profit institutions in the United States that conduct and support research and development activities in connection with their primary educational mission. App. at 1a.[1] Following the enactment of the Patent and Trademark Law Amendments Act of 1980, P.L. 96-517, as amended in P.L. 98-620, Pub. L. 99-502, and Pub. L. 106-404, commonly known as the Bayh-Dole University and Small Business Procedures Act (current version at 35 U.S.C. §§ 200-212 (2001) (hereinafter the Bayh-Dole Act)), these institutions embarked on a historic enterprise by transferring their patented technology into the private sector to promote innovation and economic development.

The ability of *amicus curiae* to continue this activity is dependent on whether they may rely on the federal courts to protect their patents under the doctrine of equivalents, as unanimously affirmed by this Court in *Warner-Jenkinson Co.* v. *Hilton Davis Chemical Co.*, 520 U.S. 17 (1997) ("*Warner-Jenkinson*"). The majority decision in *Festo Corp.* v. *Shoketsu Kinzoku Kogyo Kabushiki Co., Ltd.*, 234 F.3d 558 (Fed. Cir. 2000) (en banc) ("*Festo*"), however, recently held that federal courts may no longer apply this doctrine to determine whether non-literal infringement has occurred if a claim is amended during the prosecution process for any reason that "relates to" the statutory requirement for a patent. *Id.* at 566. In addition, it held that when a "claim amendment" creates prosecution history estoppel regarding a "claim element," there is no range of equivalents available for the "amended claim element." *Id.* at 569. These new rules betray a myopic, and perhaps

[1] Pursuant to SUP. CT. R. 37.3.(a), letters of consent to filing this brief from counsel for the parties are on file with the Clerk of this Court. The undersigned counsel authored this brief and no person other than *amicus curiae* has made a monetary contribution towards its preparation.

uninformed, view of the prosecution process and a failure to appreciate how essential the doctrine of equivalents is to the incentive for innovation in this country, particularly in the academic and non-profit community.

A recent survey of 170 leading research universities and 29 related non-profit institutions, among which are many of our major teaching hospitals and research institutes, shows that in 1999 these institutions collectively contributed $25.1 billion or 93% of the total funds spent by this sector for research and development, and almost 20% of the total spent in this country.[2] *See* Lori Pressman, Chair and Editor, *Association of University Technology Management, Inc. Licensing Survey: FY 1999* (2000) (hereinafter 1999 *AUTM Survey*), Attachment E. App. at 3a-8a.[3] In addition, in just this one year these institutions: filed 8,413 patent applications with the United States Patent and Trademark Office ("PTO"); received 3,477 patents; and collected $791.2 million from licensing and other agreements for use of their patent rights. App. at 3a-8a.

In 1999, technology transfer from the academic and non-profit community to the private sector also "contributed over $40 billion in economic activity and supported more than 270,000 jobs.... In addition, business activity

[2] Selected information from AUTM copyrighted works is reprinted and cited herein with the authorization from AUTM.

[3] *Compare with* Raymond M. Wolfe, Project Officer and Principal Author, *Research and Development In Industry: 1998*, NSF 01-305, Division of Science Resource Studies, National Science Foundation (Oct. 2000) (hereinafter *R&D In Industry*) at 87, Table A-29 (reporting that $145.1 billion was spent by private industry on research and development); M. Marge Machen, Project Officer, *Academic Research and Development Expenditures: Fiscal Year 1999*, NSF 01-329, Division of Science Resources Studies, National Science Foundation (June 2001) (reporting that 597 universities and colleges and 17 federally funded centers in the United States spent approximately $27.4 billion for research and development activities in 1999).

associated with sales of [417 new] products [was] estimated to generate $5 billion in U.S. tax revenues at the federal, state, and local levels. . . . [M]ore than sixty percent. . . of [the 3,900 license and option] . . . agreements were made with small companies . . . well established as sources of job growth and economic development." 1999 *AUTM Survey* (Introductory Message From The President).

An overview of the nine-year period from 1991-1999, during which AUTM has conducted an annual survey, further evidences the dynamic engine of innovation that the majority decision in *Festo* needlessly has placed at great risk. During this period, research universities and related non-profit institutions collectively: spent $169,962,640,140 on research and development; filed 45,301 patent applications; were issued 15,996 patents; and received $4,082,074,536 from licensing and option agreements. App. at 1a-2a.

During a hearing that led to the passage of the Bayh-Dole Act, the United States Senate was advised by the American Council on Education, the largest association of colleges and universities in the United States, the Council on Governmental Relations of the National Association of Colleges and University Business Officers, the Society of University Patent Administrators, and the University of Wisconsin, Wisconsin Alumni Research Foundation, that:

> As a practical matter, . . . the greater need for the patent incentive lies primarily with universities and non-profit organizations, and small business. Technology transfer by universities and non-profits depends entirely on the underlying patent position, . . . [G]iven the fact that most university-generated inventions are embryonic in nature and require a great deal of development, and often are ahead of their time in the commercial sense . . . the *need for exclusivity* [is critical].

Patent Policy: Hearings Before the Subcomm. on Science, Technology, and Space of the Senate Comm. on Commerce, Science, and Transportation, 96th Cong., 1st Sess., 243 (July 23, 1979) (statement of Howard W. Bremer on S. 1215 "Science and Technology Research and Development Utilization Policy Act") (hereinafter Bremer Testimony) (emphasis added).

If the doctrine of equivalents can no longer be relied upon by research universities and related non-profit institutions to provide the requisite certainty of title and security for their discoveries and inventions, then the substantial benefits that the public has enjoyed from the transfer of some of our nation's most treasured intellectual property to the private sector will be substantially diminished.

For many years before her appointment to the United States Court of Appeals for the Federal Circuit, Judge Newman was a prominent patent counsel in the bar and private industry. In her separate opinion in *Festo* she invited *amicus* participation in this Court to demonstrate that the doctrine of equivalents has been essential in promoting innovation:

> The present patent law has supported a blossoming of technology-based industry in a competitive environment that is conspicuous for its entrepreneurial vigor. The balance among inventor, investor, competitor, and consumer, and the effect of the doctrine of equivalents on that balance, is not explored in the parties' briefs and had sparse *amicus* participation. . . . Although its influence is not easy to quantify, it is generally accepted that the doctrine contributes to an industrial policy that seeks to support technologic innovation.

Festo, 234 F.3d at 641 (Newman, J., concurring in part, dissenting in part).

Therefore, many of the leading research universities and non-profit institutions in the United States appear today as *amicus curiae* to assist this Court in understanding the important role that the application of the doctrine of equivalents has played in the birth and nurturing of this "technologic innovation" and promoting the "Progress of Science and the Useful Arts." U.S. CONST., Art. I, § 8, cl. 8.

SUMMARY OF ARGUMENT

Three years ago, the United States Court of Appeals for the Federal Circuit asked this Court "to speak to the death of . . . [the] doctrine [of equivalents]" for many of the same policy reasons advanced by the majority decision in *Festo*. On that occasion, this Court emphatically and unanimously replied: "We decline that invitation." *Warner-Jenkinson*, 520 U.S. at 21.

This Court once again should decline that invitation and reverse the judgment in *Festo* because it abandons over two hundred years of Anglo-American jurisprudence and undermines the Bayh-Dole Act, which was premised on the settled nature of the doctrine of equivalents and enacted to accelerate technology transfer from academic and non-profit institutions into the private sector.

The majority decision in *Festo* incorrectly assumes that all inventions are of equal value to the public. They are not. For this reason, federal courts historically have afforded protection under the doctrine of equivalents based on the "degree of the invention" or qualitative value of a patent to the public, by comparing the importance of newly-disclosed art within a field, and other factors relevant to the disclosures made to the public. This necessarily contextual analysis has provided a framework within which these variables can be

considered in a balanced manner, before a determination is made as to whether a non-identical product or use is an infringing one. Accordingly, this Court appropriately has precluded that inquiry in the past only in those situations where a claim element was specifically amended for the sole purpose of meeting the statutory requirements of novelty and non-obviousness, set forth in 35 U.S.C. §§ 102-103 (2001). *See Warner-Jenkinson*, 520 U.S. at 32.

This Court also has reminded lower federal courts that it is their responsibility to determine what constitutes a patent's "equivalent." *See Warner-Jenkinson*, 520 U.S. at 40. As to the weight to be accorded amendments made during prosecution, they were cautioned: "What *is* permissible for a court to explore is the reason (right or wrong) for the objection and the manner in which the amendment addressed and avoided the objection." *Id.* at 33 n.7 (emphasis in original). What this Court did not condone is the wholesale abdication of a federal court's responsibility to conduct an equivalence analysis or to embark on redefining property and attendant rights vested at the time of a patent's issuance, both of which the majority decision in *Festo* did.

Accordingly, this Court should reverse the judgment in *Festo* and uphold the long established principle of *stare decisis*, by reaffirming *Warner-Jenkinson* and thereby relieving the federal courts from having to confront the potentially divisive constitutional question of whether judicial actions are indeed exempt from the proscriptions of the Just Compensation Clause of the Fifth Amendment of the United States Constitution. Rather, this Court should defer to Congress to determine whether the public interest is best served by discarding the doctrine of equivalents in a time of such unprecedented innovation. *See Festo*, 234 F.3d at 630 (Newman, J., concurring in part, dissenting in part) ("policy aspects of technologic innovation, industrial growth, and competition . . . do not inhere in this Court's 'special expertise' in adjudication of patent disputes."); App. 1a-23a.

ARGUMENT

I. The Judgment In *Festo* Should Be Reversed Because It Abandons Over Two Centuries Of Anglo-American Jurisprudence Concerning The Doctrine Of Equivalents.

A. The Doctrine Of Equivalents Was Adopted From English Common Law To Provide Patent Owners With Comparable Protection Under U.S. Law.

At the height of the Industrial Revolution, when our nation was competing head-to-head with England as a principal trade rival, the Court unanimously adopted the doctrine of equivalents, from English common law, to provide patent owners with comparable protection under U.S. law.

In *Morley Sewing Machine Co.* v. *Lancaster*, 129 U.S. 263 (1889), the Court reviewed the heritage and application of this doctrine in England in a "case . . . before Vice Chancellor Wood, in 1863, . . . [who] said:

> When the thing is wholly novel, and one which has never been achieved before, the machine itself which is invented necessarily contains a great amount of novelty in all its parts and one looks very narrowly and very jealously upon any other machines for effecting the same object, to see whether or not they are merely colorable contrivances for evading that which has been before done."

Morley, 129 U.S. at 280 (quoting *Curtis* v. *Platt*, 3 Ch. Div. 135 (1863)).

The Court also referenced a unanimous decision of the English Court of Appeals that explained the policy behind this doctrine:

> [It] goes to the root of this case . . . that this is . . . a pioneer invention; and it is by the light of that . . . we ought to consider whether there have been variations or omissions, and additions, which prevent the machine which is complained of from being an infringement . . . With regard to the additions and omissions, it is obvious that additions may be an improvement, and that omissions may be an improvement; but the mere fact that there is an addition, or the mere fact that there is an omission, does not enable you to take the substance of the plaintiff's patent. The question is . . . whether what has been taken is the substance and essence of the invention.

Morley, 129 U.S. at 282 (quoting *Proctor* v. *Bennis*, 36 Ch. Div. 740 (1887)).

Federal courts were then advised that, henceforth, comparable protection would be provided under U.S. law, which would apply the doctrine of equivalents:

> [W]here an invention is one of primary character, and the . . . functions performed by the [invention] are, as a whole, entirely new, all subsequent inventions which employ substantially the same means to accomplish the same results are infringements, although the subsequent [inventions] may contain improvements in the separate mechanisms.

Morley, 129 U.S. at 273.

At that time, the Court primarily was concerned with protecting "breakthrough," "first-in-the-field" or "pioneer" patents,[4] although it authorized the federal courts also to afford discoveries and inventions of lesser import with some degree of protection:

> [The patentee] having been the first person who succeeded in producing an . . . [invention] is entitled to a liberal construction of . . . [a patent's] claims. . . . [The patentee] was not a mere improver upon a prior machine, which was capable of accomplishing the same result; in which case . . . [the] claims would properly receive a narrower interpretation. This principle is well settled in the patent law, both in this country and in England.

Morley, 129 U.S. at 273.

Several years later, when the Court specifically was asked whether "the doctrine of equivalents applied only to

---

[4] In *Westinghouse* v. *Boyden Power Brake Co.*, 170 U.S. 537, 561-62 (1898), the Court described the characteristics of a "pioneer" patent and provided specific examples:

> To what liberality of construction these claims are entitled depends to a certain extent upon the character of the invention, and whether it is what is termed in ordinary parlance a 'pioneer.' This word, although used somewhat loosely, is commonly understood to denote a patent covering a function never before performed, a wholly novel device, or one of such novelty and importance as to mark a distinct step in the progress of the art, as distinguished from a mere improvement or perfection of what had gone before. Most conspicuous examples of such patents are: The one to Howe of the sewing machine; to Morse of the electrical telegraph; and to Bell of the telephone.

primary patents," it announced the rule of law under which all patents subsequently have been issued: "the range of equivalents depends upon the extent and nature of the invention. . . . It was not meant to decide that only pioneer patents are entitled to invoke the doctrine of equivalents, but it was decided that the range of equivalents depends and varies on the degree of invention." *Continental Paper Bag Co.* v. *Eastern Paper Bag Co.*, 210 U.S. 405, 414-15 (1908) (internal citations omitted).

B. The Range Of Protection Afforded Under The Doctrine Of Equivalents Has Been Determined By The Qualitative Value Of The Discovery Or Invention To The Public.

The range of protection afforded under the doctrine of equivalents has been determined by the "degree of invention," *i.e.*, the qualitative value of the discovery or invention to the public. Federal courts typically begin this analysis by comparing new art disclosed against existing and prior art in a field. *See, e.g.*, *Consolidated Roller-Mill Co.* v. *Barnard & Leas Mfg. Co.*, 156 U.S. 261, 269 (1894) (distinguishing, in an unanimous opinion, between a patent that "supercedes prior art [from a pioneer patent] . . . entitled to that liberality of construction which would have been accorded to it had [the invention] been the first to devise a scheme for these several adjustments."); *Cimiotti Unhairing Co.* v. *American Fur Refining Co.*, 198 U.S. 399, 406 (1905) ("In determining the construction to be given to the claim . . . it is necessary to have in mind the nature of this patent, its character as a pioneer invention or otherwise, and the state of art at the time when the invention was made.").

The potential benefit of a discovery or invention to the public also has been expressed in terms of its "work

component." [5] At one end of this spectrum are discoveries or inventions that disclose teachings of basic and higher level and more abstract applied research. These are of the "highest value" to the public because they are the essential building blocks in the "Progress of Science and the Useful Arts," even though their immediate prospect for commercialization may be remote. Accordingly, such patents have been afforded preferential treatment in the law, manifested by broad claim construction and comprehensive protection under the doctrine of equivalents to prevent infringers from exploiting their value by making trivial and insignificant changes that contribute nothing of substance to the process of transforming knowledge and bringing basic and applied research within the reach of commercial realization. *See, e.g., Eibel Process Co.* v. *Minnesota & Ontario Paper Co.*, 261 U.S. 45, 63 (1923); *Continental Paper Bag Co., supra*; *Boyden Power Brake, supra at* 573 (Shira, J., dissenting). [6]

---

[5] The National Science Foundation characterizes research and development activities, based on their "work component," as defined by their benefit to the public, rather than sweat-of- the- brow: basic research; applied research; and development. *See R&D In Industry* at 1. Basic research is defined as "the pursuit of new scientific knowledge or understanding that does not have specific immediate commercial objectives, although in fields of interest or potential commercial interest." *Id.* at 178. Applied research is "investigation toward discovering new scientific knowledge that has specific commercial objectives with respect to products, processes, or services." *Id.* Development is "the systematic use of the knowledge or understanding gained from research directed towards the production of useful materials, devices, systems, or methods, including the design and development of prototypes and processes." *Id.*

[6] *See "Science and Technology Policy: Past and Prologue – A Companion to Science and Engineering Indicators – 2000,"* National Science Board, 2 (2000) (hereinafter *National Science Board Indicators 2000*) (emphasis in original) ("[T]echnologies that are likely to blossom in the 21st century recalls yesterday's basic research. History instructs that we cannot predict *which* discoveries or technologies will change the lives of future generations. Rather, fundamental science and engineering research presents long-term opportunities – a high risk investment with high payoffs.").

On the other hand, lesser degrees of protection have been afforded under the doctrine of equivalents depending on when an invention is disclosed in the development stage and whether commercialization already has been achieved. *See e.g., Boyden Power Brake Co., supra.*; Christina Y. Lai, *A Dysfunctional Formalism: How Modern Courts Are Undermining The Doctrine Of Equivalents*, 44 UCLA L. Rev. 2031, 2040-41 (1997) ("A pioneer invention lacks prior art and represents a large and risky investment by the inventor. Its reward should be commensurate to this risk. . . . By contrast, when the patented invention is itself an improvement in a crowded art . . . broad protection is not warranted. Development of an 'improvement' invention typically does not signify a major conceptual breakthrough and generally does not entail the same costs and risks as development of a pioneer [invention].").

A comparison of a patent's claims with art within its field or consideration of its "work component," however, are not the exclusive means to measure "the degree of invention" in an equivalence analysis. This Court has specifically endorsed consideration of other factors and provided federal courts with latitude to conduct a contextual analysis of the qualitative value of the discovery before determining whether infringement has occurred:

> [E]quivalenc[e] must be determined against the context of the patent, the prior art, and the particular circumstances of the case. Equivalence, in the patent law, is not the prisoner of a formula and is not an absolute to be considered in a vacuum . . . [and may include] [c]onsideration . . . to the purpose for which an ingredient is used in a patent, the qualities it has when combined with other ingredients, and the function which it is intended to perform.

Warner-Jenkinson, 520 U.S. at 24-25 (quoting *Graver Tank & Mfg. Co.* v. *Linde Air Prods. Co.*, 339 U.S. 605, 609 (1950)).

Thus, patents with the "highest value to the public," as well as those that "describ[e] a limited improvement in a crowded field," and all inventions between these two poles are afforded some degree of protection under the doctrine of equivalents, although the latter is entitled only to "a limited range of permissible equivalents." *Warner-Jenkinson*, 520 U.S. at 27 n.4.

None of these considerations, however, were afforded so much as a footnote in the majority decision in *Festo*, which fashioned indiscriminate and absolute rules that preclude federal courts from utilizing the doctrine of equivalents to determine whether non-literal infringement has occurred, without regard to a discovery or invention's contribution to the art within its field, "work component," or other factors relevant to a patent's qualitative value to the public. Instead, the record of the prosecution history regarding an amendment[7] is now the sole determinate of whether an invention may even be considered to be infringed under the doctrine of equivalents as a matter of law. This sleight of hand did not escape the attention of Circuit Court Judge Newman, who knew from her first-hand experience in private practice that: "It has been routine . . . for patent solicitors to initially present broad claims to an invention, in the expectation of honing the claims in interaction with the examiner. As very few patent applications traverse the PTO

[7] The *Festo* court held that "[w]hen no explanation for a claim amendment is established, no range of equivalents is available." *Festo*, 234 U.S. at 578. The court further held that the prosecution history must affirmatively establish that the amendment was not made for a patentability reason. *Festo*, 234 U.S. at 586. This has the effect of denying the doctrine of equivalents to patentees whenever the patentee did not meet this burden, which has been subsequently imposed on the patentee. Nor can this burden be met now since the file history is closed.

without amendment or argument, few issued patents will be free of the consequences of these changes in the law [advanced in the majority decision]." *Festo*, 234 F.3d at 638 (Newman, J., concurring in part, dissenting in part). Thus, as a practical matter, the majority decision in *Festo* denies almost all existing patent owners of the "safe harbor" provided by the doctrine of equivalents to protect their property from opportunistic infringers.

This Court was faithful to over two centuries of Anglo-American jurisprudence when it reminded the lower federal courts a few years ago of a continuing preference and "judicial recognition of so-called 'pioneer' patents," and reaffirmed the well-established rule that presumes non-literal infringement, as a matter of law, where there is "'equivalence' between the elements of the accused product or process, and the claimed elements of the patented invention." *Warner-Jenkinson*, 520 U.S. at 21 (quoting *Graver Tank*, 339 U.S. at 609). This Court also was faithful to principles of *stare decisis* when it restated the rule that: "What constitutes equivalency must be determined against the context of the patent, the prior art, and the particular circumstances of the case." *Id.* at 26 (quoting *Graver Tank*, 339 U.S. at 609). Most importantly, this Court remained faithful to the constitutional objective of promoting the "Progress of Science and the Useful Arts" when it reaffirmed: "Our prior cases have consistently applied prosecution history estoppel only where claims have been amended for a limited set of reasons, and we see no substantial cause for requiring a more rigid rule invoking an estoppel regardless of the reasons for a change." *Id.* at 32.

The contextual analysis of equivalence has afforded research universities and related non-profit institutions with the certainty and security of title essential to justify the transfer of their technology into the private sector for the benefit of the public. *See National Science Board Indicators 2000* at 6 ("Research universities have become not only incubators of innovation, but also partners in developing and

commercializing products that generate income and hold value for other sectors of the Nation's economy."). Under the restrictive and regressive rules recently announced by the majority decision in *Festo*, the public should not assume that it will continue to receive these benefits in the future.

For these reasons, this Court should overrule the judgment in *Festo* and reaffirm *Warner-Jenkinson*.

II. The Judgment In *Festo* Should Be Reversed Because It Undermines The Bayh-Dole Act.

Universities and related non-profit institutions conduct a significant portion of all basic and applied research performed in the United States as an integral part of their educational mission. *See The Bayh-Dole Act: A Guide To The Law And Implementing Regulations*, Council On Governmental Relations (1999) (hereinafter *Council on Governmental Relations Report*) <http://www.cogr.edu/bayh-dole.html >. Until the enactment of the Bayh-Dole Act in 1980, however, most of this research was not made available to private industry or otherwise commercialized. Both the academic and private sector viewed the prospect of licensing technology from governmental agencies as being too susceptible to the winds of policy to convey certainty and security of title. *See, e.g.*, Bremer Testimony at 243.[8]

[8] In addition, prior to the Bayh-Dole Act, fewer than 5% of the 28,000 patents issued to federal agencies were licensed for commercial use, primarily because those seeking to utilize federally-owned patents faced numerous regulatory barriers that made commercial development difficult, if not impossible. *See Technology Transfer: Administration of the Bayh-Dole Act By Research Universities*, United States Government Accounting Office Report to the Senate Committee on the Judiciary and the House Committee on the Judiciary (May 1998) (hereinafter *1998 GAO Report*) at 2.

The Bayh-Dole Act was enacted in 1980 to radically "reform U. S. patent policy related to government-sponsored research," by allowing universities and related non-profit institutions to obtain title to inventions discovered with federal funds, if commercialization was pursued through licensing and other relationships, primarily with small U.S. businesses. *See 1998 GAO Report* at 3. By that time, the Court had settled that federal courts should apply the doctrine of equivalents in a contextual manner to prevent non-literal infringement. *See Graver Tanker*, *supra*. Accordingly, this doctrine was a necessary component to provide the certainty and security of title required by academic and non-profit institutions to transfer their patents to the private sector. In addition, it provided the necessary incentive for the business community to license such technology, rather than developing identical technology after having the opportunity to study academic and non-profit discoveries and inventions. *See, e.g., Industrial Innovation and Patent and Copyright Law Amendments: Hearings Before the House Subcomm. on Courts, Civil Liberties, and the Administration of Justice*, 96th Cong., 2nd Sess., 105 (April 15, 1980) (statement of Donald R. Dunner, President, American Patent Law Association on H.R. 6033, H.R. 6934, H.R. 3806, H.R. 214 (President's Industrial Innovation Program)) ("[B]usinessmen of ordinarily high ethics dishonor patents . . . and indulge in self-help of . . . infringement-plus-a-long-drawn-out litigation, [if they are] secure in the knowledge that courts . . . [will not] find infringement to be deliberate.").

Technology transfer from the academic and non-profit community to the private sector that followed as a result of these settled expectations has fueled an unprecedented period of technological innovation of widespread benefit to the public:

> [U]niversities and their researchers . . . benefit . . . because they . . . receive royalties on their inventions. The government and

> public . . . benefit . . . because more government-funded technology . . . [is] being brought to those . . . that [can] make use of it. . . . [U]niversities are increasing their licensing activities and . . . revenues from licenses are growing. . . . [A]ctivities involving inventions have added to the economy in general. [Although] [s]uccess with inventions and licensing varied widely among the universities . . . most of them had at least one notable invention.

1998 GAO Report at 15.

In addition, licensing fees and other revenues derived from technology transfer have become an increasingly important source of funding for research activities conducted at universities and related non-profit institutions in the United States. *Id.* at 2. Although such revenues are far from adequate independently to support all such research, they are nevertheless an important and growing supplement to federal funds to continue new patent issuance and in the creation of start-up companies to generate new products and revenues to fund another cycle of innovation. *Id.* at 4, 9-10, 13-15.[9] App. 1a-23a.

Thus, the certainty and security of title afforded research universities and related institutions by the twin pillars of the doctrine of equivalents and the Bayh-Dole Act has "protect[ed] the right of scientists to continue to use and to build on a specific line of inquiry. This is fundamentally important to research-intensive institutions because . . . [it] is

[9] *See National Science Board Indicators 2000* at 5 ("[I]n an $8.8 trillion knowledge-based economy... given the extraordinary contributions of fundamental research to long term economic growth, an investment greater than the 22 percent of the total Federal R&D budget that currently goes to 'basic research' more than seems justified.").

the only way of ensuring that the institution will be able to accept funding from interested research partners in the future. This is a critically important benefit of the Bayh-Dole Act that is not widely understood . . . [which has] led to breathtaking advances in the medical, engineering, chemical, computing and software industries, among others." *Council on Governmental Relations Report* at 9-10.

The majority decision in *Festo,* however, did not even consider the importance of the doctrine of equivalents in providing the certainty and security of title essential for academic and non-profit institutions to transfer their patented technologies to the private sector. Thus, "the majority's new rigid rule[s] will effect a serious invasion of the patentee's security of receiving the full benefits of his invention and [are] likely to be a disincentive to early disclosure of new inventions and discoveries." *See Festo*, 234 F.3d at 629 (Linn, J., concurring in part, dissenting in part, in which Rader, J., joins). Accordingly, the judgment in *Festo* should be reversed.

III. The Judgment In *Festo* Should Be Reversed To Relieve Federal Courts From Having To Resolve A Potentially Divisive Constitutional Question.

A. The Majority Decision in *Festo* Adversely Affects Vested Property Rights.

There has never been any dispute that intellectual property is protected under the Fifth Amendment. *See, e.g.*, U.S. CONST., Art. I, § 8, cl. 8 (Congress may secure "the exclusive Right to . . . Discoveries"); 35 U.S.C. § 261 (2001); FEDERALIST No. 43 (James Madison) ("The copyright of authors has been solemnly adjudged, in Great Britain, to be a right of common law. The right to useful inventions seems with equal reason to belong to the inventors"); *see also Patent Policy: Hearings Before the Subcomm. on Science, Technology, and Space of the Senate Comm. on Commerce,*

Science, and Transportation, 96th Cong., 1st Sess., 281 (July 27, 1979) (statement of Tom Arnold, President, American Patent Law Association on S. 1215 "Science and Technology Research and Development Utilization Policy Act") ("The Constitution and the patent statute promised to the inventor . . . title to [the] invention, as it were, a piece of property.").

Property law delineates the boundaries of ownership; the right to exclude others from using property, however, is derived from the common law tort of trespass. Similarly, a patent's claims define the boundaries of ownership; but the right to preclude equivalent infringement is derived from the common law doctrine of equivalents. Thus, it has long been accepted that property and attendant rights in an invention include both what a patent's claims disclose and their substantial equivalent: "[Th]e thing entitled to protection . . . [is the "new mode" and] to copy the principle or mode of operation described, is an infringement, although such copy should be totally unlike the original in form or proportion . . . inventors [should] retain to their own use . . . what they themselves have created." *Winans* v. *Denmead*, 56 U.S. 330, 341-42 (1853). In short, the doctrine of equivalents focuses on what an inventor created as well as the language used to describe it. *See* Kurt L. Giltzenstein, *A Normative and Positive Analysis of the Scope of the Doctrine of Equivalents*, 7 Harv. J. Law & Tech. 281, 302 (1994).

By no longer affording a patent owner protection from insubstantial or colorable deviation or imitation, the majority decision in *Festo* adversely affects property rights vested at the time of patent issuance.

B. The Majority Decision In *Festo* Effects A Taking of Property.

In exchange for and in consideration of the disclosure of a trade secret describing a discovery or invention that advances the "Progress of Science and Useful Arts,"

Congress authorized the PTO to convey to the inventor for a "limited time" the privilege of a "public franchise . . . the exclusive right and liberty to make and use and vend to others [property and attendant rights] to be used as their own inventions[.]" *Seymour* v. *Osborne*, 78 U.S. 516, 533 (1870). The franchise covers both a discovery or invention, as well as its equivalent. *See Winans*, 56 U.S. at 342. The majority decision in *Festo*, however, substantially changes the terms of this franchise.

First, the scope of the patent is narrowed by requiring federal courts to invoke prosecution history estoppel whenever "a narrowing amendment [is] made for any reason related to the statutory requirements for a patent[.]" *Festo*, 234 F.3d at 566. Since almost all patents are amended during prosecution, however, an owner's ability to protect its property from non-literal infringement is only ephemeral at best. *See, e.g., Festo*, 234 F.3d at 638 (Newman, J., concurring in part, dissenting in part); Brief of *Amicus Curiae* of the Chamber of Commerce of the United States, *Festo* v. *Shoketsu Kinzoku Kogyo Kabushiki Co., Ltd.*, On Petition For Writ Of Certiorari (No. 00-1543) at 7 ("The value of a patent is inextricably linked to the patent owner's ability to enforce it. When the scope of enforcement rights is substantially narrowed, the value of patent portfolio assets is substantially diminished.").[10]

Second, the retroactive application of the majority decision in *Festo* precludes owners from receiving the full benefit of rights vested at issuance for the entire term of the

---

[10] *See, e.g., Mycogen Plant Science, Inc.* v. *Monsanto Co.*, 252 F.3d 1306 (Fed. Cir. 2001) (holding under *Festo* that prosecution history estoppel barred application of the doctrine of equivalents to all claims where the PTO examiner rejected a claim for indefiniteness and lack of enablement, even though that claim was replaced by limiting language acceptable to the examiner).

patent.[11] This will have a significant adverse impact on academic and non-profit institutions that actively license their patent technology. As a result of the new patent rights secured by the Bayh-Dole Act and protections afforded under the doctrine of equivalents, research universities in the United States received gross income in excess of $641 million in 1999. App. 7a. Related non-profit institutions, such as U.S. hospitals and research institutes, received an additional $16.4 million. App. at 8a. Although these licensing agreements generally run for the full term of the patent, many will be abrogated if the judgment in *Festo* is not overruled. *See Warner-Jenkinson*, 520 U.S. at 32 (determining that it would be improper to "change so substantially the rules of the game now [and] subvert to the various balances the PTO sought to strike when issuing the numerous patents which have not yet expired and which would be affected by our decision").

Thus, to the extent that research universities and related non-profit institutions are denied the financial benefit of the full term of their current licensing agreements, the majority decision in *Festo* will affect a taking of property, as Circuit Judge Michel recognized:

> [T]he majority's new rule, far from providing patentees the protections the Supreme Court has guaranteed, unfairly strips most patentees of the right to assert infringement under the doctrine of equivalents . . . [and] might most directly impact untold numbers of licensing agreements that are predicated on the assumption that patent claims with an amended limitation are still entitled to a

[11] *See* 35 U.S.C. § 154(a)(2), P.L. 103-465; § 532(a)(1) 108 Stat. 4983 (Dec. 8, 1994) (changing the term of a patent from 17 years from issuance to 20 years from filing).

> range of equivalents. Licensees will be tempted to exploit today's ruling. . . . A licensee could make a minor substitution of a known interchangeable element for an amended claim limitation, and then correctly claim that it is no longer practicing the patented -- and licensed -- invention. The licensor would then be powerless to enforce the license because the amended claim or claims simply would not cover the licensee's newly-modified product or process. . . . [T]oday's ruling will upset basic assumptions regarding the effective scope of patents, and will unfairly disrupt commercial relations based on these assumptions[.]

Festo, 234 F.3d at 616, 619 (Michel, J., concurring in part, dissenting in part, with whom Rader, J., joins).

Just two months ago, this Court in *Palazzolo* v. *Rhode Island*, 121 S. Ct. 2448, 2463 (2001), reaffirmed that where the government imposes a rule that "would work a critical alteration to the nature of property . . . the State may not by this means secure a windfall for itself." *See, e.g., Webb's Fabulous Pharmacies, Inc.* v. *Beckwith*, 449 U.S. 155, 164 (1980) ("[A] state, by *ipse dixit*, may not transform private property into public property without compensation."). If patent owners are denied the financial benefit of the full scope of their patents, a taking will be effected because the public already has received the benefit of the disclosure.

In her separate concurring opinion, Justice O'Connor also reminded the lower courts that:

> [W]e have eschewed "any 'set formula' for determining when 'justice and fairness' require that economic injuries caused by public action be compensated by the government, rather than remain

> disproportionately concentrated on a few persons." The outcome instead "depends largely 'upon the particular circumstances.'" . . . Evaluation of the degree of interference with investment-backed expectations instead is one factor that points toward the answer to the question whether the application of a particular [rule] to particular property "goes too far."

Palazzolo, 121 S. Ct. at 2466 (O'Connor, J., concurring) (quotations in original and internal citations omitted). Thus, although investment-backed expectations are not determinative of whether a taking has occurred, nevertheless, they are important in takings analysis and, in the instant case, a compelling factor.

The view that property law may be changed by the courts at will and made prospective, as the Court held in *Great Northern Railway Co.* v. *Sunburst Oil & Refining Co.*, 287 U.S. 358 (1932), conflicts with earlier decisions of the Court[12] and has been eroded by more recent decisions. *See, e.g.*, *General Motors Corp.* v. *Romein*, 503 U.S. 181, 191 (1992) (retroactive application of the law presents constitutional problems "because it can deprive citizens of legitimate expectations and upset settled transactions."); *Eastern Enterprises* v. *Apfel*, 524 U.S. 498, 528-29 (1998) (O'Connor, J., plurality opinion) (governmental action "might be unconstitutional [as a taking] if it imposes severe retroactive liability on a limited class of parties that could not

[12] *See, e.g., Chicago, Burlington & Quincy Railroad* v. *City of Chicago*, 166 U.S. 226, 233-35 (1897) (holding that the protections of the "Just Compensation" Clause apply to judicial action); *Muhlker* v. *New York & Harlem Railroad Co.*, 197 U.S. 544, 568 (1905) (McKenna, J., plurality opinion) (observing that courts should not be allowed to strip owners of property rights by overruling prior precedent).

have anticipated the liability, and the extent of that liability is substantially disproportionate to the parties experience.").[13]

By reversing the judgment in *Festo*, this Court will relieve federal courts from having to resolve a potentially divisive constitutional question regarding the "Just Compensation Clause" of the Fifth Amendment. *See* Barton H. Thompson, Jr., *Judicial Takings*, 76 Va. L. Rev. 1449 (1990) ("[T]here is no justification for exempting the judiciary from those property protections that are necessary where other branches of government are concerned . . . in ways relevant to takings protections, courts are not always substantially different from the other branches of government.").

IV. The Judgment In *Festo* Should Be Reversed Because Congress Is The Proper Forum To Resolve Policy Differences Concerning Patent Law.

This Court clearly recognizes that "Congress can legislate the doctrine of equivalents out of existence any time it chooses . . . policy arguments . . . are thus best addressed to Congress, not this Court." *Warner-Jenkinson*, 520 U.S. at 28. The majority decision in *Festo*, however, is the result of distinct policy preferences and untested assumptions: "[U]nder the complete bar approach, technological advances that would have lain in the unknown, undefined zone around the literal terms of a narrowed claim under the flexible bar approach will not go unwasted and undeveloped due to fear of litigation. . . . This certainly will stimulate investment in

[13] Moreover, in light of the fact that there is nothing a patent owner can now do today to avoid application of the strict rule advanced by the majority decision in *Festo*, it also offends constitutionally protected notions of fairness. *See Eastern Enterprises*, 524 U.S. at 549 (Kennedy, J., concurring in part, dissenting in part) (the "degree of retroactive effect" is a "significant determinant in assessing constitutionality [under the Due Process Clause].").

improvements and design-around because the risk of infringement will be easier to determine." *Festo*, 234 F.3d at 577.

The speculative benefits to be gained by eviscerating the doctrine of equivalents, according to the majority decision in *Festo,* however, stand in stark contrast to the public record evidencing the dramatic rise in technological advance and economic stimulus made possible by the time-tested application of that doctrine:

- Annually $30 billion of economic activity is generated from the commercialization of new technologies from academic institutions, supporting 250,000 jobs and creating over 2,200 new companies since 1980.

- 70% of the active licenses from research university patent and licensing efforts are in life –sciences, including: artificial lung surfactant used by newborn infants; cisplatin and carboplatin cancer therapeutics; Citracal® calcium supplements; Haemopohilus B conjugate vaccine; metal alkoxide process for taxol production; Neuprogen® used with chemotherapy; the process for inserting DNA into eucaryotic cells and for producing proteinacous materials; recombinant DNA technology, central to the biotechnology industry; and TRUSOPT® (dorzolmide) opthalmic drops used by glaucoma patients -- just to name a few.

See Council on Governmental Relations Report at 8.

This innovation took place in an environment where the law was settled. Yet, the majority decision in *Festo* concludes that the "state of the law regarding the scope of equivalents . . . is . . . 'unworkable,'" without an *iota* of

empirical evidence evidencing how that is so. *See Festo*, 234 F.3d at 575.

Federal courts often are required to conduct a contextual analysis in other fields of law, including those concerning intellectual property. For example, "fair use" and "substantial similarity" determinations in copyright require federal courts to weigh and balance a number of factors in determining whether infringement has occurred. *See, e.g., Harper & Row, Publishers, Inc.* v. *Nation Enterprises*, 471 U.S. 539, 560 (1985) (holding that fair use must be determined on a case-by-case basis and is not susceptible to a single, uniform definition "since the doctrine is an equitable rule . . . each case raising the question must be decided on its own facts."); *Computer Assoc. Int'l, Inc.* v. *Altai, Inc.*, 982 F.2d 693 (2d Cir. 1992) (Walker, J.) (applying an "abstraction-filtration-comparison" test to determine whether there was non-literal infringement of a computer software program). The majority decision in *Festo* suggests no reason why federal courts are unable to conduct a similar contextual case-by-case analysis to determine whether non-literal infringement has occurred in patent infringement cases, other than the simplicity that a "bright line standard" offers imitators, at the expense of genuine innovators.

This Court should know that the adverse impact of the rigid rule in *Festo* disproportionately will fall on *amici curiae*, because their research and development activities are inherently more oriented to basic and applied research where patent claims necessarily are drafted broadly given the dearth of prior art and then narrowed during prosecution, as the examiner becomes more comfortable with the nature of the discovery or invention. Thus, as Circuit Court Judge Linn warns, "[T]he majority's new bright line rule, . . . [will tend to limit amendments] for a statutory purpose to their literal terms. This is likely to encourage insubstantial changes to an established product, rather than investment in break-through technological advances." *Festo*, 234 F.3d at 627 (Linn, J., concurring in part, dissenting in part, in which Rader, J.,

joins). This is, of course, contrary to the majority's reasoning that limiting the doctrine of equivalents only for patents issued without amendments will encourage so-called "inventing around." To the contrary, it will only encourage insubstantial changes or minor improvements over prior art that will do little to promote the "Progress of Science and the Useful Arts." U.S. CONST. Art. I, § 8, cl. 8. In this respect, the majority decision in *Festo* imitates Japanese patent law, departing from the moorings of over 200 years of Anglo-American jurisprudence.[14] Whether U.S. patent law should be harmonized in this manner clearly should be left for Congress to determine, not the federal judiciary.

In 1980, the Congress considered the question: "[I]n whose hands will the vestiture of primary rights to an invention serve to transfer the inventive technology most quickly to the public for its use and benefit?" *See* Bremer Testimony at 240. Congress answered that question by enacting the Bayh-Dole Act, which this Court should not undermine by reducing the protections afforded U.S. patent owners under the doctrine of equivalents, unless and until Congress advises this Court otherwise.

For these reasons, the judgment in *Festo* should be overruled.

---

[14] *See* Nancy J. Linck and John E. McGarry, *Patent Procurement and Enforcement in Japan – A Trade Barrier*, 27 GW J. Int'l L. & Econ. 411 (1993-1994) ("[T]he U.S. legal system rewards entrepreneurs and innovators through the grant of exclusive rights to implement their inventions for limited periods of time. In contrast, . . . the Japanese legal system promotes the sharing of technology among competitors and discourages patent litigation. . . . Hence the Japanese patent system is biased towards small incremental improvements and is typically biased against the patenting of pioneer inventions . . .which are usually technologically important." *Id.* at 413-14, 418. "The Japanese Patent Office tends to limit applications to demonstrated improvements and to a scope of protection determined by specific disclosed examples or factors. Japanese courts accordingly enforce this limitation." *Id.* at 414.) (Ms. Linck formerly was the Solicitor of the PTO).

CONCLUSION

This Court should reverse the judgment in *Festo* and once again affirm the continued vitality of the doctrine of equivalents.

Respectfully submitted,

SUSAN G. BRADEN
Counsel of Record
KEVIN M. O'BRIEN
MICHAEL E. MURPHY
RONALD D. TRICE
Baker & McKenzie
815 Connecticut Avenue, N.W.
Washington, D.C. 20006
(202) 452-7075

Counsel for Amicus Curiae

Association of University Technology Managers, Inc. Licensing Survey: FY 1991-1999
Summary Chart of Selected Data From U.S. Universities

U.S. UNIVERSITIES:								
Year	FY 1991-1999 Total Sponsored Research Expenditures	FY 1991-1999 Invention Disclosures Received	FY 1991-1999 Total U.S. Patent Applications Filed	FY 1991-1999 U.S. Patents Issued	FY 1991-1999 Licenses & Options Yielding License Income	FY 1991-1999 Licenses & Options Executed	FY 1991-1999 Adjusted (*) Gross License Income Received	FY 1991-1999 Start-up Companies Formed
1991	$11,479,381,778	4,880	1,926	NA	2,210	1,079	$129,981,898	NA
1992	12,799,045,236	5,700	2,339	NA	2,809	1,461	172,359,459	NA
1993	14,875,677,330	6,598	3,099	1,307	3,413	1,737	242,269,815	NA
1994	16,058,664,323	6,697	3,477	1,596	3,560	2,049	265,932,578	NA
1995	17,211,913,185	7,427	5,100	1,550	4,272	2,142	299,148,128	NA
1996	18,688,253,796	8,119	3,872	1,776	4,958	2,209	365,218,642	184
1997	19,858,137,796	9,051	5,591	2,239	5,659	2,707	482,793,071	258
1998	21,386,650,472	9,555	6,518	2,681	6,006	3,078	576,889,538	279
1999	23,565,568,068	10,052	7,612	3,079	6,663	3,295	641,000,108	275
TOTALS:	**$155,923,291,976**	**68,071**	**39,526**	**14,228**	**39,542**	**19,749**	**$3,175,593,237**	**996**

Association of University Technology Managers, Inc. Licensing Survey: FY 1991-1999
Summary Chart of Selected Data From U.S. Hospitals & Research Institutes

U.S. HOSPITALS & RESEARCH INSTITUTES:								
Year	FY 1991-1999 Total Sponsored Research Expenditures	FY 1991-1999 Invention Disclosures Received	FY 1991-1999 Total U.S. Patent Applications Filed	FY 1991-1999 U.S. Patents Issued	FY 1991-1999 Licenses & Options Yielding License Income	FY 1991-1999 Licenses & Options Executed	FY 1991-1999 Adjusted (*) Gross License Income Received	FY 1991-1999 Start-up Companies Formed
1991	$802,177,881	472	416	NA	268	119	$45,255,639	NA
1992	902,266,306	577	438	NA	315	192	60,233,269	NA
1993	1,507,164,756	772	539	173	409	252	73,969,108	NA
1994	1,465,486,884	749	575	168	491	211	85,560,310	NA
1995	1,749,635,279	974	952	146	586	247	116,740,155	NA
1996	1,867,573,130	860	578	199	676	279	135,037,920	15
1997	1,771,914,820	987	690	277	735	361	129,322,500	16
1998	1,862,171,661	965	794	407	828	316	110,213,653	26
1999	2,110,957,455	1,106	801	398	957	355	150,148,745	17
TOTALS:	**$14,039,348,164**	**7,454**	**5,775**	**1,768**	**5,257**	**2,324**	**$906,481,299**	**74**

Association of University Technology Managers, Inc. Licensing Survey: FY 1999

U.S. UNIVERSITIES:

Name of Institution	FY 1999 Total Sponsored Research Expenditures	FY 1999 Invention Disclosures Received	FY 1999 Total U.S. Patent Applications Filed	FY 1999 U.S. Patents Issued	FY 1999 Licenses & Options Yielding License Income	FY 1999 Licenses & Options Executed	FY 1999 Adjusted (*) Gross License Income Received	FY 1999 Start-up Companies Formed
University of California Systems	$1,864,901,000	818	670	281	715	219	$74,133,000	13
Johns Hopkins University	$1,010,088,334	250	256	111	137	106	$10,353,453	7
Massachusetts Inst. of Technology (MIT)	$725,600,000	381	341	154	346	95	$16,131,334	17
Univ. of Michigan	$499,722,000	158	147	56	90	42	$3,472,671	2
Univ. of Washington/Wash. Res. Fndtn.	$479,654,994	226	114	36	185	115	$27,878,900	NA
Univ. of Pennsylvania	$477,000,000	244	151	82	55	57	$2,984,000	6
W.A.R.F./Univ. of Wisconsin-Madison	$421,600,000	278	162	79	191	106	$18,011,400	4
Univ. of Minnesota	$417,556,493	219	99	55	153	71	$5,662,088	5
Stanford University	$417,037,000	236	237	90	339	147	$27,699,355	19
North Carolina State University	$413,369,278	148	62	30	60	83	$7,761,000	8
SUNY Research Foundation	$405,238,284	201	123	53	149	46	$13,538,619	3
Texas A&M University System	$402,203,000	145	85	19	155	53	$5,180,510	0
Harvard University	$401,849,500	109	186	72	166	48	$9,886,404	2
Penn State University	$393,462,000	188	231	46	64	40	$2,830,448	3
Cornell Research Fndtn., Inc.	$376,784,000	172	147	70	199	150	$6,070,000	4
Univ. of Illinois, Urbana, Champaign	$358,247,000	104	53	14	84	39	$2,856,207	4
Duke University	$334,505,814	115	111	43	73	41	$1,566,195	2
Washington University	$333,196,000	104	78	39	107	114	$6,999,971	4
Univ. of Colorado	$331,579,000	79	63	27	10	10	$3,127,303	1
Univ. of Arizona	$320,244,777	97	40	8	31	11	$314,299	3
Yale University	$315,953,000	70	110	37	28	23	$40,695,606	3
Univ. of Pittsburgh	$311,200,000	107	70	30	23	16	$608,851	3
Univ. of Florida	$280,408,217	136	127	58	45	10	$21,649,577	2
Columbia University	$279,275,674	182	109	77	212	98	$89,159,556	5
Univ. of Iowa Research Fndtn.	$259,514,262	79	83	32	80	21	$3,464,565	2
Univ. of Texas at Austin	$258,122,000	81	49	17	24	31	$1,929,390	1
Ohio State University	$257,950,000	100	35	18	34	26	$1,626,000	0
Univ. of Southern California	$254,811,651	156	101	13	55	57	$450,568	4
Purdue Research Foundation	$253,018,364	102	81	24	201	76	$2,149,000	4
Baylor College of Medicine	$239,000,000	89	39	25	110	35	$12,280,879	0
Univ. of Georgia	$237,493,000	72	44	21	64	32	$3,208,427	5
Northwestern University	$236,668,615	80	71	35	38	14	$2,758,450	0

Association of University Technology Managers, Inc. Licensing Survey: FY 1999

U.S. UNIVERSITIES:

Name of Institution	FY 1999 Total Sponsored Research Expenditures	FY 1999 Invention Disclosures Received	FY 1999 Total U.S. Patent Applications Filed	FY 1999 U.S. Patents Issued	FY 1999 Licenses & Options Yielding License Income	FY 1999 Licenses & Options Executed	FY 1999 Adjusted (*) Gross License Income Received	FY 1999 Start-up Companies Formed
Georgia Institute of Technology	$223,641,675	127	143	23	46	18	$2,038,078	3
Univ. of Missouri System	$212,238,803	62	37	22	21	16	$1,544,985	1
Indiana University (ARTI)	$209,154,093	59	38	18	39	14	$1,040,092	1
Michigan State University	$207,912,000	85	82	63	48	33	$23,711,867	1
Univ. of Massachusetts, All Campuses	$206,382,231	112	NA	32	41	19	$4,105,000	2
Emory University	$205,600,000	89	50	44	35	13	$15,257,565	4
Univ. of North Carolina/Chapel Hill	$198,081,333	116	74	41	47	70	$1,696,786	0
Univ. of Virginia Patents Fndtn.	$197,046,500	154	155	23	62	25	$4,185,446	6
Iowa State University	$186,700,000	160	106	49	298	163	$1,812,870	2
Univ. of Rochester	$185,488,000	85	53	14	17	5	$2,994,170	1
Univ. of Maryland, College Park	$185,036,200	84	113	12	109	61	$968,144	3
Univ. of Utah	$182,753,466	172	98	40	58	25	$3,257,026	8
Univ. of Texas Southwestern Med. Ctr.	$179,709,069	80	63	27	57	23	$4,856,751	1
Case Western Reserve University	$176,519,336	59	37	17	16	10	$505,192	3
Univ. of Miami	$175,600,000	27	9	8	22	9	$432,937	0
Univ. of Illinois at Chicago	$175,093,000	61	35	13	45	20	$1,839,290	2
Univ. of Alabama/Birmingham	$171,831,840	121	113	24	58	40	$1,560,587	2
Univ. of Tennessee Research Corp.	$170,896,000	75	54	17	24	7	$602,053	1
Virginia Tech Intellectual Properties, Inc.	$169,250,000	65	58	37	74	41	$1,328,343	3
Carnegie Mellon University	$167,675,342	104	36	30	51	23	$5,892,284	5
Univ. of Kansas	$167,575,000	67	22	10	39	7	$885,000	1
Rutgers, The State University of NJ	$165,872,573	112	103	31	73	60	$4,304,616	3
Vanderbilt University	$165,200,000	87	51	17	44	31	$1,100,579	2
Univ. of Chicago-ARCH Dev. Corp.	$162,805,000	65	74	33	40	14	$1,868,392	1
Univ. of South Florida	$161,300,000	48	53	24	18	13	$490,408	8
Univ. of Hawaii	$151,809,406	41	36	11	19	0	$171,877	0
California Institute of Technology	$150,000,000	143	212	62	35	21	$6,500,000	6
New York University	$149,000,000	50	NA	30	18	NA	$10,700,000	2
Univ. of New Mexico/Sci. & Tech. Corp.	$148,600,000	47	53	15	9	3	$400,200	2
Colorado State University	$147,664,283	30	17	13	18	9	$386,990	4
Wayne State University	$147,000,000	39	18	18	12	3	$458,000	1
Oregon State University	$145,665,138	38	25	6	45	17	$825,283	1
Boston University	$142,515,956	56	52	22	18	17	$263,095	7

Association of University Technology Managers, Inc. Licensing Survey: FY 1999

U.S. UNIVERSITIES:

Name of Institution	FY 1999 Total Sponsored Research Expenditures	FY 1999 Invention Disclosures Received	FY 1999 Total U.S. Patent Applications Filed	FY 1999 U.S. Patents Issued	FY 1999 Licenses & Options Yielding License Income	FY 1999 Licenses & Options Executed	FY 1999 Adjusted (*) Gross License Income Received	FY 1999 Start-up Companies Formed
Florida State University	$132,664,855	23	15	5	14	8	$57,313,014	1
Univ. of Maryland, Baltimore	$131,484,606	62	44	12	16	7	$116,681	2
Univ. of Nebraska-Lincoln	$131,046,000	32	28	9	24	8	$796,894	2
Mount Sinai School of Medicine of NYU	$123,404,735	36	35	9	14	12	$1,012,061	0
Univ. of Cincinnati	$115,025,000	47	36	6	16	15	$3,905,945	4
Virginia Commonwealth University	$113,000,000	88	68	14	21	17	$459,200	3
Univ. of Texas Houston Hlth. Sci. Ctr.	$107,035,788	20	12	6	9	8	$343,050	0
Univ. of Connecticut	$105,800,000	45	32	11	10	12	$481,134	2
Princeton University	$102,000,000	60	61	26	20	14	$1,480,000	2
Clemson University	$99,340,766	29	7	2	10	7	$4,648,141	1
Tufts University	$98,567,533	51	32	11	21	12	$506,149	0
Oklahoma State University	$88,900,000	19	9	4	7	1	$154,946	0
Tulane University	$87,324,000	13	17	7	19	9	$7,572,483	0
Oregon Health Sciences University	$86,822,525	32	45	15	32	11	$291,131	1
Univ. of Oklahoma-All Campuses	$85,584,836	30	45	8	7	6	$110,265	2
Thomas Jefferson University	$85,400,000	87	80	27	24	17	$742,515	1
Univ. of Texas Medical Branch	$85,000,000	30	38	21	10	4	$108,857	0
Univ. of Kentucky Research Fndtn.	$83,743,077	65	32	24	NA	9	$2,496,786	2
Medical Univ. of South Carolina	$81,246,129	40	24	8	11	5	$121,627	3
Dartmouth College	$81,055,083	18	26	20	47	7	$491,302	0
Auburn University	$80,544,000	25	13	12	6	5	$186,738	0
Utah State University	$80,539,784	27	7	6	15	4	$227,929	1
Univ. of Texas Hlth Sci Ctr San Antonio	$80,020,875	21	41	13	32	14	$3,660,638	0
Wake Forest University	$78,351,866	36	19	3	9	6	$2,788,987	1
Brown University Research Fndtn.	$76,330,000	40	36	17	13	4	$1,009,516	1
Univ. of South Carolina	$69,819,000	36	26	4	12	7	$175,187	0
Univ. of Delaware	$64,872,678	20	29	3	8	4	$470,303	2
Univ. of Arkansas, Fayetteville	$63,110,717	26	21	13	21	2	$259,883	1
New Mexico State University	$63,037,606	12	10	2	3	3	$1,792	0
West Virginia University	$62,000,000	9	3	2	5	1	$41,800	0
Arizona State University	$60,091,584	49	47	12	18	11	$1,274,145	1
Univ. of New Hampshire	$60,015,544	6	5	0	5	6	$34,696	0
Univ. of Oregon	$58,616,598	9	11	5	20	10	$232,000	1

Association of University Technology Managers, Inc. Licensing Survey: FY 1999

U.S. UNIVERSITIES:

Name of Institution	FY 1999 Total Sponsored Research Expenditures	FY 1999 Invention Disclosures Received	FY 1999 Total U.S. Patent Applications Filed	FY 1999 U.S. Patents Issued	FY 1999 Licenses & Options Yielding License Income	FY 1999 Licenses & Options Executed	FY 1999 Adjusted (*) Gross License Income Received	FY 1999 Start-up Companies Formed
Univ. of Louisville	$53,258,000	30	9	2	4	3	$48,632	1
Kansas State University Research Fndtn.	$52,597,214	28	16	12	31	7	$258,063	2
Univ. of Vermont	$52,500,000	25	11	2	3	6	$338,000	0
Idaho Research Fndtn./Univ. of Idaho	$50,345,178	18	7	3	6	2	$140,500	0
Montana State University	$49,741,400	15	12	7	18	7	$243,700	1
Temple University	$45,456,670	19	NA	NA	16	5	$493,947	0
North Dakota State University	$44,696,000	23	6	4	38	7	$1,059,797	0
Rice University	$44,500,000	20	33	1	4	8	$21,000	1
Louisiana State University, Agric. Ctr.	$44,318,252	17	7	3	17	7	$1,091,787	1
Univ. of North Dakota	$43,131,073	2	1	0	0	0	$0	0
Brandeis University	$42,666,882	17	18	9	21	6	$120,126	3
New Jersey Institute of Technology	$42,500,000	35	8	4	3	2	$22,500	0
Univ. of Houston	$42,002,331	40	7	5	8	5	$120,831	0
Univ. of Maine	$41,453,000	6	3	4	0	2	$0	0
Univ. of Rhode Island	$41,400,000	12	7	3	10	11	$823,385	0
San Diego State University	$40,624,000	7	3	1	2	4	$82,000	2
Syracuse University	$39,500,000	10	4	5	16	1	$112,529	0
Univ. of Dayton	$37,039,132	28	9	8	5	2	$567,535	1
George Mason University	$32,376,000	13	11	3	1	0	$753	0
Loyola University Medical Center	$29,778,103	4	3	0	10	10	$567,500	0
Michigan Technological University	$28,073,860	20	11	2	18	11	$222,272	0
St. Louis University	$27,817,000	19	15	6	22	3	$788,472	0
Univ. of South Alabama	$27,252,916	5	11	6	3	0	$7,178	0
Creighton University	$25,700,000	17	3	2	4	2	$123,717	0
Lehigh University	$25,312,458	NA	NA	NA	7	NA	$117,661	NA
Southern Illinois Univ./Carbondale	$23,655,654	15	6	NA	9	6	$48,245	0
Kent State University	$23,472,249	12	5	4	7	3	$147,159	1
Univ. of Montana	$22,996,357	5	2	2	4	3	$67,000	0
New York Medical College	$22,821,758	16	3	3	8	3	$87,589	2
Wright State University	$22,753,000	2	1	1	6	4	$18,525	0
Univ. of New Orleans	$22,297,000	6	6	2	2	1	$13,770	0
Univ. of Maryland, Baltimore County	$21,854,000	26	9	6	2	1	$39,117	0
Univ. of Maryland Biotech Institute	$20,387,312	17	14	4	2	4	$335,000	0

Association of University Technology Managers, Inc. Licensing Survey: FY 1999

U.S. UNIVERSITIES:

Name of Institution	FY 1999 Total Sponsored Research Expenditures	FY 1999 Invention Disclosures Received	FY 1999 Total U.S. Patent Applications Filed	FY 1999 U.S. Patents Issued	FY 1999 Licenses & Options Yielding License Income	FY 1999 Licenses & Options Executed	FY 1999 Adjusted (*) Gross License Income Received	FY 1999 Start-up Companies Formed
Brigham Young University	$17,226,876	71	12	4	51	21	$3,961,971	1
Ohio University	$16,492,896	13	8	4	3	0	$617,805	0
Univ. of Northern Iowa	$13,148,015	0	2	2	1	0	$1,268	0
Medical College of Ohio	$11,895,179	7	2	6	6	0	$22,991	0
Portland State University	$11,735,117	3	0	0	0	0	$0	0
California State Polytechnic University	$11,575,000	1	2	1	2	2	$10,000	0
Univ. of Akron	$10,193,500	29	20	11	15	7	$244,056	1
East Carolina University	$8,360,000	10	6	2	0	1	$76,000	0
TOTALS:	**$23,565,568,068**	**10,052**	**7,612**	**3,079**	**6,663**	**3,295**	**$641,000,108**	**275**

Association of University Technology Managers, Inc. Licensing Survey: FY 1999

U.S. HOSPITALS AND RESEARCH INSTITUTES: Name of Institution	FY 1999 Total Sponsored Research Expenditures	FY 1999 Invention Disclosures Received	FY 1999 Total U.S. Patent Applications Filed	FY 1999 U.S. Patents Issued	FY 1999 Licenses & Options Yielding License Income	FY 1999 Licenses & Options Executed	FY 1999 Adjusted (*) Gross License Income Received	FY 1999 Start-up Companies Formed
Massachusetts General Hospital	$247,034,000	174	170	85	60	40	$6,603,343	4
Mayo Foundation	$240,500,000	119	72	31	124	31	$4,361,548	0
Brigham & Women's Hospital	$196,289,000	81	70	26	70	28	$3,149,675	4
M.D. Anderson Cancer Center	$155,126,396	67	36	20	60	17	$3,169,420	0
Fred Hutchinson Cancer Res. Ctr.	$141,372,000	26	12	14	75	21	$2,103,483	2
Beth Israel Deaconess Medical Ctr.	$117,327,557	63	41	29	32	21	$1,171,033	3
Sloan Kettering Institute for Cancer Res.	$100,982,132	36	24	7	44	22	$43,065,502	1
Dana-Farber Cancer Institute	$94,477,120	47	22	33	65	21	$2,268,182	0
Children's Hospital, Boston	$85,000,000	75	82	27	30	13	$2,616,923	1
Health Research, Inc.	$75,800,000	19	7	14	35	7	$6,996,742	0
St. Jude Children's Research Hospital	$73,778,337	32	16	6	43	16	$619,921	0
Medical College of Wisconsin	$72,500,000	10	6	3	20	9	$469,265	1
City of Hope National Medical Ctr.	$65,890,000	40	31	10	24	0	$23,752,074	0
Woods Hole Oceanographic Inst.	$62,118,319	1	0	0	2	0	$118,300	0
Children's Hospital of Philadelphia	$58,348,000	21	15	2	7	4	$101,160	0
Children's Hospital, Cincinnati	$55,419,771	20	12	2	9	3	$315,459	0
Fox Chase Cancer Center	$54,242,489	31	23	2	26	37	$331,676	1
Salk Institute	$51,416,000	45	38	21	68	23	$2,521,687	0
National Jewish Med. And Res. Ctr.	$34,234,123	9	12	7	18	3	$510,864	0
Wistar Institute	$23,974,000	10	33	7	53	15	$2,482,000	0
Oklahoma Medical Research Fndtn	$23,777,502	17	19	5	20	2	$586,988	0
Hospital for Special Surgery	$18,515,000	8	5	2	9	0	$5,587,603	0
Institute of Paper Science and Tech.	$15,599,000	17	11	4	0	2	$0	0
New York Blood Center	$14,000,000	9	NA	14	30	6	$35,000,000	0
California Pacific Medical Ctr. Res. Inst.	$12,751,706	4	1	0	0	0	$0	0
Schepens Eye Research Institute	$10,599,003	6	7	3	3	0	$125,375	0
Torrey Pines Inst. For Molecular Studies	$5,386,000	2	2	3	1	8	$125,000	0
St. Elizabeth's Medical Center of Boston	$4,500,000	6	5	1	0	3	$0	0
Cleveland Clinic Foundation	NA	111	29	20	29	3	$1,995,522	0
TOTALS:	**$2,110,957,455**	**1,106**	**801**	**398**	**957**	**355**	**$150,148,745**	**17**

OVERVIEW OF RESEARCH, DEVELOPMENT, AND TECHNOLOGY TRANSFER ACTIVITIES OF AMICUS CURIAE

Wisconsin Alumni Research Foundation ("WARF") was established as a non-profit entity to promote, encourage, and aid scientific investigation and research at the University of Wisconsin-Madison. To achieve this goal, its primary activities include promoting innovation, managing patents, and funding research. Founded in 1925, among its first actions was to patent Professor Harry Steenback's breakthrough discoveries in vitamin D. In 1927, WARF granted its first license for vitamin D supplements, which ultimately led to the worldwide elimination of rickets by the 1940's. Today, among WARF's most important patents are: the blood anticoagulant Warfarin; a coding process making pills easier to swallow; treatments for osteoporosis and cancer; magnetic resonance techniques; and a discovery known as the "Wisconsin Solution" that prolongs the use of transplant organs. All of WARF's 3,000 discoveries are administered with a commitment to continuing research, public education, and vigilance in protecting the public interest by enforcing quality control and preventing the unscrupulous exploitation of technologies.

The Regents Of The University Of California provides for technology transfer from ten campuses and five medical schools in the State, and three national laboratories operated by the University system on behalf of the U.S. Department of Energy. Currently, there are more than 3,000 ongoing research projects supervised by 13,000 principal investigators. These efforts in the last ten years have led to three Nobel laureates in a long list of pioneering research discoveries in biochemistry, bioengineering, cell biology, disease procedures, developmental biology, endocrinology, genetics, immunology, neurobiology, oral biology, pharmacy, and pharmacology. Examples of specific discoveries

include: the Cohen Boyer process for gene splicing (a co-invention of Stanford University and the University of California San Francisco ("UCSF")); the Hepatitis B vaccine (UCSF); a human growth hormone; and a method to treat aneurysms by use of a catheter instead of opening the skull (UCLA). UCSF also has contributed to cochlear implants to help the hearing impaired. UC Davis has contributed to a method detecting feline immune deficiency virus. Lawrence Livermore National Laboratory has contributed to a method for detecting chromosome abnormalities, now successfully commercialized through FDA approvals to a company dedicated to the technology. UC Irvine has contributed to a laser system to enhance treatment of skin conditions. UC Riverside has contributed to a new phosphorus fertilizer. UC Berkeley and UC San Diego have contributed to fluorescence detection systems used in manipulation of cells. UC Santa Barbara has contributed to a new atomic force microscope.

Massachusetts Institute Of Technology ("MIT") is a private, non-profit university, that includes Lincoln Laboratory, which has pioneered advanced electronics since its origin in 1951. MIT-Lincoln Laboratory has a long history of technology transfer application in the defense and civilian sectors, MIT-Lincoln Laboratory has produced nearly 500 patents and given birth to over 800 high-technology companies, which today are at the forefront of such diverse industries as multi-media software services, advance semi-conductor lithography, and medical services. For example, neurotechnology, based on a military target recognition techniques, is now used to detect abnormal pre-cancerous cells in Pap smears. Another neural network application uses image classification techniques to conduct risk assessment for bypass surgery in cardiovascular disease patients. In the area of binary optics, MIT Lincoln Laboratory has licensed the design and manufacture molds for implantable binary lenses and adaptive nulling for processing radar systems used in the support of hypothermic

treatment of tumors. Other radar technologies soon will be applied in FDA-approved Phase II clinical trials for the treatment of breast cancer. One of the newest research and industry partnerships initiated at MIT, includes the Center for Biomedical Engineering ("CBE"). The mission of CBE is to combine engineering with molecular and cellular biology to develop new approaches to biotechnology and foster research in this rapidly growing discipline. CBE has 45 faculty members from the Departments at MIT's Schools of Engineering and Science, the Whitehead Institute, Harvard and Boston University Medical Schools, and the Harvard-MIT Division of Health Sciences and Technology. Among the research accomplishments this past year include new developments in neural tissue engineering used to encapsulate cells such as neurons and chondrocytes.

Washington Research Foundation ("WRF") assists Washington State University research institutions with emerging technologies, through intellectual property management and start-up investment activities, primarily with local private technology companies. The University of Washington has over 90 specialized research centers and institutes, which focus on such areas as marina resources, transportation, women's health, and managing pain, which are supported by WRF. WRF also has been a leading institution in technology transfer partnering with local business, several of which are described below. Amnis Corporation, a Seattle-based start-up founded in 1998, is developing high throughput laboratory automation tools that use a novel molecule detection technology. Theorus Corporation, based in Seattle, is commercializing therapeutic ultrasound products that provide effective, non-invasive surgical management of benign and malignant lesions, trauma conditions and selected functional disorders. The first application of its TheraSeal™ System is arterial puncture sealing. EKOS Corporation, a Bothell, Washington medical device company, is developing technologies that use

localized ultrasound to facilitate, enhance, or control the delivery or activation of drugs at a targeted tissue site. Micronics, Inc., based in Redmond, develops and commercializes innovative healthcare products using the unique capabilities of Micro Electro Mechanical Systems (MEMS) technology. Corus Pharma, Inc., based in Seattle, develops pharmaceutical products that address unmet needs in infectious disease and respiratory disorders. Point of CareWare, a Bellevue, Washington start-up, develops, markets, and supports products designed to improve the operations and quality of care provided by Post Acute Care facilities. Confirma, Inc., based in Kirkland, Washington, is a medical device company focused on developing and marketing magnetic resonance data analysis software and database products, which help physicians make more informed decisions. The company's lead product enables radiologists to interpret MRI images with greater precision and confidence for staging, therapeutic monitoring, and detection of recurrent solid tumor cancers. Koronis Pharmaceutical, Inc. was founded in 1998 to discover and develop antiviral small molecule drugs, with a particular focus on therapies for chronic viral diseases including those caused by the human immunodeficiency virus (HIV), hepatitis B virus (HBV), and hepatitis C virus (HCV). Lumera Corp. develops electro-photonic components based on proprietary polymer materials licensed from the University of Washington. nLight Photonics Corp., based in Seattle, is developing subsystems that will expand the capabilities and performance of optical networks. nLight's proprietary technology and manufacturing expertise will enable high-performance, cost effective networks. Intelligent Ion, based in Seattle, is developing a miniature mass spectrometer based on proprietary technologies developed at the University of Washington and California Institute of Technology/Jet Propulsion Laboratory. Intelligent Ion is focusing its products for applications in the chemical industry and environmental market. Ostex International, Inc., is

engaged in the discovery, development, and commercialization of diagnostics and therapeutics for diseases of the skeleton and connective tissues.

University Of Pennsylvania and its affiliate Center for Technology Transfer ("CTT") is at the forefront of efforts to move discoveries from the laboratory to the marketplace. CTT is involved in Internet and global telecommunication structures, new medical technologies, and pharmaceutical products and is currently working on discoveries that will shape the future in such exiting areas as: cognitive neuroscience; fuel cells; artificial vision; bioinformatics; nanotechnology; functional genomics; proteomics; medical imaging; MEMS; wireless technology; conductive polymers; genetic medicine; and natural language processing. Examples of technologies discovered at the University's laboratories that have been licensed for commercialization, either by a start-up venture or an established company include: neuronal cell transplants that treat stroke damage; plant cells engineered to be more efficient chemical factories; techniques that teach psychological resilience; micro-fluidics technology that move samples through multiple test sites for rapid analysis; synthesis technology using enzymes to produce a range of useful carbohydrates that have thousands of uses ranging from food additives to vaccines; computer-simulated human modeling providing manufacturers with a powerful new tool to optimize productivity; a technology to develop pharmaceutical approaches to managing disorders associated with myopia or nearsightedness; a technology that uses a combination of an adhesive with a patented fabric cuffs systems in horseshoes that distributes the weight of the horse over a broad area, reducing stress points; drugs that pre-condition heart cells for lower risk during cardiovascular procedures; non-invasive techniques that help heal fractures and bond fusions; a technology used to develop a vaccine to treat and prevent herpes simplex infections; and gene therapy that may hold the key to underlying diseases.

University Of Minnesota has been consistently recognized as a world-class institution of higher education and leader in the research community with pioneering faculty, research staff, and students who have made new discoveries and innovations in a wide array of disciplines including: agriculture; engineering; environmental and life sciences; and medicine. The University of Minnesota is also actively engaged in technology transfer affiliations. Net Perceptions™, a leading supplier of computer technology, received the first MIT Sloan E-Commerce Technology Innovator Award for innovations. Other significant efforts include a new aids drug based on anti-HIV components called carbovirs, discovered by Dr. Robert Vince at the University of Minnesota's College of Pharmacy. The University of Minnesota and the Mayo Foundation for Medical Education and Research also recently have licensed a technology for the diagnostic detection of tumors, particularly bre... cancer tumors utilizing the unique qualities of Vitamin B-12. In February 2000, the University of Minnesota-Duluth's Natural Research Institute helped form a partnership called NaturTek to glean valuable natural compounds from birch bark to be used in agrochemical, wood protection, coding materials, anti-corrosive and cleaning materials, lubricants and cutting materials, polymers, skin care products, nutraceuticals and pharmaceuticals.

The Board Of Trustees Of The Leland Stanford Junior University ("Stanford University"). The synthesis of teaching and research activities is fundamental to Stanford University. All faculty engage in scholarly research, most often in association with graduate students or advanced undergraduates. Stanford University is noted for its openness to interdisciplinary research, not only within the schools and departments, but also in its nine independent laboratories, centers and institutes. Stanford University is also known for

its pioneering efforts in structuring industry-university collaborations, and was recently awarded the Licensing Executive Society's inaugural Lifetime Achievement Award for those efforts. Several national research centers are located on the university's campus, including the Center for Advanced Study in the Behavioral Sciences, the National Bureau of Economic Research, and the Stanford Linear Accelerator Center (SLAC). There are more than 2,400 externally sponsored research projects throughout the university. Stanford University researchers have made many critical discoveries over the years, including: the synthesis of biologically active DNA in a test tube; the construction of a recombinant DNA molecule containing DNA from two different species; discoveries that led to magnetic resonance imaging; the invention of the klystron tube, a high frequency amplifier for generating microwaves; the construction of the first 6-million-volt accelerator for cancer treatment, making Hodgkin's disease and forms of cancer treatable; the invention of the laser; the first human heart transplant in the United States, followed by the first heart/lung transplant; the musical synthesizer widely used in electronic instruments; and the invention of the IQ test.

SUNY Research Foundation is a private, non-profit educational corporation responsible for the administration of externally-funded contracts and grants for and on behalf of the State University of New York. In 1999-2000, SUNY Research Foundation sponsored more than 7,500 programs to facilitate research, education, and public service at 30 state-operated locations. The State University of New York's research contributions are helping to solve some of today's most urgent problems. At the same time, contracts and grants received by university faculty directly benefit the economic development of the regions in which they are located. The State University of New York researchers pioneered nuclear magnetic resonance imaging and the supermarket bar code scanner, introduced time-lapse photography of forestry

subjects, isolated the bacteria that causes Lyme disease, and developed the first implantable heart pacemaker. Other researchers continue important studies in such wide-ranging areas as breast cancer, immunology, marine biology, sickle-cell anemia, robotics, and make hundreds of other contributions, inventions and innovations for the benefit of society.

Cornell Research Foundation, Inc. ("CFR") is a non-profit subsidiary of Cornell University responsible for the evaluation, protection, and commercialization of innovations resulting from its research programs. CRF has issued over 800 active licenses to more than 250 companies and has helped create a number of start-up companies. The products of these enterprises include: flat-screen TV's; Web-based video editing techniques; methods for improving agricultural crops; novel ways of producing Internet switching devices; a fortified powdered orange drink to improve children's growth and mental development; biodegradable hydro-gels that deliver medications inside the body; and anchor skin and vascular grafts; a new light weight polymer material reinforced with glass or carbon fibers stronger than steel; self-guided robots that can "think" -- and play championship soccer; behavioral economics techniques that analyze how and why people mismanage money; a method of eliminating deadly E-coli 0157:H7 bacteria from meat; and ways by which on-shore pollution causes disease in the ocean.

University Of Florida established the non-profit University of Florida Research Foundation, Inc. in 1986 to promote, encourage, and provide assistance to the research activities of university faculty, staff, and students. Its mission is to provide the means by which research can be conducted flexibly and efficiently and discoveries, inventions, processes, and work products can be transferred from laboratory to the public. The funds generated by licensing such technologies are used to enhance research at the

University of Florida, which has more than 100 service and education centers, bureaus, and institutes. More than two dozen faculty are members of the National Academies of Science and/or Engineering, the Institute of Medicine, or a counterpart in another nation. Among its most prominent research affiliates are the University of Florida's Brain Institute, Health Science Center, National High Magnetic Field Laboratory, and Whitney Marine Laboratory.

University of Utah ranks among the top 25 public research universities in the United States. In addition to internally supported research, the University receives more than $242 million dollars from federal, state, and private sources in direct support of specific research projects. The University conducts and supports research at over 40 internal centers and institutes, such as the Huntsman Cancer Institute, the Center for Human Genome Research, the Institute for High Energy Astrophysics and the Tanner Center for Humanities. In 1967 the University of Utah Technology Transfer Office ("TTO") was established under the Vice President for Research to manage the University's intellectual property and to help faculty and staff realize the economic value of their inventions. The TTO patents inventions developed at the University and seeks appropriate licensees in order that the benefit of these technologies be made available to the general public. The University of Utah owns approximately 291 active patents, and has approximately 146 active licenses. More than 60 companies have been established based on University of Utah technologies licensed by the Technology Transfer Office which has led to local and national economic benefits by creating over 3,600 jobs and generated more than $176 million in investment.

Oregon Health & Science University ("OSHU"). OHSU's fundamental purpose is to improve human health. It accomplishes this mission by: educating physicians, dentists, nurses, biomedical scientists and allied health professionals;

conducting basic and applied research on the prevention, treatment and cure of diseases and injuries; providing comprehensive, innovative and cutting-edge patient care; and improving access to care and education through its public service and outreach activities. In the past decade, some of the nation's most accomplished scientists have flocked to OHSU. Accordingly, OHSU has a well-earned reputation as a premier biomedical research institution and now maintains multimillion dollar, multiyear training and research grants in such areas as neurodegenerative disease (*e.g.*, Alzheimer's and Parkinson's), addictive disorders, stress, cancer, heart disease, genetic disorders, stroke, sleep disorders, neurosciences, toxicology, physiology and pharmacology, eye disorders, hearing loss, hypertension and clinical nutrition. OHSU scientists announce breakthroughs and innovations about every seven days. Approximately 1,500 scientists are working on basic and applied research projects at present.

University Of Texas-Medical Branch ("UTMB") was established in 1891 and today is an international leader in bio-medical research with a broad range of promising applications for patient care. Research at UTMB is multi-disciplinary, including basic scientists, clinicians, faculty, and students from all areas of medicine working together to share information, facilities, and other resources that focus on research, which addresses cancer, environmental toxicology, structural biology, molecular sciences, aging, and molecular cardiology. Current research activities include investigation of new and resurgent infections, tropical diseases, neuroscience, burns and wound healing. UTMB is also home to the National Student Research Forum, which plays a pivotal role in support and education of the nati 's scientific leaders.

University Of Vermont ("UVM") is the state's only comprehensive research university. It is a national leader in

identifying effective practices for educating children with disabilities and the university's research has helped stop smoking, promote effective breast cancer screening, and prevent of aids and diabetes. Environmental research has been critical in lake and river quality, tracking fish senses, and fish breeding habits and health. UVM has been active in the transfer of technologies to Vermont business, which has created jobs and support innovation. For example, it has provided technical support to a Vermont company in x-ray lithography and the university is linked with a business that is experimenting in polymer to address a semiconductor adhesion problem. UVM research also has developed optical switches for communication systems. UVM plays a central role in the Vermont Technology Council, which has helped create links with business, academia, and state government to benefit Vermont's economy.

University Of Texas M.D.-Anderson Cancer Center-Houston is one of the leading cancer treatment and research facilities in the world and one of the three comprehensive cancer centers designated by the National Cancer Act of 1971. Research has been the driving force that has propelled the University of Texas M.D. Anderson Cancer Center's international reputation for scientific excellence. M.D. Anderson's scientists are in the vanguard of understanding the meaning of the inherited flaws in various genes responsible for cancer. The most recent findings for clinical interventions focus on genes involved in cancer initiation and proliferation. Of the estimated 100,000 genes within every person, only 400 appear to be critical for cell division and growth. Identifying the molecular mutations or malfunctions in those key genes is now possible. A cancer genomics laboratory at M.D. Anderson supports research to expand molecular therapies. One fruitful area of gene-based translational research concerns the p53 tumor suppressor gene, which is either missing or mutated in a majority of human cancers. Landmark research reported from M. D.

Anderson during the 1990s included the first successful correction of a defective p53 gene in lung cancer patients and extension of that gene therapy method to treat head and neck, prostate, bladder and other cancers. Progressively positive results have been observed in expanding clinical trials that combine p53 gene therapy with chemotherapy and radiation. Other techniques to replace or repair abnormal genes also have been developed at M. D. Anderson for brain tumors as well as breast and ovarian cancers. Several types of gene therapies have progressed from laboratory studies in experimental animals to clinical trials in only a few years because of the collaboration among research and clinical faculty and the institution's capacity to care for a large number of patients, including those with uncommon cancers.

Cold Spring Harbor (Woods Hole Oceanographic Center). Cold Spring Harbor Laboratory scientists also work with researchers at other laboratories and universities, and collaborate with their counterparts in the biotech and pharmeceutical industries in a quest to translate advances in basic research into applications that are life-saving and life-enriching. Current areas of research are: cancer research; neurobiology; genetics & bioinformatics; and plant genetics. Another major effort is to understand molecular aspects of plant developmental genetics and genomics. The plant group at CSH is expanding upon the Nobel prize-winning work done by Barbara McClintock in the 1940s, 50s and 60s; the transposable genetic elements, or "jumping genes," that she discovered are the basis for much of plant genetics research today. One of the most exciting and complex projects in this area is the study of the molecular biology of learning and memory. Cold Spring Harbor scientists are making strides in understanding the physiological basis of learning and the formation of long term memories. Cold Spring Harbor Laboratory is also involved in genome research and recently entered into a global collaboration to map and sequence the entire genome of a flowering plant for the first time ever.

The American Council On Education ("ACE"), founded in 1918, is the nation's coordinating higher education association. ACE is dedicated to the belief that equal educational opportunity and a strong higher education system are essential cornerstones of a democratic society. ACE's 1,800 members include accredited, degree-granting colleges and universities from all sectors of higher education and other education and education-related organizations. ACE is a forum for the discussion of major issues related to higher education and its potential to contribute to the quality of American life. The American Council on Education represents regularly before the United States Supreme Court, other federal courts, Congress, and federal agencies.

The Association Of American Universities was founded in 1990 by a group of 14 universities offering the Ph.D. degree. Today, the Association has 61 American universities as members, approximately half of which are public institutions and half are private. The Association assists members in developing national policy positions on issues that relate to academic research and graduate and professional education. In matters of national science and research policy, the Association is actively involved with a broad cross-section of organizations, including the National Academies of Science and Engineering and the Institute of Medicine.

The National Association Of State Universities And Land-Grant Colleges was founded in 1887 and is the nation's oldest higher education institution, including public universities, land-grant institutions, and many of the nation's public university systems. As of October 2000, Association membership included 212 institutions, including 75 land-grant universities (of which 17 historically were designated as black public institutions under Second Morrill Act of 1890) and 28 public higher education systems. Tribal colleges became land-grant institutions in 1994 and 30 are

represented by the Association through the membership of the American Indian Higher Education Consortium.

Council On Governmental Relations ("COGR") is an association of 144 research-intensive universities in the United States. It is a source of critical information on current and emerging issues for its members and agencies sponsoring their research activities. COGR is a leading advocate for policies that support the conduct of research at the highest standards and sound and informed decision-making on issues affecting the research and education community. COGR works with federal agencies and research sponsors to develop a common understanding of the impact that policies, regulations and practices may have on the research and training programs conducted by the membership.

Research Corporation Technologies is an independent technology management company that provides commercialization services to academia and industry and has been pivotal in the success of many important pharmaceuticals, diagnostics, biotechnology products, new materials and processes.

AUG 31 2001

(36)

No. 00-1543

Supreme Court, U.S.
FILED
AUG 31 2001
CLERK

IN THE

Supreme Court of the United States

FESTO CORPORATION,

Petitioner,

v.

SHOKETSU KINZOKU KOGYO KABUSHIKI CO., LTD., a/k/a SMO CORP. and SMC PNEUMATICS, INC.,

Respondents.

On Writ of Certiorari to the United States Court of Appeals for the Federal Circuit

---

BRIEF OF THE HOUSTON INTELLECTUAL PROPERTY LAW ASSOCIATION AS *AMICUS CURIAE* IN SUPPORT OF PETITIONER

SHARON A. ISRAEL, PRESIDENT *
HOUSTON INTELLECTUAL PROPERTY LAW ASSOCIATION
L. GENE SPEARS
TIM L. BURGESS
1100 Louisiana Street, Ste. 1800
Houston, Texas 77002
(713) 286-2035

* Counsel of Record

Counsel for Amicus Curiae

WILSON-EPES PRINTING CO., INC. – (202) 789-0096 – WASHINGTON, D. C. 20001

27 pp

QUESTIONS PRESENTED

The amicus curiae will address the following questions:

1. Whether every claim-narrowing amendment designed to comply with any provision of the Patent Act—including those provisions not related to prior art—automatically creates prosecution history estoppel regardless of the reason for the amendment.
2. Whether a finding of prosecution history estoppel completely bars application of the doctrine of equivalents.

TABLE OF CONTENTS

	Page
TABLE OF AUTHORITIES	iv
INTERESTS OF THE AMICUS CURIAE	1
BACKGROUND	2
A. The Contents of a Patent Application	2
B. The Perils of Claim Drafting and the Doctrine of Equivalents	4
C. The PTO's Action On An Application	6
D. The Accident Of Prosecution History: An Example	8
E. Amendments And The Warner-Jenkinson Presumption	10
F. Prospective Consequences and Avoidance Behavior	12
ARGUMENT	14
A. The Federal Circuit Has Applied Prosecution History Estoppel Flexibly	15
B. This Court Has Not Countenanced an Inflexible Bar	15
C. Festo Has Unfairly (And Improperly) Changed the Rules of the Game	16
D. The Federal Circuit's "Intrinsic Evidence" Rule Is Inconsistent With Warner-Jenkinson	21
CONCLUSION	22

TABLE OF AUTHORITIES

CASES	Page
Dickinson v. Zurko, 527 U.S. 150 (1999)	16
Diversitech Corp. v. Century Steps, Inc., 850 F.2d 675 (Fed. Cir. 1988)	10
FMC Corp. v. Hennessy Industries, Inc., 836 F.2d 521 (Fed. Cir. 1987)	3
Festo Corp. v. Shoketsu Kinzoku Kogyo Kabushiki, 234 F.3d 558 (Fed. Cir. 2000)	*passim*
Graver Tank & Mfg. Co. v. Linde Air Products Co. 339 U.S. 605 (1950)	5, 20
Hilton Davis Chemical Co. v. Warner-Jenkinson Co. Inc., 62 F.3d 1512 (Fed. Cir. 1995)	*passim*
Hughes Aircraft Co. v. United States, 717 F.2d 1351 (Fed. Cir. 1983)	15
Lockwood v. American Airlines, Inc., 107 F.3d 1565 (Fed. Cir. 1997)	3
Markman v. Westview Instruments, Inc., 517 U.S. 370 (1996)	3
Oddzon Products v. Just Toys, Inc., 122 F.3d 1396 (Fed. Cir. 1997)	3
Royal Typewriter Co. v. Remington Rand, Inc., 168 F.2d 691 (2nd Cir. 1948)	4, 6
Wilson Sporting Goods Co. v. David Geoffrey & Associates, 904 F.2d 677 (Fed. Cir. 1990)	10
Texas Instruments, Inc. v. U.S. International Trade Commission, 988 F.2d 1165 (Fed. Cir. 1993)	10
Vas-Cath, Inc. v. Mahurkar, 935 F.2d 1555 (Fed. Cir 1991)	13
Warner-Jenkinson Co. Inc. v. Hilton Davis Chemical Co, 520 U.S. 17 (1997)	*passim*

TABLE OF AUTHORITIES—Continued

STATUTES AND RULES	Page
35 U.S.C. § 102	6, 15
35 U.S.C. § 103	6, 15
35 U.S.C. § 111(a)	2
35 U.S.C. § 112	*passim*
35 U.S.C. § 113	2
35 U.S.C. § 119	11
35 U.S.C. § 133	7
35 U.S.C. § 134(a)	7
35 U.S.C. § 141	7
35 U.S.C. § 145	7
35 U.S.C. § 154(b)(1)(C)	14
35 U.S.C. § 302	18
37 C.F.R. § 1.104(a)	6
37 C.F.R. § 1.111(a)	7
37 C.F.R. § 1.113(a)	7
37 C.F.R. § 1.114(a)	7
37 C.F.R. § 1.116	3, 11
37 C.F.R. § 1.56	3
37 C.F.R. § 1.75(c)	8
37 C.F.R. § 1.97-98	3
Fed. R. Civ. P. 1	21
Fed. R. Evid. 102	22

INTERESTS OF THE *AMICUS CURIAE*

The Houston Intellectual Property Law Association (HIPLA) is an association of over 400 lawyers and other professionals who work in the Houston, Texas area.[1] The practice of most of the HIPLA membership relates in substantial part to the field of intellectual property law. Founded in 1961, HIPLA is one of the largest regional associations of intellectual property practitioners. No HIPLA member has served as record counsel to any party in the subject of this appeal.

HIPLA believes that two of the rules announced by the Federal Circuit in this case will work an arbitrary restriction of property rights held by a significant number of patentees, and will burden prospectively the orderly and efficient operation of the patent system. The first of these is the Federal Circuit's holding "that when a claim amendment creates prosecution history estoppel, no range of equivalents is available for the amended claim element." *Festo Corp. v. Shoketsu Kinzoku Kogyo Kabushiki*, 234 F.3d 558, 564 (Fed. Cir. 2000) (*en banc*). The second is the restriction of evidence a patent holder may use to rebut the presumption that unexplained claim amendments are related to patentability to the intrinsic evidence of the prosecution record. *Festo*, 234 F.3d at 586. The "inflexible bar" rule is the subject of the second question presented by Festo's petition. The "intrinsic evidence" rule is within the scope of the first. This amicus curiae respectfully requests that this Court reverse the Federal Circuit's holdings on both points.

---

[1] No counsel for a party authored this brief in whole or in part, and no person or entity other than *amicus curiae*, its members or counsel, has made a monetary contribution to the preparation or submission of this brief. This brief is submitted with both parties' consent.

BACKGROUND

Judge Michel proposed in his partial dissent "that the majority's rule will reduce the effective scope, and thus, the value, of most of the 1,200,000 patents that are unexpired and enforceable." *Festo*, 234 F.3d 558. That critique was not challenged by the *Festo* majority, presumably because it is true. Moreover, this reduction in the scope and value of patent rights will be worked through rules which, while satisfying the majority's desires for certainty, are unfair and arbitrary as applied to the past behavior of patent applicants and their attorneys. To fully assess the consequences of the Federal Circuit's "inflexible bar" and "intrinsic evidence" rules, it is necessary to frame those rules in the context of the process by which patents are applied for and issued.

A. *The Contents of a Patent Application*

The patenting process begins with the submission of an application and fee to the United States Patent and Trademark Office (PTO). 35 U.S.C. § 111(a). The "application" includes a specification (as prescribed by 35 U.S.C. § 112), drawings (as prescribed by 35 U.S.C. § 113), and an oath (as prescribed by 35 U.S.C. § 115). 35 U.S.C. § 111(a)(2). The specification includes a "written description of the invention, and of the manner and process of making and using it, in such full, clear, concise and exact terms as to enable any person skilled in the art . . . to make and use the same." 35 U.S.C. § 112. In addition, the specification "shall conclude with one or more claims particularly pointing out and distinctly claiming the subject matter which the applicant regards as his invention." *Id.* The content of the specification, as amended by the applicant and/or the PTO examiner, is ultimately reformatted and printed in the patent itself.

A specification may (and typically does) describe multiple patentable devices or methods. The claims identify which of these devices or methods are the subject of the patent grant.

For example, a patent applicant disclosing a device having patentable features A, B, and C, may submit claims to A (or B or C) alone, or to any of the combinations AB, AC, BC, and ABC. However, the specification must contain an explicit written description of anything that the applicant submits in a claim. *Lockwood v. American Airlines, Inc.*, 107 F.3d 1565, 1571–72 (Fed. Cir. 1997). There is no limit to the number of claims an applicant may submit—although the filing fee increases for claims above a certain number. 37 C.F.R. § 1.116. Once issued, the claims become the measure of the patent, both for the purpose of assessing its validity and for deciding if it is infringed. *Markman v. Westview Instruments, Inc.*, 517 U.S. 370, 373 (1996).

In addition to the application and oath, the applicant may submit an "information disclosure statement" that identifies prior art that is potentially relevant to the invention. 37 C.F.R. §§ 1.97-98. "Prior art" includes the printed publications, and instances of prior invention, sale, or use that are identified by the novelty provisions of 35 U.S.C. § 102. *See Oddzon Products v. Just Toys, Inc.*, 122 F.3d 1396, 1401-02 (Fed. Cir. 1997). There is no requirement in the patent law that an applicant conduct any sort of search for prior art. *See FMC Corp. v. Hennessy Industries, Inc.*, 836 F.2d 521, 526 (Fed. Cir. 1987). However, the PTO imposes a duty on patent applicants (and their attorneys) to disclose prior art (of which they are aware) that is "material to patentability." 37 C.F.R. § 1.56.

At least before the *en banc* decision in *Festo*, a common practice among patent attorneys has been to submit claims of varying scope—ranging from the most expansive breadth that may be allowed over the prior art known to the applicant, to a narrowly-tailored fit to a specific embodiment (such as a commercial product). This practice is efficient in two respects. It allows for examination of all patentable aspects of an invention in a single proceeding (rather than through

multiple applications). And it places the burden of searching (or knowing) the prior art on a single, skilled PTO examiner, rather than on multiple applicants with cases pending before that examiner. The applicant's imperfect knowledge of the art can be remedied by amendment without surrendering the scope to which he/she was otherwise entitled—that is, before *Festo* was decided.

B. *The Perils of Claim Drafting and the Doctrine of Equivalents*

The drafting of patent claims is an inherently imprecise exercise. Judge Learned Hand in *Royal Typewriter Co. v. Remington Rand, Inc.*, 168 F.2d 691 (2nd Cir. 1948), described the quandary of the applicant in drawing claims.

> It is true that a boundary cannot be drawn with precision; and the draftsman of claims is always in something of a dilemma—the dilemma which has led to the very "doctrine of equivalents" itself. He must first pick out those elements of the [subject matter] which together make up the invention, for so the statute requires: 'he shall particularly point out and distinctly claim the part, improvement, or combination which he claims as his invention or discovery.' On the other hand, if he confines himself rigidly to the elements as they appear in the specification, he deprives the patent of any practical value, because it is always, or almost always, possible to change the form of these as they appear, and yet cull the full advantage of the discovery. On the other hand, if he too much abandons the elements as they are disclosed, he will not 'particularly point out . . . the part . . . or combination which he claims': i.e., he will have so far generalized the disclosure, that the combination of any elements which will effect the same result will be covered. The patent will then pro tanto stifle progress in the art and be invalid. It is impossible to emerge from this embarrassment without some element of compromise; the elements as they appear in the claims must be clearly enough identified with elements in the [subject matter] to be 'substantially' limited by their description, verbal and pictorial. Yet, the claims must be given enough scope to cover 'substantially similar' variants. It is always a question of degree, and courts have differed, and will always differ, as to the allowable latitude in a given instance.

168 F.2d at 1092.

This difficulty in drafting claims is all the more challenging for the reasons stated by Judge Newman, concurring, in *Hilton Davis Chemical Co. v. Warner-Jenkinson Co. Inc.*, 62 F.3d 1512, 1536 (Fed. Cir. 1995), *reversed and remanded*, *Warner-Jenkinson Co. Inc. v. Hilton Davis Chemical Co*, 520 U.S. 17 (1997):

> The patent law places strong pressure on filing the patent application early in the development of the technology, often before the commercial embodiment is developed or all of the boundaries fully explored. Since the patentee is barred from enlarging the claims after two years from the date of issuance, later developments are excluded from the patent system unless they independently meet the criteria of patentability. . . . Most legal documents can be reformed, or amended, or supplemented. However, the available mechanisms for patent documents are extremely limited, for neither the reissue nor reexamination procedure permits adding to the disclosure. Thus some technologic variants can be reached only through litigation invoking the doctrine of equivalents.

As Judge Newman recognized, the inherent imprecision in a patent applicant's ability to define his exclusive right with absolute precision is remedied somewhat through the doctrine of equivalents. Judge Hand, whose *Royal Typewriter* decision was cited approvingly by this Court in *Graver Tank & Mfg. Co. v. Linde Air Products Co.*, 339 U.S. 605 (1950), explained as well as anyone how this happens:

Coming then to the question of infringement, we are first to interpret the claims in the light of the disclosure; and both the claims and the disclosure in the setting of the prior art. In these respects, a patent is like any other legal instrument; but is peculiar in this, that after all aids to interpretation have been exhausted, and the scope of the claims has been enlarged as far as the words can be stretched, on proper occasions, courts make them cover more than their meaning will bear. If they applied the law with inexorable rigidity, they would never do this, but would remit the patentee to his remedy of re-issue, and that is what they frequently do. Not always, however, for at times they resort to the "doctrine of equivalents" to temper unsparing logic and prevent an infringer from stealing the benefits of an invention. No doubt, this is, strictly speaking, an anomaly; but it is one which the courts have frankly faced and accepted from almost the beginning. All patents are entitled to its benefit to an extent, measured on the one hand by their contribution to the art, and on the other by the degree to which it is necessary to depart from the meaning to reach a just result.

168 F.2d at 692 (citations omitted).

C. *The PTO's Action On An Application*

When the PTO receives a patent application, it directs that application to an "art unit" responsible for examination in the technical field of the applicant's invention. The examiner to which the application is assigned is obliged to "make a thorough study thereof and shall make a thorough investigation of the prior art relating to the subject matter of the claimed invention." 37 C.F.R. § 1.104(a). If the examiner determines that the invention is not patentable, then "the claims, or those considered unpatentable will be rejected." 37 C.F.R. § 1.104(c)(1). When rejecting claims for want of novelty (*see* 35 U.S.C. § 102) or for obviousness (*see* 35 U.S.C. § 103), the examiner "must cite the best references at his or her command." 37 C.F.R. § 1.104(c)(2). If the

pertinence of a reference is not apparent, then it "must be clearly explained, and each rejected claim specified." *Id.* The examiner is under no duty to reject claims, and it is not unusual for claims to be allowed without any further action by the applicant.

If the action of the PTO examiner is adverse to the applicant in any respect, then the applicant has a right to reply. 37 C.F.R. § 1.111(a). That reply may request reconsideration or further examination, with or without amendment. *Id.* It "must be reduced to a writing which distinctly and specifically points out the supposed errors in the examiner's action and must reply to every ground of objection and rejection in the prior Office action." 37 C.F.R. § 1.111(b). If the applicant amends his/her claims, then he/she must "clearly point out the patentable novelty which he [] thinks the claims present in view of the state of the art" and "show how the amendments avoid such references or objections." 37 C.F.R. § 1.111(c). Although the applicant is under no duty to reply, the application will be held abandoned if no reply is received within a certain period of time. 35 U.S.C. § 133.

If the applicant's arguments are unpersuasive, the examiner may, "on the second or any subsequent examination or consideration," make his rejections final. 37 C.F.R. § 1.113(a). At this point, there are several options available to the applicant. If there are allowable claims, then he/she may cancel the rejected claims and receive a patent claiming only the allowed subject matter. He/She may request continued examination by filing the appropriate submissions and fee. 37 C.F.R. § 1.114(a). He/She may appeal the rejection to the Board of Patent Appeals and Interferences, 35 U.S.C. § 134(a), whose decisions in turn may be appealed to the United States Court of Appeals for the Federal Circuit (35 U.S.C. § 141) or challenged by civil action in the United States District Court for the District of Columbia (35 U.S.C. § 145).

At times, claims are rejected not based on prior art or unsupported breadth, but for technical drafting or non-substantive reasons correctable by amendment. For example, a claim that is "dependent" may, by reference to another claim, incorporate limitations from that claim. *See* 35 U.S.C. § 112. A dependent claim must hang directly (or indirectly through reference to another dependent claim) from an independent claim (*i.e.*, one that does not incorporate limitations by reference from another claim). *See* 37 C.F.R. § 1.75(c). The limitations of the independent claim may not suffice to distinguish that claim patentably from the prior art, but the additional limitations of a dependent claim may. In such a case, the examiner may object to the dependent claim not because it fails to distinguish over the art, but because it is not in a form needed for allowance (*i.e.*, it must be rewritten in independent form). There are any number of non-substantive informalities that may be identified and corrected. Amendment is the process of refining the claims so that they distinguish over the prior art, are not broader than the specification will support, and are rid of these informalities.

D. *The Accident Of Prosecution History: An Example*

The sum of all of this activity comprises the "prosecution history" of the patent. That history is contained in a written record that the PTO maintains for each patent application that it processes. Through his/her initial claim selection—and through the subsequent process of amendment, cancellation, or argument—the applicant may eventually arrive at claims that are deemed allowable by the PTO examiner. For the same invention, there are multiple paths to the same patent. The Federal Circuit's "inflexible bar" rule poses dire consequences to applicants whose path included claim amendment—a choice which, before *Festo*, was little more than an accident of history.

The arbitrary impact of the Federal Circuit's "inflexible bar" may be illustrated through an example based on the

patent addressed in *Warner-Jenkinson Co. v. Hilton Davis Chemical*, 520 U.S. 17 (1997). That patent claimed a process for purifying dye which involved subjecting an aqueous solution to ultrafiltration through a membrane having a specified pore size, at a specific hydrostatic pressure range, and "at a pH from approximately 6.0 to 9.0". *Warner-Jenkinson*, 520 U.S. at 22. During prosecution, the PTO examiner cited prior art (the Booth patent) teaching an ultrafiltration process operated at above a pH of 9.0. A patent having the literal scope of the Hilton Davis patent might have been arrived at through any of the following routes:

1. Hilton Davis presents original claims limited to processes operated "at a pH from approximately 6.0 to 9.0," which are allowed without rejection;
2. Hilton Davis presents original claims limited to processes operated "at a pH from approximately 6.0 to 9.0," the claims are rejected based on the Booth patent, and Hilton Davis argues (successfully) for patentability in its reply;
3. Hilton Davis presents original claims that contain and original claims that lack the pH limitation, the examiner rejects only the claims that lack the pH limitation, Hilton Davis cancels the rejected claims;
4. Hilton Davis presents original claims that contain and original claims that lack the pH limitation; the examiner rejects all the claims, Hilton Davis argues (successfully) for the pH-limited claims, then cancels the claims that lack this limitation;
5. Hilton Davis presents original claims that lack any pH limitation, the examiner rejects those claims; Hilton Davis amends its claims to a process operated "at a pH from approximately 6.0 to 9.0" (*i.e.*, the actual facts of *Warner-Jenkinson*).

In each case, the claims of the issued patent are literally identical. But the scope of equivalence afforded each

"patent" would differ dramatically based upon its prosecution history. In case 1, there would be no prosecution history estoppel, and Hilton Davis would be entitled to whatever range of equivalents is allowed by the prior art, *see Wilson Sporting Goods Co. v. David Geoffrey & Associates*, 904 F.2d 677, 684 (Fed. Cir. 1990), and by the legal standard of equivalence. *See Warner-Jenkinson*, 520 U.S. at 39-40. In cases 2 and 4, Hilton Davis's arguments for patentability would create a prosecution history estoppel under Federal Circuit law. *See Texas Instruments, Inc. v. U.S. International Trade Commission*, 988 F.2d 1165, 1174 (Fed. Cir. 1993). In case 3, cancellation of the broader claim would also work an estoppel under Federal Circuit law. *See Diversitech Corp. v. Century Steps, Inc.*, 850 F.2d 675 (Fed. Cir. 1988). But because the claims were not amended, the estoppel in cases 2-4 would presumably be analyzed under the "flexible bar" that the Federal Circuit has applied in dozens of decisions published since 1983. *See Festo*, 234 F.3d at 613-15. In case 5, Hilton Davis would, under the "inflexible bar" of *Festo*, be entitled to no range of equivalents. That is a severe consequence – and one that would not have been predicted by the hypothetical attorney who drafted and prosecuted the application in case 5. That is why the "inflexible bar" of *Festo* is fundamentally unfair when applied to the 1,200,000 patents that are still within their statutory term.

E. *Amendments And The Warner-Jenkinson Presumption*

The *Festo* decision is directed to the consequences of claim amendment on subsequent efforts to enforce the patent through the doctrine of equivalents. One problem identified by this Court was that posed by an amendment that is offered without explanation. In such cases, this Court "place[d] the burden on the patent holder to establish the reason for an amendment required during patent prosecution." *Warner-Jenkinson*, 520 U.S. at 33. This Court set up a presumption

that in those cases "the patent applicant had a substantial reason related to patentability for including the limiting element added by amendment." *Id.* But that presumption was "subject to rebuttal if an appropriate reason for a required amendment is established." *Id.* In *Festo*, the Federal Circuit limited the evidence that may be used to rebut that presumption to the contents of the prosecution record. *Festo*, 234 F.3d at 586.

The application of this "intrinsic evidence" rule to the 1,200,000 patents in force will have consequences that are every bit as arbitrary and unfair as those that will result from the "inflexible bar." Other than a PTO regulation urging applicants to explain how an amendment offered to overcome prior art defines patentable subject matter (37 C.F.R. § 1.111), there is no requirement that a patent applicant explain his amendments. A patent applicant may amend his claims by right at any time preceding a final rejection, and by permission afterward. 37 C.F.R. § 1.116. Claims may be amended for a variety of reasons, and those reasons may (or may not be) identified depending upon the practice of the attorney who amended them. These reasons may vary from a change in the responsible attorney, to a change in the design or formulation of a commercial product to be protected by the patent, to a change in the law defining patentable subject matter or infringement, to the discovery of a prior art reference or information learned in an investigation of inventorship, *et cetera*. In none of those cases would the attorney be obligated to state his reasons for amendment. And if he did not, then the only evidence that the patent holder could use to rebut the *Warner-Jenkinson* presumption would be extrinsic, and thus excluded from consideration under *Festo*.

The Federal Circuit's "intrinsic evidence" rule is especially pernicious when applied to patent applications originated in foreign countries and filed in this one under 35 U.S.C. § 119 (as was the Stoll patent asserted by Festo). Domestic

attorneys representing foreign clients frequently face tight deadlines in filing these applications. It is common in these cases for the attorney to file a "preliminary amendment" subsequent to a timely filing of an application that met the statutory deadline. That practice is recognized and encouraged by the PTO's Manual of Patent Examination Procedure (MPEP).[2] The purpose of that "preliminary amendment" is typically to conform the claims to United States law and practice, and to the tastes of the domestic attorney. That explanation may be stated in the prosecution record, or it may not be—since there was absolutely no requirement that the attorney do so. Notwithstanding that amendments in these cases are easily explained through extrinsic evidence, *Festo* would bar patentees from offering that explanation. Under the Federal Circuit's "intrinsic evidence" rule, the patentee's access to the doctrine of equivalents is based solely upon an accident of attorney practice that was of no consequence at the time of amendment.

F. *Prospective Consequences and Avoidance Behavior*

The harsh consequences of the *Festo* "intrinsic evidence" rule are avoidable prospectively. Attorneys who have not previously explained certain amendments will begin to do so. The same cannot be said of the *Festo* "inflexible bar." A

[2] MPEP §702.01 expressly recommends amendments in the following situation: "It is obviously to applicant's advantage to file the application with an adequate disclosure and with claims which conform to the U.S. Patent and Trademark Office usage and requirements. This should be done whenever possible. If, however, due to the pressure of a Convention deadline or other reasons, this is not possible, applicants are urged to submit promptly, preferably within 3 months after filing, a preliminary amendment which corrects the obvious informalities. The informalities should be corrected to the extent that the disclosure is readily understood and the claims to be initially examined are in proper form, particularly as to dependency, and otherwise clearly define the invention. 'New matter' must be excluded from these amendments since preliminary amendments do not enjoy original disclosure status." MPEP §608.04(b).

member of the *Festo* majority theorized in a concurring opinion that a patent attorney cannot have any expectations at the application stage regarding the doctrine of equivalents because he "is ill-advised to settle for a narrower claim than he considers justified on the assumption that he can rely on the doctrine of equivalents for broader coverage." *Festo*, 234 F.3d at 596-97. This amicus curiae respectfully disagrees. The literal scope that an applicant may claim through amendment is limited by the written description contained in the original specification. Although the applicant may amend the written description to support amended claim language, he/she will lose the original priority date by doing so. *See Vas-Cath, Inc. v. Mahurkar*, 935 F.2d 1555, 1561-63 (Fed. Cir. 1991). This may create invalidating prior art or bars to patentability out of publications or uses of the invention that would not otherwise qualify.

Returning to the *Warner-Jenkinson* hypothetical, there was presumably support in Hilton Davis's original specification for a process operated "at a pH from approximately 6.0 to 9.0." That support would be in the form of an explicit statement that identifies this pH range. Assuming that a process operated "at a pH from approximately 2.0 to 9.0" would have been patentable to Hilton Davis, the applicant could have obtained that scope of patent protection:

1. by including the range of "2.0 to 9.0" in its claim amendment—which it could have done *only* if its original specification explicitly identified that range;
2. (if it did not) by amending both the written description and claims, thereby losing the original priority date and raising potential invalidating prior art or bars; or
3. through the doctrine of equivalents.

After *Festo*, only the first option may be viable. This suggests the first type of inefficient avoidance behavior that the "inflexible bar" rule will encourage—the submission of

lengthy (and more time-consuming to examine) specifications that contain support for every possible literal claim scope the applicant might want to add subsequently by amendment.

But the more burdensome avoidance behavior, both for the patent system and for the public, will be a proliferation of appeals. Returning to the *Warner-Jenkinson* example, assume that (at the time of rejection) Hilton Davis: (1) could support a claim amendment only to processes operated at a pH of 6.0-9.0; (2) could not amend its written description to identify a broader range without creating invalidating prior art; and (3) knew that a process operated at a pH of 5.0 was perfectly viable. Before *Festo*, Hilton Davis would likely have made the "6.0 to 9.0" amendment and relied upon the doctrine of equivalents.

After *Festo*, Hilton Davis would appeal the rejection. The appeal process is neither efficient nor swift,[3] and will grow even less so as the caseload of the Board of Patent Appeals and Interferences swells in response to *Festo*. The years that pass in an appeal are years of term denied the patentee on the front end—when patent protection is most needed. Under recent revisions of the patent statute (*see* 35 U.S.C. § 154(b)(1)(C)), that term is added on the back end—at a time when mature technologies should be passing into the public domain.

ARGUMENT

If in the course of prosecution, claims are amended (as is commonplace), it is possible that substantive ground was surrendered to get the claims allowed. A court-made doctrine with its roots in the common law, the doctrine of prosecution history estoppel acts as a check on the reach of the doctrine of equivalents, to prevent recapture of surrendered ground,

[3] This amicus is unaware of a formal publication of time-to-decision statistics of the Board of Patent Appeals and Interferences. It appears that time is about 2-3 years.

whether it was surrendered to meet a condition of patentability under 35 U.S.C. §102 or 103, or to comply with one of the requirements of 35 U.S.C. §112 (*e.g*, a reduction of claim scope to what is supported by the specification).

A. *The Federal Circuit Has Applied Prosecution History Estoppel Flexibly*

Historically, the doctrine of prosecution history estoppel has not prevented the doctrine of equivalents from extending the patentee's exclusive right to equivalents in the space between the literal boundaries of the *amended* claim and what was surrendered. As stated in the Federal Circuit's lead case, *Hughes Aircraft Co. v. United States*, 717 F.2d 1351, 1363 (Fed. Cir. 1983):

> Amendment of claims is a common practice in prosecution of patent applications. No reason or warrant exists for limiting application of the doctrine of equivalents to those comparatively few claims allowed exactly as originally filed and never amended.

In dozens of subsequent cases, the Federal Circuit applied a flexible bar, in which amended claims are allowed access to the doctrine of equivalents. These cases were reviewed at length in Judge Michel's concurrence. *Festo*, 234 F.3d at 613-15.

B. *This Court Has Not Countenanced an Inflexible Bar*

In *Warner-Jenkinson*, the patentee (Hilton Davis) amended a claim during prosecution to introduce a limitation of "approximately pH 6.0" in a pH range extending upwardly to approximately pH 9.0. The upper pH limitation was inserted to avoid a prior art reference. There was no indication in the record why the lower pH limit was inserted. Petitioner Warner-Jenkinson's accused process used a pH of 5.0.

Petitioner argued that the amendment to approximately pH 6.0 barred Hilton Davis from reaching petitioner's process at pH 5.0, advocating a rule that "any surrender of subject

matter during patent prosecution, regardless of the reason for such surrender, precludes recapturing any part of that subject matter, even if it is equivalent to the matter expressly claimed." This Court expressly rejected this argument. *Warner-Jenkinson*, 520 U.S. at 30. Indeed, this Court pointed out:

> But Petitioner reaches too far in arguing that the reason for an amendment during patent prosecution is irrelevant to any subsequent estoppel. *Id.*

The Court stated:

> Our prior cases have consistently applied prosecution history estoppel only where claims have been amended for a limited set of reasons, and we see no substantial cause for requiring a more rigid rule invoking an estoppel regardless of the reasons for a change. *Id.*, at 32.

The Court accordingly ruled that inclusion of the lower pH 6.0 limitation did not necessarily preclude a finding of infringement based on equivalency: "[W]hile a lower limit of 6.0, by its mere inclusion, became a material element of the claim, that did not necessarily preclude the application of the doctrine of equivalents as to that element." *Id.*

C. Festo *Has Unfairly (And Improperly) Changed the Rules of the Game*

The Federal Circuit has in effect overruled 150 years of this Court's precedent and 18 years of its own. Judge Lourie, concurring, remarked, that if this Court in *Dickinson v. Zurko*, 527 U.S. 150 (1999), could overrule decades of practice in order to bring the Federal Circuit's standard of judicial review of PTO fact-findings in line with the standard of review applied to other administrative agencies, then *stare decisis* should be no bar to the "important policy decisions" that the majority thought justified its extreme departure from precedent. *Festo*, 234 F.3d at 597.

In *Warner-Jenkinson*, this Court admonished that "the various policy arguments now made by both sides are thus best addressed to Congress, not this Court." Yet, on the basis of policy, the Federal Circuit has "despite the absence of development of policy issues on this appeal, legislated a new balance between inventor and imitator." *Festo*, 234 F.3d at 638 (Newman, J., dissenting).

When the petitioner in *Warner-Jenkinson* urged a bright line test tantamount to the one the majority in *Festo* has "legislated," this Court adamantly ruled this "was not a sufficient reason for adopting such a rule":

> That petitioner's rule might provide a brighter line for determining whether a patentee is estopped under certain circumstances is not a sufficient reason for adopting such a rule. . . . To change so substantially the rules of the game now could very well subvert the various balances the PTO sought to strike when issuing the numerous patents which have not expired and which would be affected by our decision.

520 U.S. at 32, n.6.

This Court's pronouncement about so substantially changing the "rules of the game" is no less true in this case than in *Warner-Jenkinson*. The Federal Circuit's "legislation" is more appropriately left to the Congress, where measures can be taken to ameliorate the effect on patentees of a change in rules that overturns 150 years of this Court's precedent and 18 years of the Federal Circuit's—rules on which patent applicants have relied. The devastating effect of these rulings, by which any amendment, however remotely related to one of the patent statute's provisions, erects an absolute bar to availability of the doctrine of equivalents, is demonstrated specifically by the application of these rulings to the patents in this case.

SMC's product literally met each element of Festo's Carroll patent except one: "a pair of sealing rings". SMC employed a single two way sealing ring. SMC's sealing ring

was found an infringing equivalent by the district court, which finding was upheld by the Federal Circuit before this Court's decision in *Warner-Jenkinson*. SMC's product also met literally each element of the Stoll patent, except two: the "sealing rings" and a "magnetizable sleeve." The Stoll patent was also found infringed under the doctrine of equivalents, both at the district court level and on appeal preceding *Warner-Jenkinson*.

In the prosecution of the Carroll patent, appellant Festo had sought reexamination (*see* 35 U.S.C. § 302, *et seq.*) in light of German Patent No. 1,982,379. After the reexamination request was granted but before reexamination on the merits, Festo cancelled original claim 1 and added a new claim that differed from the original claim in several ways, including the addition of "a pair of resilient sealing rings." Because sealing rings were described in the cited German patent, this element did not impart a distinction from the prior art. The sealing rings were not amended during subsequent prosecution. No argument by the applicant was directed to the sealing rings, and no issue of patentability concerning the sealing rings was raised by the examiner. Festo's argument during reexamination related only to other components of the device. The examiner mentioned several components of the combination in the "Reasons for Allowance," but not the sealing rings. Nonetheless, the majority decision in *Festo* held that it sufficed as a "narrowing amendment" that the claim as a whole was narrowed when the sealing rings were added before examination, so as to bar access to the doctrine of equivalents for that element.

In the prosecution of the Stoll patent, the patent application was filed in the United States as the English translation of a prior German patent application. In the first action in the United States, the examiner rejected the application under 35 U.S.C. §112 ¶ 1, stating: "Exact method of operation unclear. Is device a true motor or magnetic clutch?" The examiner also objected to claims 4-12, which apparently were filed in

the same form as in the foreign priority application, as being in improper multiple dependent form, citing 35 U.S.C. §112 ¶ 2. The examiner also listed three references "believed pertinent." The references were not discussed and no rejection was made based on prior art.

In response, Stoll explained the invention's method of operation and amended the specification accordingly. Stoll also rewrote the claims, eliminating the improper multiple dependent form. Original claim 1 included as a limitation "sealing means at each end [of a piston] for wiping engagement with an internal surface of the tubular part". Stoll cancelled original claim 1 and filed a new independent claim that included the subject matter of original dependent claims 4 and 8, which were correspondingly cancelled. Original claim 4 specified that the "sealing means comprise sealing rings," and claim 8 named an additional element: a "sleeve made of a magnetizable material, which encircles the hollow cylindrical assembly." Thus new claim 1 was narrower as a whole because it replaced "sealing means" with "sealing rings" and added a "sleeve made of a magnetizable material and encircles said tube". The record stated no reason for these changes. Stoll also submitted two German patents that were cited during examination of the corresponding German application, with the explanation that "neither of these references discloses the use of structure preventing the interference of impurities located inside the tube . . . while the arrangement is moved along the tube." The examiner then allowed the claims.

Thus, claim 1 was not rejected on prior art but simply as "unclear". In response, the language "sealing means at each end [of a piston] for wiping engagement with an internal surface of the tubular part . . ." was replaced with "sealing rings located axially outside said guide rings for wiping said internal wall as said piston moves along said tube . . . ." The German references did not disclose "the use of structure preventing the interference by impurities inside the tube . . .

while the arrangement is moved along the tube." Thus the importation from dependent claim 4 of "sealing rings" to replace the "sealing means" in original claim 1 did not narrow scope to avoid the German references—since the "sealing means" limitation of original claim 1 already avoided those references. The *Festo* majority ruled that all access to the doctrine of equivalence was barred not only as to the "sealing rings" element, but also as to the "magnetizable sleeve"—notwithstanding that the scope of that element from original dependent claim 8 was not in the least narrowed.

To further illustrate the consequences of the absolute bar rule "legislated" by the majority in *Festo*, suppose that claim 1 were rejected on prior art, but claims 4 and 8 were only objected to as drafted in improper dependent form. Claims 4 and 8 would presumably be allowed if rewritten to include the limitations of rejected claim 1, from which they depended. Under the rule of *Festo*, access to the doctrine of equivalents would be barred for the elements added by amendment. But if claims 4 and 8 had been presented as independent claims in the first place, they would have been allowed without amendment, and thus with full access to the doctrine of equivalents. This result elevates form over substance.

Nothing in reason or policy supports the *Festo* inflexible bar rule. Prosecution history estoppel is a doctrine grounded in equitable principles, as is the doctrine of equivalents. Equity does not substitute form for substance. Paraphrasing the language of this Court in *Graver Tank*, 339 U.S. at 609, and substituting "prosecution history estoppel" for "equivalency":

> What constitutes *prosecution history estoppel* must be determined against the context of the patent, the prior art, and the particular circumstances of the case. *Prosecution history estoppel*, in the patent law, is not the prisoner of a formula and is not an absolute to be considered in a vacuum.

D. *The Federal Circuit's "Intrinsic Evidence" Rule Is Inconsistent With Warner-Jenkinson*

In *Warner-Jenkinson*, this Court established a *rebuttable* presumption that unexplained claim amendments are related to patentability and (thus) may limit application of the doctrine of equivalents. 520 U.S. at 33-34. This presumption was said to give "proper deference to the role of claims in defining an invention and providing public notice, and to the primacy of the PTO in ensuring that the claims allowed cover only subject matter that is properly patentable in a proffered patent application." *Id.* By limiting the evidence that may be used to rebut this presumption to the intrinsic prosecution record, *Festo* has trivialized the structure that this Court carefully erected for addressing unexplained amendments. As one of the *Festo* judges noted in dissent: "The rebuttable presumption thereby becomes irrebuttable, because the prosecution record is necessarily silent in order for the presumption to arise at all." *Festo*, 234 F.3d at 632.

This amicus curiae agrees with the dissenting judge. This Court did not create an empty procedural expedient. If the record does not reveal the reason for the amendment, and if the patentee is to have an effective right of rebuttal, then he must be permitted to go outside the record and produce his evidence.

In the interests of "certainty," the *Festo* majority has created a rule of evidence that conditions a patentee's access to the doctrine of equivalents on an accident of attorney practice. As noted above, there are a variety of claim amendments that, even if unexplained in the intrinsic record, are easily explained by extrinsic evidence. The Federal Circuit's decision to deny patentees access to that evidence is inconsistent both with *Warner-Jenkinson* and with the basic rules under which the Federal Courts operate. *See* Fed. R. Civ. P. 1 (providing that the Rules of Civil Procedure "shall be construed and administered to secure the just, speedy and

inexpensive determination of every action"); Fed. R. Evid. 102 (providing that the Rules of Evidence be construed "to the end that the truth may be ascertained and proceedings justly determined").

CONCLUSION

HIPLA respectfully requests that this Court reverse the decision of the Federal Circuit, insofar as it is based upon the "intrinsic evidence" and "inflexible bar" rules identified above.

Respectfully submitted,

SHARON A. ISRAEL, PRESIDENT *
HOUSTON INTELLECTUAL PROPERTY
LAW ASSOCIATION
L. GENE SPEARS
TIM L. BURGESS
1100 Louisiana Street, Ste. 1800
Houston, Texas 77002
(713) 286-2035

* Counsel of Record

Counsel for Amicus Curiae

AUG 31 2001 (31)

Supreme Court, U.S.
FILED
AUG 31 2001
OFFICE OF THE CLERK

No. 00-1543

In the

Supreme Court of the United States

FESTO CORPORATION,
PETITIONER,

v.

SHOKETSU KINZOKU KOGYO KABUSHIKI CO., LTD.,
a/k/a/ SMC CORPORATION
AND SMC PNEUMATICS, INC.,
RESPONDENTS.

On Writ of Certiorari to the United States Court of Appeals for the Federal Circuit

BRIEF FOR BOSE CORPORATION AS *AMICUS CURIAE* IN SUPPORT OF PETITIONER

CHARLES HIEKEN
COUNSEL OF RECORD
ROBERT E. HILLMAN
FRANK P. PORCELLI
CHARLES H. SANDERS
FISH & RICHARDSON
225 FRANKLIN STREET
Boston, MA 02110-2804
(617) 542-5070
Counsel for Bose Corp.

16 pp

QUESTIONS PRESENTED

The questions presented by the Petitioner are:

1) Whether every claim-narrowing amendment designed to comply with any provision of the Patent Act—including those provisions not related to prior art—automatically creates prosecution history estoppel regardless of the reason for the amendment; and

2) Whether the finding of prosecution history estoppel completely bars the application of the doctrine of equivalents.

TABLE OF CONTENTS

	Page
QUESTIONS PRESENTED	i
TABLE OF AUTHORITIES	iii
INTEREST OF THE *AMICUS CURIAE*	1
SUMMARY OF ARGUMENT	1
ARGUMENT	2
I. *Warner-Jenkinson* Stands For A Nuanced, Rather Than Bright Line, Approach To When Prosecution History Estoppel Arises And To Its Scope Once In Place	2
II. The Federal Circuit's Bright Line Rules Are In Direct Conflict With *Warner-Jenkinson*	6
III. *Festo* Unfairly Deprives Patent Owners Of Property Rights In Patents Already In Force	9
CONCLUSION	12

TABLE OF AUTHORITIES

Cases	Page(s)
Datascope Corp. v. SMEC, Inc., 879 F.2d 820 (Fed. Cir. 1989)	10
Festo Corp. v. Shoketsu Kinzoku Kogyo Kabushiki Co., 234 F.3d 558 (Fed. Cir. 2000) (*en banc*)	*passim*
Hilton Davis Chemical Co. v. Warner-Jenkinson Co., 62 F.3d 1512 (Fed. Cir. 1995) (*en banc*), *rev'd and remanded*, 520 U.S. 17 (1996)	3
Hughes Aircraft Co. v. United States, 717 F.2d 1351 (Fed. Cir. 1983)	10
Litton Systems, Inc. v. Honeywell, Inc., 140 F.3d 1449 (Fed. Cir. 1998)	10
Warner-Jenkinson Co. v. Hilton Davis Chemical Co., 520 U.S. 17 (1997)	*passim*

Statutes

35 U.S.C. § 112	*passim*
U.S. CONST., art. I, § 8, cl. 8	11

Miscellaneous

Brief for the United States as *Amicus Curiae*, 1996 WL 172221, *Warner-Jenkinson Co. v. Hilton Davis Chemical Co.*, 520 U.S. 17 (1997) (No. 95-728)	4, 5

INTEREST OF THE *AMICUS CURIAE*

Amicus Curiae Bose Corporation, supporting Petitioner, makes large investments in research and development of new technology and has for years depended upon an effective patent system to justify those investments.[1] Meaningful protection requires that the courts not erect arbitrary barriers to patent enforcement that permit competitors to copy the real substance of patented innovations. Bose believes that the decision of the United States Court of Appeals for the Federal Circuit in *Festo Corp. v. Shoketsu Kinzoku Kogyo Kabushiki Co.*, 234 F.3d 558 (Fed. Cir. 2000) (en banc), by blocking most applications of the doctrine of equivalents, seriously undermines the patent system and its utility to encourage investment.

SUMMARY OF ARGUMENT

The en banc decision of the Federal Circuit is in serious and substantial conflict with both the letter and spirit of this Court's re-validation of the doctrine of equivalents in *Warner-Jenkinson Co. v. Hilton Davis Chemical Co.*, 520 U.S. 17 (1997). First, the Federal Circuit ignored the clear dictate in *Warner-Jenkinson* that a whole category of amendments unrelated to prior art issues would not automatically give rise to prosecution history estoppel. The Federal Circuit contravened that decision by

---

[1] Letters of consent from the parties accompany this brief. No counsel for a party authored this brief in whole or in part and no person or entity, other than the *Amicus Curiae*, its members, or its counsel made a monetary contribution to the preparation or submission of this brief.

expanding estoppel to reach all narrowing amendments related to any statutory prerequisite for the patent grant. Second, the Federal Circuit ignored this Court's instruction that, even where an amendment relates to prior art and thus creates an estoppel, the reason for the amendment is still to be considered in applying the estoppel. To the contrary, the Federal Circuit instituted an absolute bar against any equivalents to an amended claim limitation. Finally, in legislating these "bright line" rules, the Federal Circuit was plainly motivated by a desire to impose the very same "certainty" that this Court deemed outweighed by the need for fairness when it declared in *Warner-Jenkinson*: "Today we adhere to the doctrine of equivalents." 520 U.S. at 41.

Bose believes that in *Festo* the Federal Circuit, by wiping out long-standing precedent on which the owners of over one million patents now in force relied in prosecuting their applications, has unjustly upset the settled expectations of patent owners and risks the future effectiveness of the patent system as an incentive for investment in technology.

ARGUMENT

I. *Warner-Jenkinson* Stands For A Nuanced, Rather Than Bright Line, Approach To When Prosecution History Estoppel Arises And To Its Scope Once In Place.

The doctrine of equivalents fundamentally elevates fairness, and the nuanced, case-by-case judgment it requires, over the increased certainty

that a bright line restriction of patents to the absolute literalism of their claims would provide. In this way the doctrine "tempers the rigor of literalness" and strengthens the patent system by evaluating the proper scope of patent protection on the basis of real substance rather than an arbitrary rule. *Hilton Davis Chemical Co. v. Warner-Jenkinson Co.*, 62 F.3d 1512, 1531 (1995) (en banc) (Newman, J., concurring), *rev'd and remanded*, 520 U.S. 17 (1997). This Court squarely confirmed the vitality of the doctrine in *Warner-Jenkinson*. In the same spirit, this Court specifically rejected bright line approaches to when prosecution history estoppel arises to bar application of the doctrine and how the scope of an estoppel, once it arises, should be gauged.[2]

Specifically, with respect to when an estoppel arises, this Court rejected a proposed bright line rule that every narrowing amendment would create an estoppel. Instead, the Court distinguished between two categories of amendments. One category consisted of amendments "related to patentability," 520 U.S. at 33, which the Court noted were usually made to distinguish prior art or avoid obviousness. *See id.* at 30-31. The second category consisted of amendments made for the "variety of other reasons why the PTO [Patent and Trademark Office] m[ight] request a change in claim language." *Id.* at 31. Only

---

[2] The Court, by way of balance, also set careful safeguards against overbroad use of the doctrine by requiring element-by-element application, establishing a presumption that an unexplained amendment gives rise to an estoppel, and encouraging district courts to enforce such safeguards by granting summary judgment. *See* 520 U.S. at 39 n.8.

amendments in the first category would necessarily give rise to an estoppel. Amendments in the second category, even though made in response to the "Patent Office's insistence upon a change in the claims," *id.*, and thus imposed as a condition of the patent grant, would "not necessarily preclude infringement by equivalents of that element." *Id.* at 33.

In presenting its reasons for distinguishing between these categories of amendments, this Court adhered to its time-honored approach:

> And if the PTO has been requesting changes in claim language without the intent to limit equivalents or, indeed, with the expectation that language it required would in many cases allow for a range of equivalents, we should be extremely reluctant to upset the basic assumptions of the PTO without substantial reason for doing so. Our prior cases have consistently applied prosecution history estoppel only where claims have been amended for a limited set of reasons, and we see no substantial cause for requiring a more rigid rule invoking an estoppel regardless of the reasons for a change.

Id. at 32. For examples of amendments in the second category, the Court cited pages 22-23 of the Brief for the United States as *Amicus Curiae*, which in turn described amendments relating to the requirements of 35 U.S.C. § 112: enablement, specificity,

definiteness, and the like.[3] *See* 520 U.S. at 31-32. Thus, *Warner-Jenkinson* made clear that § 112-related amendments, even though required by the PTO to secure the issuance of a patent, are not in the category of amendments "related to patentability" that necessarily create an estoppel.[4] *Id.* at 33.

Warner-Jenkinson confirmed the same "look at the reason for the amendment" approach in describing how the scope of an estoppel, once created, should be determined. Because the "scope of estoppel" question was not squarely raised in *Warner-Jenkinson*, the Court devoted less discussion to it than to the question of when an estoppel arises. Nevertheless, in footnote seven the Court clearly signaled that there would be no absolute bar to equivalents even when the amendment distinguished prior art and thus created an estoppel:

> We do not suggest that, where a change is made to overcome an objection based on the prior art, a court is free to review the

---

[3] The Brief for the United States as *Amicus Curiae* stated that amendments "to reflect the scope of what was enabled or to add specificity," as well as "claim changes or arguments made in order to more particularly point out the applicant's invention," should "not necessarily estop" the patentee from obtaining protection under the doctrine of equivalents. Brief for the United States as *Amicus Curiae* at 22-23, 1996 WL 17221, *Warner-Jenkinson Co. v. Hilton Davis Chemical Co.*, 520 U.S. 17 (1997) (No. 95-728) (internal quotation marks and citation omitted).

[4] This Court's exclusion of § 112-related amendments from the "related to patentability" category is consistent with Congress' structure of Title 35, in that § 112 does *not* appear under Chapter 10 entitled "Patentability of Inventions."

> correctness of that objection when deciding whether to apply prosecution history estoppel. As petitioner rightly notes, such concerns are properly addressed on direct appeal from the denial of a patent, and will not be revisited in an infringement action. What *is* permissible for a court to explore is the reason (right or wrong) for the objection *and the manner in which the amendment addressed and avoided the objection.*

Id. at 33 n.7 (citation omitted and second emphasis added).

Thus, even with respect to amendments made to distinguish prior art, the scope of an estoppel would be based on the real substance of what happened during prosecution—the nature of the prior art objection and the rationale for how the amendment distinguished the art. This approach was aligned with, and for consistency of policy really dictated by, the Court's basic re-validation of the doctrine of equivalents itself, emphasizing nuanced fairness over bright line certainty.

We now turn to how the en banc Federal Circuit decision in *Festo* is contrary to both the letter and animating spirit of *Warner-Jenkinson*.

II. The Federal Circuit's Bright Line Rules Are In Direct Conflict With *Warner-Jenkinson*

Little need be said to show that the Federal Circuit's decision in *Festo* runs roughshod over *Warner-Jenkinson*. Whereas this Court made

explicit that § 112-related amendments should be treated differently from those to overcome prior art, the Federal Circuit lumped them all together. The Federal Circuit not only thus reversed this Court's treatment of § 112-related amendments but also essentially emptied the category of "the *variety* of other reasons why the PTO may request a change in claim language" that this Court held did not necessarily create an estoppel.[5] 520 U.S. at 31 (emphasis added).

Similarly, in holding an estoppel covers all equivalents, the Federal Circuit contradicted both the overall nuanced approach of *Warner-Jenkinson* and the explicit indication in footnote seven that the underlying rationale for an amendment should be considered even when it relates to prior art and thus creates an estoppel. *See id.* at 33 n.7. Only by considering the full context of an amendment can one determine how much has in fact been surrendered and therefore whether an estoppel should bar a particular equivalent.

Careful reading of the majority and concurring opinions of the Federal Circuit makes clear that its imposition of new bright line rules governing estoppel was not motivated by concerns specific to applying the more flexible approach required by *Warner-Jenkinson*. Instead, the Federal Circuit was motivated, pure and simple, by a distaste for the lack

---

[5] Patentees' resultant reluctance to amend will sacrifice the increased clarity that §112-related amendments offer the public regarding the scope of the claims, thus ironically taking away some of the certainty that motivated the Federal Circuit to impose the absolute rules of *Festo* in the first place.

of complete certainty that is an inherent by-product of the doctrine of equivalents itself, a degree of uncertainty that *Warner-Jenkinson* held was an acceptable price to pay for the fairness and effectiveness that the doctrine preserved in the functioning of the patent system.

The majority opinion repeatedly invokes the notice function of claim language. Yet that notice function is no more undermined by a finding of equivalence to an amended claim limitation than it is by a finding of equivalence to an original limitation; in each case, the literal boundary of the claim is extended to prevent infringement by an equivalent that uses the substance of the claim limitation. In his separate concurrence, Judge Plager, a member of the majority, decried at length the "indeterminate nature of the test" for the doctrine of equivalents itself, and then remarked, "The net effect has been that all too often there is no way to know whether a particular product infringes under the doctrine until a panel of this court says so; the rule of analysis gives little real guidance, and equally little predictability."[6] *Festo*, 234 F.3d at 592 (Plager, J., concurring). Similarly, in his separate concurrence, majority member Judge Lourie complained that, under the doctrine of equivalents, "clever attorneys

[6] The Federal Circuit's actual record casts serious doubt on this statement's validity. District courts are able to grant summary judgment of no infringement under the doctrine of equivalents, and these decisions more often than not withstand de novo review. Since this Court's *Warner-Jenkinson* decision in 1997, there have been at least 54 reported decisions of the Federal Circuit involving district court grants of summary judgment of no infringement under the doctrine of equivalents, and the Federal Circuit affirmed 35 (or 65%) of them.

can argue infringement outside the scope of claims all the way through this court of appeals," and that "the specter of unpredictable equivalence claims haunts too many business decisions." *Id.* at 596-97.

In its specific rulings and its overall approach, the Federal Circuit has violated both the letter and spirit of this Court's careful and balanced affirmation of the doctrine of equivalents in *Warner-Jenkinson*. In concluding that, "after nearly twenty years of experience" in applying the doctrine of equivalents, the "current state of the law regarding the scope of equivalents that is available when prosecution history estoppel applies is 'unworkable'" and on that basis jettisoning well-established precedent, the majority has in effect legislated a change in the patent laws that requires reversal by this Court.[7] *Festo*, 234 F.3d at 574-75.

III. *Festo* Unfairly Deprives Patent Owners Of Property Rights In Patents Already In Force.

Retroactive change in the rules—which is what the Federal Court's decision in *Festo* amounts to—almost always smacks of unfairness. Here we face the ownership of over a million patents now in force that were prosecuted on the reasonable assumption that amendments responding to § 112 rejections

[7] Not only is such a conclusion one that, if it is to be reached at all, should be reached by Congress, but it is actually at odds with the widespread view of industry that the patent system over the last twenty years has in fact been revitalized—ironically, in significant part due to the supportive role played by the Federal Circuit—and works well.

would not automatically give rise to an equivalents-defeating estoppel. Patentees also relied on long-standing precedent, including over fifteen years of Federal Circuit cases ranging from *Hughes Aircraft Co. v. United States*, 717 F.2d 1351 (Fed. Cir. 1983) to *Litton Systems, Inc. v. Honeywell, Inc.*, 140 F.3d 1449 (Fed. Cir. 1998), establishing that even amendments responding to prior art rejections would not automatically bar all equivalents. Lawyers, counseled by cases such as *Datascope Corp. v. SMEC, Inc.*, 879 F.2d 820 (Fed. Cir. 1989), instructing that competent infringement opinions should consider the doctrine of equivalence, have written numerous opinions based on these assumptions, and clients have relied on them. Billions of dollars have been invested in research and development with this shared understanding of the protection that the patent system would afford.

In the face of all this, the Federal Circuit has now abruptly announced in *Festo* that its own experience has convinced it that these assumptions are "unworkable" and must be withdrawn. No matter that over a million patent applications were prosecuted in accordance with a strategy reasonably based on a "no sudden death by amendment" foundation.[8] No matter that thousands of license agreements were reached with economic provisions

[8] Few patent applications emerge from the PTO without claim amendments, and typically the amendments are made at the point of novelty to distinguish close prior art. Ironically, although the justification for providing a scope of equivalence has greatest force with respect to those features at the heart of the invention, *Festo* dictates that the patentee is unlikely to receive any scope of equivalence on them.

resting on that same foundation. In one fell swoop, acting in effect as a legislative body conducting its own foray into industrial policymaking, the Federal Circuit has changed the rules with retroactive effect.

This sudden and unwarranted change, in conflict with well-established precedent, rests not on any legal theory but rather on the Federal Circuit's desire to reshape basic innovation policy. In a very real sense the issue is about the ownership of property rights in technology that embodies the essence of a patented invention, but, due to colorable but insubstantial change, lies just outside literal claim language. Until *Festo* this intellectual property was typically owned by the patentee, who created its animating center, unless resort to the doctrine of equivalents would conflict with the genuine substance of a concession on patentability made in the PTO, or would encroach on prior art. From now on, however, if *Festo* were to stand, substance will no longer matter. Any narrowing amendment, made for virtually any reason, will automatically bar all access to the doctrine of equivalents.[9] The property just outside the literal claim language, even when it is in fact equivalent to what is claimed, and thus flows directly from the patentee's contribution to the "Progress of Science and the Useful Arts," will automatically and always be free for the copyist. U.S. CONST., art. I, § 8, cl. 8.

[9] As seen above, the Federal Circuit in *Festo* defined "patentability" far more broadly than this Court intended in *Warner-Jenkinson*, leaving virtually no reason for an amendment that would not be swept in by this overly expansive definition.

CONCLUSION

For the foregoing reasons, the en banc decision of the Federal Circuit in *Festo* should be reversed. This Court should re-affirm what it already said in *Warner-Jenkinson*—that a § 112-related amendment does not necessarily create an estoppel and that an estoppel created by a prior art-related amendment does not necessarily bar all application of the doctrine of equivalents.

Respectfully submitted,

CHARLES HIEKEN
Counsel of Record
ROBERT E. HILLMAN
FRANK P. PORCELLI
CHARLES H. SANDERS
FISH & RICHARDSON P.C.
225 FRANKLIN STREET
Boston, MA 02110-2804
(617) 542-5070
Counsel for Bose Corp.

AUG 31 2001 (38)

Supreme Court, U.S.
FILED
AUG 31 2001
CLERK

No. 00-1543

In the Supreme Court of the United States

FESTO CORPORATION,

PETITIONER,

v.

SHOKETSU KINZOKU KOGYO KABUSHIKI CO., LTD., A/K/A SMC CORPORATION AND SMC PNEUMATICS, INC.,

RESPONDENTS.

On Writ of Certiorari to the United States Court of Appeals for the Federal Circuit

BRIEF OF AMICUS CURIAE FEDERAL CIRCUIT BAR ASSOCIATION IN SUPPORT OF PETITIONER

GEORGE E. HUTCHINSON
EXECUTIVE DIRECTOR,
FEDERAL CIRCUIT
BAR ASSOCIATION
1300 I Street, N.W.
Suite 700
Washington, D.C. 20005
(202) 408-4000

CLAIRE LAPORTE
(Counsel of Record)
MITCHELL J. MATORIN
ROBERT L. BOCCHINO JR.
MEGAN H. MACK
MARK A. REILLY
FOLEY, HOAG & ELIOT LLP
One Post Office Square
Boston, MA 02109
(617) 832-1000
Counsel for Amicus Curiae
Federal Circuit Bar Association

34 pp

TABLE OF CONTENTS

STATEMENT OF INTEREST OF *AMICUS CURIAE* 1

SUMMARY OF THE ARGUMENT 1

ARGUMENT 3

I. THE COMPLETE BAR DOES NOT FAIRLY OR EFFECTIVELY IMPLEMENT THE DOCTRINE OF PROSECUTION HISTORY ESTOPPEL. 4

A. Under the Complete Bar, the Scope of the Estoppel Is Unrelated to the Conduct Giving Rise to the Estoppel. 4

B. The Complete Bar Is Unfair in Its Retroactive Application. 7

C. The Complete Bar Does Not Promote the "Notice Function" of Patent Claims and May Have Incidental Negative Effects. 9

II. THE FLEXIBLE BAR HAS BEEN AND CAN BE RATIONALLY AND CONSISTENTLY APPLIED. ... 11

A. Several Basic Principles Have Long Guided the Application of the Flexible Bar. 11

1. The Asserted Scope of Equivalents Must Be Consistent with Arguments Made to the Patent and Trademark Office. 12

2. The Asserted Scope of Equivalents Must Not Capture the Prior Art. 14

3. The Asserted Scope of Protection Must Be Narrower Than What the Patentee Claimed Before the Amendment. 16

4. If the Above Criteria Are Met, There Is No Estoppel. 17

B. There Was No Genuine Conflict in the Prior Case Law Applying the Flexible Bar. 20

C. The Flexible Bar Can Be Most Consistently Applied by Placing the Burden on the Patentee to Demonstrate a Scope of Protection Consistent with the Prosecution History. 24

CONCLUSION 28

TABLE OF AUTHORITIES

Cases

Black & Decker, Inc. v. Hoover Serv. Ctr., 886 F.2d 1285 (Fed. Cir. 1989) 20

Cohen v. Cowles Media Co., 501 U.S. 663 (1991) 5

Control Resources, Inc. v. Delta Elecs., Inc., 133 F. Supp. 2d 121 (D. Mass. 2001) 6

Desper Prods., Inc. v. QSound Labs, Inc., 157 F.3d 1325 (Fed. Cir. 1998) 13

Environmental Instruments, Inc. v. Sutron Corp., 877 F.2d 1561 (Fed. Cir. 1989), *overruled on other grounds by Cardinal Chem. Co. v. Martin Int'l, Inc.*, 508 U.S. 83 (1993) 14

Exhibit Supply Co. v. Ace Patents Corp., 315 U.S. 126 (1942) 16, 17

Festo Corp. v. Shoketsu Kinzoku Kogyo Kabushiki Co., 234 F.3d 558 (Fed. Cir. 2000) (en banc) ..... passim

Graver Tank & Mfg. Co. v. Linde Air Prods. Co., 339 U.S. 605 (1950) 10

Great Northern Corp. v. Davis Core & Pad Co., 782 F.2d 159 (Fed. Cir. 1986) 20

Hubbell v. United States, 179 U.S. 77 (1900). 12, 13, 26

Hughes Aircraft Co. v. United States, 717 F.2d 1351 (Fed. Cir. 1983) 7, 17, 18

Hurlbut v. Schillinger, 130 U.S. 456 (1889) 20

Insituform Techs., Inc. v. Cat Contracting, Inc., 99 F.3d 1098 (Fed. Cir. 1996) 19

Keystone Driller Co. v. Northwest Eng'g Corp., 294 U.S. 42 (1935) 15, 16

Kinzenbaw v. Deere & Co., 741 F.2d 383 (Fed. Cir. 1984) 20, 21, 22, 23

Laitram Corp. v. Morehouse Indus., Inc., 143 F.3d 1456 (Fed. Cir. 1998) 15

Litton Sys., Inc. v. Honeywell, Inc., 140 F.3d 1449 (Fed. Cir. 1998) 16

Mannesmann Demag Corp. v. Engineered Metal Prods. Co., 793 F.2d 1279 (Fed. Cir. 1986) 16, 17

Merck & Co. v. Mylan Pharms., Inc., 190 F.3d 1335 (Fed. Cir. 1999) 16

New Hampshire v. Maine, ___ U.S. ___, 121 S. Ct. 1808 (2001) 5

Payne v. Tennessee, 501 U.S. 808 (1991) 7

Phoenix Caster Co. v. Spiegel, 133 U.S. 360 (1890) 14, 15

Prodyne Enters., Inc. v. Julie Pomerantz, Inc., 743 F.2d 1581 (Fed. Cir. 1984) 20, 23, 24

Quill Corp. v. North Dakota, 504 U.S. 298 (1992) 8

Royer v. Coupe, 146 U.S. 524 (1892) 16, 17

Sage Prods., Inc. v. Devon Indus., Inc., 126 F.3d 1420 (Fed. Cir. 1997) 5

Senmed, Inc. v. Richard-Allan Med. Indus., Inc., 888 F.2d 815 (Fed. Cir. 1989), *overruled on other grounds by Cardinal Chem. Co. v. Martin Int'l, Inc.*, 508 U.S. 83 (1993) 13

Wang Labs., Inc. v. Toshiba Corp., 993 F.2d 858 (Fed. Cir. 1993) 13, 14

Warner-Jenkinson Co. v. Hilton Davis Chem. Co., 520 U.S. 17 (1997) 8, 23, 24, 25, 27

Zenith Labs., Inc. v. Bristol-Myers Squibb Co., 19 F.3d 1418 (Fed. Cir. 1994) 5

Rules

Supreme Court Rule 37.3(a) 1

Supreme Court Rule 37.6 1

Other Authorities

William M. Atkinson et al., *Was* Festo *Really Necessary?*, 83 J. Pat. & Trademark Off. Soc'y 111 (2001) 5, 6

Brief of *Amicus Curiae* Federal Circuit Bar Association in Support of Petition for Writ of *Certiorari* (May 9, 2001) 9, 10

Donald S. Chisum, *Chisum on Patents* (2000) 6, 22

Note, *To Bar or Not To Bar: Prosecution History Estoppel after* Warner-Jenkinson, 111 Harv. L. Rev. 2330, 2335-36 (1998) 22

Restatement (Second) of Contracts § 90 (1981) 5

STATEMENT OF INTEREST OF *AMICUS CURIAE*

The Federal Circuit Bar Association ("FCBA") is a national organization comprising approximately 2,400 attorneys whose practice concerns the United States Court of Appeals for the Federal Circuit in all aspects of its jurisdiction. The FCBA offers a forum for common concerns and dialogue between the bar and the judges of the Federal Circuit. One of the purposes of the FCBA is to offer assistance and advice to the federal courts, including briefs *amicus curiae*, on matters affecting practice before the Federal Circuit and lower tribunals.[1]

The members of the FCBA represent a cross-section of the community affected by the patent laws. The clients of the FCBA's members include not only patent holders, but also licensees and members of the public whose goal is to avoid or defend against accusations of infringement.

Pursuant to Supreme Court Rule 37.3(a), the FCBA has conferred with the parties regarding the filing of this brief *amicus curiae*, and both parties have consented to its filing. Evidence of the written consent of the parties has been filed separately herewith.

SUMMARY OF THE ARGUMENT

The majority decision below, *Festo Corp. v. Shoketsu Kinzoku Kogyo Kabushiki Co.*, 234 F.3d 558 (Fed. Cir. 2000) (en banc), abrogated the longstanding "flexible bar" approach to prosecution history estoppel, under which a narrowing claim amendment would preclude a later assertion of infringement by equivalents only if the applicant had actually surrendered the accused subject matter through the amendment. Under the Federal Circuit's new rule, which it

---

[1] Pursuant to Supreme Court Rule 37.6, the FCBA states that no counsel for a party authored this brief in whole or in part. No person or entity, other than the *amicus curiae*, its members, or its counsel, made any monetary contribution to the preparation or submission of the brief.

termed a "complete bar," the patentee is absolutely precluded from asserting infringement by equivalents as to narrowing amendments made for patentability reasons, regardless of whether the accused subject matter was actually surrendered by the amendment.

1. The Federal Circuit's "complete bar" is unjustified for at least three reasons. First, it violates a basic principle, common to estoppel doctrines in all areas of the law, that the scope of the estoppel should be related to the conduct giving rise to the estoppel. Under the complete bar, the court examines only whether a claim amendment is narrowing, rather than whether the accused subject matter was in fact surrendered by the amendment. Second, the complete bar, which represents a significant break from prior law, is unfair in its retroactive application. By eliminating available equivalents even as to subject matter not disclaimed in an amendment, the decision below abruptly narrowed the scope (and reduced the value) of existing patents, all of which were prosecuted in light of the flexible bar. Third, although the Federal Circuit asserted that the complete bar would improve the "notice function" of patents by making the scope of patent coverage clearer, it may in fact have the opposite effect. Because it discourages claim amendments while encouraging "stealth" prosecution tactics, the complete bar may well reduce the transparency of prosecution history as a whole.

2. The Federal Circuit justified its adoption of the complete bar by suggesting that the flexible bar had become "unworkable," but this assertion is incorrect. While the application of the flexible bar was based on a careful examination of the facts of each case, and therefore was not always simple, it was hardly "unworkable." Rather, the flexible bar had long been applied according to several basic principles developed by this Court and the Federal Circuit. First, the scope of equivalents asserted by the patentee must

be consistent with arguments made to the Patent and Trademark Office during prosecution of the patent. Second, the asserted scope of equivalents cannot capture the prior art. Third, the asserted scope of equivalents cannot be so broad as to restore the claim to the scope it had prior to an amendment. These principles should continue to be applied, with the clarification that the burden should be on the patentee to show that the scope of equivalents asserted meets the standards set forth above. If the patentee can make such a showing, there should be no estoppel.

ARGUMENT

For over one hundred years, this Court and other courts, including the Federal Circuit, have applied the doctrine of prosecution history estoppel by carefully examining the prosecution history to determine what subject matter the patent applicant in fact surrendered through a claim amendment. Under the so-called "flexible bar" in force prior to the decision below, there would be an estoppel only if the patentee's assertion of infringement by equivalents were inconsistent with the earlier surrender of subject matter. In addition to being well established and relied on by numerous patentees, this approach is fair and rational, because it tailors the scope of the estoppel to the scope of what was actually surrendered.

The Federal Circuit abrogated the flexible bar in favor of a "complete bar," under which a narrowing amendment results in complete loss of the doctrine of equivalents as to elements added by the amendment, regardless of the actual scope of surrender. This approach is unfair in its inflexibility and retroactive application and will not ultimately serve the purposes that the Federal Circuit articulated in adopting it. Although the majority below raised legitimate concerns regarding the application of prosecution history estoppel, those concerns can be adequately addressed through proper

application of the principles that have long guided courts in determining the scope of surrender.

Accordingly, prosecution history estoppel arising from a claim amendment should operate as a flexible bar applied in the following way. First, the court should determine whether the claim amendment was narrowing. If it was not, there is no estoppel, because nothing was surrendered. If it was, an estoppel is presumed unless the patentee can show either (1) that the amendment was not made for a substantial reason related to patentability or (2) that there is a scope of protection that both captures the accused device and does not capture material surrendered to the public during prosecution.[2]

I. THE COMPLETE BAR DOES NOT FAIRLY OR EFFECTIVELY IMPLEMENT THE DOCTRINE OF PROSECUTION HISTORY ESTOPPEL.

A. Under the Complete Bar, the Scope of the Estoppel Is Unrelated to the Conduct Giving Rise to the Estoppel.

Prior to the ruling below, prosecution history estoppel was thought to prevent the recapture of subject matter disclaimed during the prosecution of a patent application. Patent applicants would often submit broad claims, which would be narrowed in response to prior art rejections and other patentability concerns raised by the examiner. Applicants would also address the examiner's concerns by making arguments concerning their inventions and the scope of protection they sought. Prosecution history estoppel prevented patentees from contradicting these statements, on

[2] In addition to arguing that prosecution history estoppel should operate as a flexible bar, Petitioner Festo Corporation argued below that there should be no estoppel at all as to amendments made voluntarily or for purposes of clarification, rather than to distinguish prior art. The FCBA expresses no opinion regarding these issues.

which the Patent and Trademark Office, the public, and the patentee's competitors were entitled to rely. *See, e.g., Sage Prods., Inc. v. Devon Indus., Inc.*, 126 F.3d 1420, 1432 (Fed. Cir. 1997) ("A patentee is not free to retrade or renege on a deal struck with the PTO during patent prosecution."); *Zenith Labs., Inc. v. Bristol-Myers Squibb Co.*, 19 F.3d 1418, 1424 (Fed. Cir. 1994) (stating that patentee may not "obtain, through litigation, coverage of subject matter relinquished during prosecution").

This traditional understanding of prosecution history estoppel was consistent with many other estoppel doctrines. Promissory estoppel, for example, precludes a party from denying the existence of a contract implied by that party's words or actions. *See, e.g., Cohen v. Cowles Media Co.*, 501 U.S. 663, 668-72 (1991); Restatement (Second) of Contracts § 90 (1981). Likewise, judicial estoppel prevents a party to a legal proceeding from asserting a position inconsistent with an earlier position on which the party prevailed or the court relied, if the inconsistency would cause unfairness or prejudice. *See, e.g., New Hampshire v. Maine*, ___ U.S. ___, 121 S. Ct. 1808, 1814-15 (2001). The rationale of these estoppel doctrines and of prosecution history estoppel is the same: in each case, a litigant is precluded from contradicting an earlier position in a way that would be unfair.

The "complete bar" adopted by the Federal Circuit is inconsistent with these traditional conceptions of estoppel. Under the complete bar, the court makes no effort to ascertain what the patentee surrendered during prosecution or whether the patentee's assertion of infringement is inconsistent with that surrender. Instead, the patentee is precluded from asserting any infringement by equivalents as to a claim element added or narrowed by amendment. The "estoppel" is thus unrelated to what the applicant actually surrendered. *See* William M. Atkinson et al., *Was* Festo *Really Necessary?*, 83 J. Pat. & Trademark Off. Soc'y 111,

136 (2001) ("When an amendment is made in the face of prior art, the only thing that is evident is that the parties did not expect that the claim would encompass that prior art as it is characterized in the record. There is no basis to presume that they contemplated that the claims would or would not read on other devices that were not disclosed.").[3]

This result is unfair to the patent holder. As discussed below, a careful analysis of the prosecution history will often show that a surrender of some subject matter during prosecution is consistent with a later assertion of infringement as to other subject matter that was not surrendered. *See infra* Part II.A (explaining how the courts have traditionally ascertained the scope of surrender under the "flexible bar" abrogated by the decision below). Under the complete bar, a court would find an estoppel in these cases, even though the patentee had not surrendered the subject matter in question. While it is entirely fair to estop an actor from contradicting herself, it is unfair to prevent her from taking a position on an issue that is unrelated to her previous representations.[4]

---

[3] Some commentators have suggested other rationales for prosecution history estoppel. For example, Chisum suggests that the doctrine is rooted in the notion of exhaustion of administrative remedies. If a patent applicant agrees with a position taken by the examiner during prosecution, the patentee may not later challenge that same position in the courts. *See* 7A Donald S. Chisum, *Chisum on Patents* § 18.05[1][c], at 18-422 (2000). Under this rationale, it is equally important to ascertain the scope of surrender as precisely as possible, so that the patentee may assert positions that are, in fact, consistent with his statements and actions during prosecution.

[4] At least one district court has already expressed frustration with the complete bar for precisely this reason. *See Control Resources, Inc. v. Delta Elecs., Inc.*, 133 F. Supp. 2d 121, 136, 137 (D. Mass. 2001) (criticizing the "cursory examination of the prosecution history" called for by *Festo* and stating that, although the complete bar mandated an estoppel, a "thorough review of the prosecution history" showed that the patentee "did not abandon the entire range of [equivalents]").

B. The Complete Bar Is Unfair in Its Retroactive Application.

The complete bar adopted by the Federal Circuit represents an abrupt break with precedent. As the majority below recognized, the complete bar conflicts with numerous Federal Circuit decisions dating back to the decision in *Hughes Aircraft Co. v. United States*, 717 F.2d 1351 (Fed. Cir. 1983). *See Festo*, 234 F.3d at 574-75. Thus, the Federal Circuit's adoption of the complete bar conflicts with the principle of *stare decisis*.

This Court has often emphasized the importance of *stare decisis*, noting that, although not an "inexorable command," *Payne v. Tennessee*, 501 U.S. 808, 828 (1991), the doctrine "promotes the evenhanded, predictable, and consistent development of legal principles, fosters reliance on judicial decisions, and contributes to the actual and perceived integrity of the judicial process." *Id.* at 827. One of the principal purposes of the doctrine is to avoid the unfairness inherent in a sudden change in rules on which individuals and businesses have previously relied. *See id.* at 828 ("Considerations in favor of *stare decisis* are at their acme in cases involving property and contract rights, where reliance interests are involved . . . ."). Thus, *stare decisis* is particularly important in the patent context, where individuals and businesses prosecute patent applications and negotiate licenses in reliance on the rules established by the courts to govern the scope of patent protection. Indeed, in *Warner-Jenkinson*, this Court declined to adopt a rule that might have increased certainty at the expense of disturbing the settled expectations of patentees and the Patent and Trademark Office:

> That petitioner's rule might provide a brighter line for determining whether a patentee is estopped under certain circumstances is not a sufficient reason for adopting such a rule. This is especially

> true where, as here, the PTO may have relied upon a flexible rule of estoppel when deciding whether to ask for a change in the first place. To change so substantially the rules of the game now could very well subvert the various balances the PTO sought to strike when issuing the numerous patents which have not yet expired and which would be affected by our decision.

Warner-Jenkinson Co. v. Hilton Davis Chem. Co., 520 U.S. 17, 32 n.6 (1997); *cf. Quill Corp. v. North Dakota*, 504 U.S. 298, 317 (1992) (noting importance of *stare decisis* where prior case law has "engendered substantial reliance and has become part of the basic framework of a sizable industry").

The complete bar adopted by the majority below is contrary to these principles. Every patent now in effect was prosecuted in view of the flexible bar. Over the past two decades, every inventor who amended her patent application, whether to distinguish prior art or for some other reason related to patentability, did so with the understanding that she would still be entitled to a certain range of equivalents when enforcing her patent. As Judge Newman pointed out below, a mere ten to fifteen percent of simple patent applications issue without amendment, and the number of complex patents that are not amended is "vanishingly small." *Festo*, 234 F.3d at 638 n.21 (Newman, J., concurring in part and dissenting in part). Thus, the new complete bar affects the scope of most of what Judge Michel estimated to be 1.2 million unexpired and enforceable patents. *See id.* at 618 (Michel, J., concurring in part and dissenting in part). The decision below has abruptly rewritten the law in a way that unfairly disrupts these reliance interests.

C. The Complete Bar Does Not Promote the "Notice Function" of Patent Claims and May Have Incidental Negative Effects.

The Federal Circuit adopted the complete bar to improve the "notice function" of patent claims — i.e., the role of the claims in specifying exactly what is protected and what is available to the public. *See Festo*, 234 F.3d at 575-76. While this goal is an important one, the complete bar is not a logical or effective way to achieve it. In addition, the complete bar may have incidental negative effects on patent prosecution and litigation.

First, the complete bar discourages claim amendments, one of the public's primary resources for ascertaining the scope of the claimed invention. Prior to the ruling below, the dialogue between applicant and examiner that arose as a result of amendments would create a public record clarifying and defining the invention. Competitors and others could use this record in assessing the scope of protection and, if necessary, in litigating with the patentee. By contrast, if the complete bar is upheld, applicants will have strong incentives to avoid amending the claims altogether, because doing so will lead to complete loss of the doctrine of equivalents. Applicants may draft narrow claims that are likely to be allowed without amendment. Applicants will also be encouraged to seek examiner interviews in the hope of having claims allowed without amendment or argument. As a result, the complete bar may well decrease, rather than increase, the transparency of prosecution history as a whole. *See* Brief of *Amicus Curiae* Federal Circuit Bar Association in Support of Petition for Writ of *Certiorari* at 8-11 (May 9, 2001) [hereinafter "FCBA Petition Brief"].

Second, the complete bar may also discourage inventors — especially small inventors — from applying for patents and may increase the burdens on the Patent and Trademark Office. Under the complete bar, even one piece of prior art

uncovered during prosecution could lead to a claim amendment and complete loss of the doctrine of equivalents. Therefore, the complete bar requires applicants to increase greatly their pre-application prior art searching, a step that could significantly increase cost. Accordingly, the patent system may become unfairly burdensome and expensive for individuals and small businesses. The complete bar may also discourage patent applications altogether, because inventors may decide that preserving their inventions as trade secrets is preferable to disclosing them to the public in exchange for more expensive or weakened patent protection. Further, because of the negative consequences of patent amendments, applicants will have additional incentives to contest rejections by the examiner rather than overcoming them by amendment. Accordingly, the complete bar may also increase the burdens on the PTO and, ultimately, the Federal Circuit. *See* FCBA Petition Brief at 12-13, 16-17.

Third, the unpredictability that the Federal Circuit sought to eliminate with the complete bar is inherent in the doctrine of equivalents itself. The Federal Circuit argued that, under a flexible approach in which some equivalents are deemed surrendered by an amendment and others are not, it is "virtually impossible to predict before the decision on appeal where the line of surrender is drawn." *Festo*, 234 F.3d at 575. In fact, drawing the "line of surrender" is not any more difficult or less predictable than ascertaining the scope of equivalents under the doctrine of equivalents in the first place. The same considerations enter into both determinations. *Compare Graver Tank & Mfg. Co. v. Linde Air Prods. Co.*, 339 U.S. 605, 609 (1950) ("What constitutes equivalency must be determined against the context of the patent, the prior art, and the particular circumstances of the case.") *with infra* Part II.A (discussing the similar evidence and analytical methods on which courts have traditionally

relied in applying the flexible bar).[5] Thus, the Federal Circuit's reasoning, if followed to its logical conclusion, would require the abrogation of the doctrine of equivalents altogether. This result, of course, is fundamentally at odds with this Court's long line of precedents culminating in *Warner-Jenkinson*, which reaffirmed the doctrine.

II. THE FLEXIBLE BAR HAS BEEN AND CAN BE RATIONALLY AND CONSISTENTLY APPLIED.

The Federal Circuit abrogated the longstanding flexible bar approach to prosecution history estoppel because it concluded that this approach had become "unworkable." *Festo*, 234 F.3d at 575. The Federal Circuit also concluded that there was a conflict between two lines of Federal Circuit cases applying the doctrine of prosecution history estoppel. *See id.* at 572-74. The FCBA respectfully disagrees with these conclusions. While the flexible bar has not always been applied with ideal clarity or consistency, the solution to this problem is to improve the application of the doctrine, not to abandon decades of precedent in favor of an entirely new rule that is likely to have unintended negative consequences. As discussed below, the flexible bar can be applied in a way that, while faithful to the purposes of the doctrine as developed by this Court and other courts, also addresses the concerns raised by the Federal Circuit below and by this Court in *Warner-Jenkinson*.

A. Several Basic Principles Have Long Guided the Application of the Flexible Bar.

In the decision below, the Federal Circuit suggested that no meaningful principles had guided or could guide the application of the flexible bar in prosecution history estoppel

[5] Nor is the problem of ascertaining the scope of available equivalents any more difficult or less predictable than claim construction. In both cases, the court must examine the claims, the specification, and the prosecution history and determine the scope of patent protection.

cases. The court stated that the plaintiff invariably argues for a broad scope of equivalents, the defendant for a narrow scope, and the court must draw an arbitrary line somewhere between these extremes. *See Festo*, 234 F.3d at 574-75, 577. These suggestions are an oversimplification. In fact, the flexible bar consists of several interrelated principles that are fair and rational and can be consistently applied. As shown below, this Court and other courts have long used, and should continue to use, these principles to determine what the applicant surrendered through a narrowing amendment.[6]

1. The Asserted Scope of Equivalents Must Be Consistent with Arguments Made to the Patent and Trademark Office.

The first principle underlying the flexible bar is fundamental to the concept of estoppel: the scope of protection sought by the patentee must be consistent with any arguments made to the Patent and Trademark Office to obtain the patent. For example, if the applicant specifically identified certain features as contributing to the patentability of the invention, those features must be present in the accused product. In *Hubbell v. United States*, 179 U.S. 77 (1900), for example, the patent claimed an improvement in rifle cartridges. During the prosecution history, the patentee explained that the "distinguishing feature" of his invention was that "the fulminate . . . is compelled to diffuse its explosive force, *not in a central stream*, but in a diffused

[6] While the majority below asserted that the decisions of this Court regarding prosecution history estoppel do not "fully address[] the range of equivalents that is available once prosecution history estoppel applies" and that the Federal Circuit must "independently decide the issue," *Festo*, 234 F.3d at 571, this assertion is not entirely correct. As shown below, this Court has consistently decided questions of prosecution history estoppel by carefully considering the prosecution history. Under the Federal Circuit's complete bar, the courts must abandon this careful factual analysis. Thus, the complete bar is inconsistent with this Court's prior decisions.

body into the base of the powder charge." *Id.* at 80 (emphasis added). This Court held that the patentee's argument precluded the patentee from asserting infringement as to a device in which the explosive force entered in a central stream. *See id.* at 85-86.

Another case illustrating this principle is *Senmed, Inc. v. Richard-Allan Medical Industries, Inc.*, 888 F.2d 815 (Fed. Cir. 1989), *overruled on other grounds by Cardinal Chemical Co. v. Martin International, Inc.*, 508 U.S. 83 (1993). The patent at issue in *Senmed* claimed an improvement in a surgical skin stapler. As originally drafted, the relevant claim required means for moving a row of staples "toward" the surface of the "anvil," about which the staples were formed as they were fired. *Id.* at 820. The examiner rejected the claim in light of prior art disclosing means for moving the forwardmost staple to a position above the anvil surface, after which the "staple driver" (another component of the stapler) moved it onto the anvil surface and formed it. In response, the applicant amended the claim to require means for placing "a forwardmost staple of said row *on* said anvil surface." *Id.* (emphasis added). The applicant argued that this amendment distinguished the prior art because, in the invention as claimed, the staple driver "need only form the staple about the anvil surface, *the driver not having to shift the staple to the anvil surface*." *Id.* (emphasis added). In light of this argument, the court held that the patentee was estopped from asserting infringement by equivalents as to a stapler in which the staple driver did shift the staple to the anvil surface. *See id.*; *see also, e.g., Desper Prods., Inc. v. QSound Labs, Inc.*, 157 F.3d 1325, 1338-40 (Fed. Cir. 1998) (patentee was bound by arguments made during prosecution history even if prior art might have been distinguished on different ground); *Wang Labs., Inc. v. Toshiba Corp.*, 993 F.2d 858, 867-68 (Fed. Cir. 1993) (in patent claiming memory module, protection limited to single-row construction emphasized in argument to

examiner, even if dual-row construction might have been patentable); *Environmental Instruments, Inc. v. Sutron Corp.*, 877 F.2d 1561, 1565-66 (Fed. Cir. 1989) (applicant limited to literal scope of "figure eight in cross section" language in amendment where patentee had emphasized this specific feature in argument to examiner), *overruled on other grounds by Cardinal Chem. Co. v. Martin Int'l, Inc.*, 508 U.S. 83 (1993).

2. The Asserted Scope of Equivalents Must Not Capture the Prior Art.

Under the flexible bar as traditionally applied, the patentee is estopped from asserting that features present in the prior art are equivalent to elements of the claimed invention. For example, in *Phoenix Casier Co. v. Spiegel*, 133 U.S. 360 (1890), the patent at issue claimed "a two-wheeled caster in which the axis of the floor-wheels could oscillate relatively to the furniture leg." *Id.* at 367. During prosecution, however, it became apparent that the applicant was not the first inventor of this type of caster. Therefore, the applicant narrowed his claims to describe more specifically the elements of his invention, one of which was a "rocker-formed collar bearing or its mechanical equivalent." *Id.* at 367-69. Despite the explicit reference to equivalents in the claim, this Court held that the scope of protection could not be construed as broadly as the patentee urged:

> In view of the state of the art, as shown by the various patents put in evidence, the words "the rocker-formed collar-bearing or its mechanical equivalent," in the claim of the Martin patent, *cannot embrace all modes of affording vertical support between the floor-wheel housing and the furniture plate, whereby lateral oscillation of such housing is permitted*; and those words must be restricted to such a bearing resting on a collar

> beneath the floor-wheel housing, as is shown in the Martin patent.

Id. at 368-69 (emphasis added). In other words, this Court ruled that, if the scope of protection were drawn as broadly as advanced by the patentee, the patent would improperly capture the prior art. Because the accused device lacked a "rocker-formed collar bearing," there was no infringement. *See id.* at 369.

In *Laitram Corp. v. Morehouse Industries, Inc.*, 143 F.3d 1456 (Fed. Cir. 1998), the Federal Circuit similarly found an estoppel in light of the prior art cited and distinguished during prosecution. The patent in that case claimed "modules," or links, of a conveyor belt chain. One disputed issue concerned the shape of the "driving surface," or area of engagement between the chain and the driving wheel of the conveyor. The district court held, and the appeals court agreed, that the claim literally required "angled" and "planar" driving surfaces. The court based this claim construction in part on art distinguished by the applicant during prosecution that described driving surfaces that were cylindrical in shape. Under this claim construction, there was no literal infringement, because the driving surfaces of the accused module were curved. *See id.* at 1458-63.

The appeals court agreed with the district court's further conclusion that the patentee was estopped from asserting infringement under the doctrine of equivalents as to the curved driving surfaces. The court noted that the defendant's curved surfaces were "only trivial variants" of the cylindrical surfaces in the prior art that the applicant had distinguished. *See id.* at 1464. Thus, as in *Phoenix Caster*, the court found an estoppel because the scope of patent protection sought by the patentee was so broad that it would have encompassed the prior art. *See id.*; *see also, e.g., Keystone Driller Co. v. Northwest Eng'g Corp.*, 294 U.S. 42, 48 (1935) (if claims were read as broadly as patentee urged,

they would describe devices in the prior art); *Merck & Co. v. Mylan Pharms., Inc.*, 190 F.3d 1335, 1341-42 (Fed. Cir. 1999) (no infringement by equivalents as to type of polymer described in prior art); *Litton Sys., Inc. v. Honeywell, Inc.*, 140 F.3d 1449, 1462-63 (Fed. Cir. 1998) (no infringement by equivalents as to type of ion beam source described in prior art).

3. The Asserted Scope of Protection Must Be Narrower Than What the Patentee Claimed Before the Amendment.

Courts have also consistently found an estoppel where the scope of protection asserted by the patentee under the doctrine of equivalents is indistinguishable from what the patentee had claimed prior to the amendment. *See, e.g., Royer v. Coupe*, 146 U.S. 524, 532 (1892) ("[A] patentee cannot successfully contend that his patent shall be construed as if it still contained the claims which were . . . rejected and withdrawn."); *Mannesmann Demag Corp. v. Engineered Metal Prods. Co.*, 793 F.2d 1279, 1284 (Fed. Cir. 1986) (noting that patentee is "not entitled to the original scope of its unamended claims").

This Court applied this principle in *Exhibit Supply Co. v. Ace Patents Corp.*, 315 U.S. 126 (1942), a case discussed by the *en banc* majority below. The patent at issue in *Exhibit Supply* claimed a target that closed an electrical switch when struck by a ball on a pinball table. *See id.* at 128. As originally drafted, the claim required that "conductor means" providing the switch contact be "carried by" the table. During prosecution, the patentee overcame a prior art rejection by changing the language "carried by" to "embedded in," which this Court construed to mean "solidly set or firmly fixed in the table." *Id.* at 132-33, 135. In light of the amendment, the patentee was estopped from asserting infringement as to conductor means not "embedded in" the table, even if such means were arguably equivalent. *See id.*

at 136-37. This result follows directly from the principle set forth above: if the Court had agreed with the patentee and relaxed the requirement that the conductor means be "solidly set or firmly fixed in the table," the scope of equivalents would have been no narrower than the scope of the claim before the amendment. Certainly the patentee did not attempt to articulate any scope that was broader than "embedded in" yet narrower than "carried by." *See id.* at 136 ("[I]t has long been settled that recourse may not be had to [the doctrine of equivalents] to recapture claims which the patentee has surrendered by amendment.").

Similarly, in *Mannesmann*, the patentee was estopped from arguing that pipes separated by a tolerance of 1/16" to 1/32" infringed patent claims requiring that the pipes be "in a contacting relation." The claim language had originally required only that the pipes be "closely adjacent," and the amendment was made to distinguish prior art. *See Mannesmann*, 793 F.2d at 1285 ("[T]he enlarged claim interpretation that Mannesmann seeks to apply to the [defendant's] structure falls squarely within the claim scope that Mannesmann relinquished to overcome the cited references."); *see also Royer*, 146 U.S. at 531-32 (patentee was limited to specific steps of claimed process and could not receive broader scope of protection that he had initially sought but had relinquished during prosecution).

4. If the Above Criteria Are Met, There Is No Estoppel.

Significantly — and in stark contrast to the "complete bar" adopted by the *en banc* majority below — there is no estoppel under the flexible bar if it is possible to articulate a scope of equivalents that captures the accused method or device, is consistent with arguments made to the Patent and Trademark Office, does not capture the prior art, and is identifiably narrower than the scope of the pre-amendment claim. A leading example of these principles is *Hughes*

Aircraft Co. v. United States, 717 F.2d 1351 (Fed. Cir. 1983).

In *Hughes*, the patent in suit claimed a "spin-stabilized" satellite capable of maintaining its position above the earth. *See id.* at 1352. During prosecution, the applicant, Williams, had added limitations to the claims to distinguish prior art, including a patent issued to McLean. *See id.* at 1355. One such added limitation was that certain information be transmitted to the ground for use in calculating the position of the satellite. There was no literal infringement of this element because the accused device — which took advantage of later technological improvements — used on-board computers to perform the calculations. *See id.* at 1360-61, 1365.

Nevertheless, the Federal Circuit held that there was no estoppel. The court noted that the McLean patent disclosed a target-seeking space vehicle (missile) that, like the Williams invention, was spin-stabilized and used a pulsed jet. Hence, the plaintiff would have been estopped from "obtaining a claim interpretation so broad as to encompass the McLean structure, or to encompass all structures in which a pulsed jet is used to precess the spin axis of a spin-stabilized body." *Id.* at 1354-56, 1362. However, the McLean patent did *not*, as Williams did, disclose a fixed external coordinate system for controlling the position of the satellite with respect to the earth and the sun. Further, Williams had specifically referred to this feature of his invention in distinguishing McLean. *See id.* at 1355-56. In addition, the Williams invention was controllable from the ground, and the McLean device was not. *See id.* at 1363. Thus, the distinguishing features of the invention (a fixed external coordinate system and ground control) could be defined more broadly than the literal claims, but still consistently with the prosecution history, and were present in the accused device. *See id.* at 1362 ("Williams did not, of course, surrender subject matter

related to employment of an on-board computer to accomplish in a differently timed manner what is accomplished by his disclosed structure.").

Another example of this principle is *Insituform Technologies, Inc. v. Cat Contracting, Inc.*, 99 F.3d 1098 (Fed. Cir. 1996). The patent in that case claimed a method for impregnating a flexible sealing tube with resin so that the tube could be used to seal an underground pipe without excavating it. *See id.* at 1101-02. As originally drafted, the claims read on the Everson patent, which disclosed the use of a single vacuum at one end of the tube for drawing the resin through the tube. The applicant amended the claims to require that the vacuum cup be used at successive points along the tube through windows cut in the tube; when the resin was drawn up to a particular window, that window would be sealed and the vacuum placed at the next window. The applicant explained that this method was an improvement on the Everson method, which would require a very powerful vacuum for long tubes. *See id.* at 1103-04.

The defendant, Inliner, used two methods that were accused of infringing. In the first, multiple vacuum cups simultaneously created a vacuum through multiple windows in the tube. In another, the multiple cups were replaced by multiple "needles," or metal tubes, inserted into the sealing tube. *See id.* at 1104-05. Inliner argued that, in light of the amendment and arguments during the prosecution history, Insituform was estopped from asserting that the multiple cups and multiple needles were equivalent to the single cup claimed in the patent. The Federal Circuit disagreed. It noted that, while certain statements to the Patent and Trademark Office indicated that the applicant envisioned a single cup, the applicant was clearly pointing to the ability to use a less powerful vacuum as the distinguishing feature of the invention, and the defendant's processes possessed this advantage as well. *See id.* at 1108-09. Thus, as in *Hughes*,

there was no estoppel because the asserted patent protection was consistent with the way the applicant had distinguished the prior art. *See also, e.g., Hurlbut v. Schillinger*, 130 U.S. 456, 465 (1889) (this Court refused to interpret a narrowing disclaimer so as to limit protection to the literal requirements of the claims); *Black & Decker, Inc. v. Hoover Serv. Ctr.*, 886 F.2d 1285, 1294-95 (Fed. Cir. 1989) (no estoppel where, although accused vacuum cleaner lacked "snout" protecting motor housing, and snout was added during prosecution history to distinguish prior art, motor housing in accused product was configured to perform same function as snout, and cited prior art lacked this function); *Great Northern Corp. v. Davis Core & Pad Co.*, 782 F.2d 159, 166 (Fed. Cir. 1986) (in patent claiming packaging material with "recesses," or holes in material for improving flexibility, there was no "surrender of all but the literal location of the recesses recited" where prior art did not disclose any recesses at all).

B. There Was No Genuine Conflict in the Prior Case Law Applying the Flexible Bar.

The *en banc* majority below pointed to a supposed conflict in prior case law as a reason to abrogate the flexible bar. According to the majority, while most of the pre-*Festo* cases had adopted a flexible approach to estoppel, there were actually two lines of authority — one applying the flexible bar as enunciated in *Hughes*, and the other adopting a "strict approach" inconsistent with the flexible bar. The court cited *Kinzenbaw v. Deere & Co.*, 741 F.2d 383 (Fed. Cir. 1984), and *Prodyne Enterprises, Inc. v. Julie Pomerantz, Inc.*, 743 F.2d 1581 (Fed. Cir. 1984), as applying the "strict approach." *See Festo*, 234 F.3d at 572-74. In fact, however, *Kinzenbaw* and *Prodyne* are consistent with *Hughes* and traditional prosecution history estoppel principles and do not support the Federal Circuit's new complete bar.

In *Kinzenbaw*, the patent in suit claimed a planter, a piece of farming equipment that cuts a furrow and plants seeds. The claimed planter had a pair of discs for cutting the furrow and a pair of gauge wheels "in face contact with" the outer surfaces of the discs. The wheels regulated the depth of the furrow and scraped dirt off the discs. As originally filed, the claim at issue contained the limitation — which we may call limitation (1) — that the gauge wheels must extend beyond the rear edges of the discs. The examiner rejected the claim in light of prior art disclosing adjustable wheels, on the ground that it would have been obvious to move the wheels into the position claimed by the applicant. *See Kinzenbaw*, 741 F.2d at 388.

In response, the applicant amended his claim by striking limitation (1) and replacing it with two limitations: (1') that the radius of the wheels (which we may call *r*) must exceed the distance (*d*) from the axis (i.e., center) of the wheels to the rear edges of the discs; and (2) that the radius of the wheels must be smaller than the radius of the discs. The examiner allowed the amended claim. *See id.* A modified drawing from the patent showing the discs (20) and wheels (22), as well as the radius of the wheels *r* and the distance from the center of the wheels to the rear edges of the discs *d*, is reproduced below.

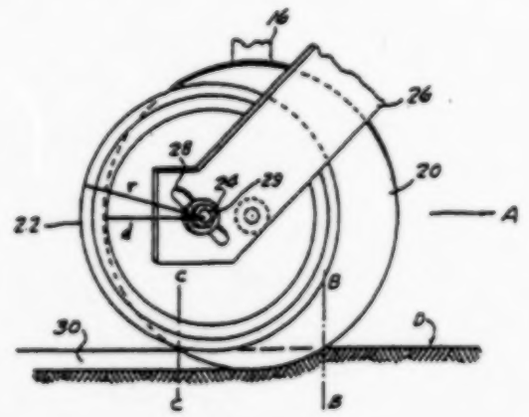

In the defendant's device, the radius of the wheels exceeded the radius of the discs. The defendant's device therefore avoided limitation (2), and there was no literal infringement, although the device apparently met all other claim limitations. The plaintiff argued that the size of the gauge wheels was irrelevant, and that the defendant's device infringed by equivalents. The district court held, and the Federal Circuit panel agreed, that the applicant had "intentionally narrowed his claims in order to avoid the examiner's rejection," and the patentee was estopped to assert the equivalence of the device without limitation (2). *See id.*

This holding is fully consistent with the flexible bar as applied in *Hughes*. Indeed, *Kinzenbaw* is an easy case for finding an estoppel, because the stricken limitation (1) appears to be *exactly identical in scope* to the added limitation (1'). Because the wheels and discs must be in face contact, one can see that the wheels will extend beyond the edges of the discs to the rear (limitation (1)) if and only if *r* exceeds *d* (limitation (1')). Relaxing limitation (2) in the amended claim, as the plaintiff urged, would leave only limitation (1') — the scope of which is precisely the same as the scope of limitation (1) in the rejected claim. Accordingly, the estoppel in *Kinzenbaw* follows directly from the longstanding rule that a patentee may not argue for a construction of the patent that completely ignores a narrowing limitation. *See supra* Part II.A.3.

The language in *Kinzenbaw* quoted by the *Festo* majority and some commentators[7] as supporting a "strict" approach to prosecution history estoppel was the court's response to the

[7] *See, e.g.*, 5A Donald S. Chisum, *Chisum on Patents* § 18.05[3][b][i], at 18-496 to 18-497 (2000); Note, *To Bar or Not To Bar: Prosecution History Estoppel after* Warner-Jenkinson, 111 Harv. L. Rev. 2330, 2335-36 (1998). The FCBA disagrees with the analysis advanced by these commentators.

patentee's argument that the radius limitation was "unnecessary" to distinguish the prior art. *See Kinzenbaw*, 741 F.2d at 389. Rejecting this argument, the court stated that it would not "undertake the speculative inquiry whether, if [the applicant] had made only [limitation (1')] in his claim, the examiner nevertheless would have allowed it." *Id.* While the precise meaning of this language is unclear, the court may have been invoking the rule that, while the patentee may argue about the scope of the disclaimer made through the amendment, he may not retract a surrender once made. *See Warner-Jenkinson*, 520 U.S. at 33 n.7 ("We do not suggest that, where a change is made to overcome an objection based on the prior art, a court is free to review the correctness of that objection when deciding whether to apply prosecution history estoppel."). Under this rule, the patentee was estopped from reclaiming the full scope of what the applicant had originally sought, even if the narrowing amendment was unnecessary to distinguish the prior art. In any event, nothing in *Kinzenbaw* suggests a "complete bar" that arises whenever an amendment is "narrowing," without regard to the specific facts of the case.[8]

Prodyne can be analyzed similarly. In a patent claiming a food cutting device, the relevant claim required that the wire cutting element be "looped around" part of a U-shaped bar. During the prosecution history, the patentee overcame a prior art rejection by substituting the phrase "looped around" for the phrase "attached to" in the claim as originally drafted. The defendant's device avoided literal infringement because its wire was attached through a slot and held in place by a knot, rather than being "looped around" the U-shaped bar as

[8] Indeed, the court noted, as a basis for its holding, that the patent was an "improvement patent[] in a crowded art." *Kinzenbaw*, 741 F.2d at 389. To interpret *Kinzenbaw* as standing for a "complete bar" depending only on whether the amendment was "narrowing," one must ignore this aspect of the decision.

claimed. *See Prodyne*, 743 F.2d at 1582-83. The plaintiff in *Prodyne* did not even attempt to argue for a scope of equivalents of "looped around" that would embrace the accused device but would be narrower than "attached to" — the full scope of what was originally claimed. Instead, the patentee argued, like the plaintiff in *Kinzenbaw*, that the added limitation was "unnecessary." Unsurprisingly, the court declined to inquire as to whether the limitation was truly necessary; instead, it found an estoppel. *See id.* at 1583. Again, this result is mandated by the rule that a patentee may not completely avoid limitations it added in order to obtain allowance of the claims. Thus, the result in *Prodyne*, as in *Kinzenbaw*, is entirely consistent with *Hughes* and with the other decisions applying a flexible approach to prosecution history estoppel.[9]

C. The Flexible Bar Can Be Most Consistently Applied by Placing the Burden on the Patentee to Demonstrate a Scope of Protection Consistent with the Prosecution History.

The flexible bar should be applied in the future as it has in the past, with the clarification that the patentee should bear the burden of demonstrating a scope of equivalents consistent with both the prosecution history and the relief it seeks. Under this approach, the flexible bar should be applied as a rebuttable presumption similar to the presumption established by this Court in *Warner-Jenkinson* for the question whether "a substantial reason related to patentability" motivated the amendment. *Warner-Jenkinson*, 520 U.S. at 33. Whenever a claim has been subject to a narrowing amendment, an estoppel should be presumed as to infringement by equivalents of the limitation or limitations added in the amendment. The patentee may rebut this

[9] As Judge Michel pointed out below, both *Kinzenbaw* and *Prodyne* cite and follow *Hughes*. *See Festo*, 234 F.3d at 610 (Michel, J., concurring in part and dissenting in part).

presumption either by showing that the amendment was not for "a substantial reason related to patentability" or by articulating a scope of equivalents that both captures the accused product and is consistent with the prosecution history. The patentee should be required to articulate what the patentee regards as the scope of protection granted by the patent, but instead of being limited by the literal language of the claims, such scope would be limited by the principles discussed in Part II.A, *supra*.

This application of the flexible bar follows logically from this Court's decision in *Warner-Jenkinson*. There, this Court stated:

> Mindful that claims do indeed serve both a definitional and a notice function, we think the better rule is to place the burden on the patent holder to establish the reason for an amendment required during patent prosecution. The court then would decide whether that reason is sufficient to overcome prosecution history estoppel as a bar to application of the doctrine of equivalents to the element added by that amendment. Where no explanation is established, however, the court should presume that the patent applicant had a substantial reason related to patentability for including the limiting element added by amendment. In those circumstances, prosecution history estoppel would bar the application of the doctrine of equivalents as to that element.

Warner-Jenkinson, 520 U.S. at 33. The proposed rule, which applies a similar presumption in a slightly broader context, is consistent with this reasoning. In the language quoted above, the phrase "reason for an amendment" refers to whether the amendment was "substantial" and "related to patentability" — i.e., *why* the patentee disclaimed subject matter through an amendment. The proposed rule extends

the presumption to include the question of *what* was disclaimed. If the patentee can establish that the accused subject matter was not disclaimed, then infringement by equivalents is possible. Otherwise, an estoppel should be presumed.

Extending the *Warner-Jenkinson* presumption in this manner would both preserve the definitional and notice functions of patent claims and ensure that prosecution history estoppel is rationally and consistently applied. It will not always be possible to ascertain the exact contours of what was surrendered through an amendment or argument. In doubtful cases, the rule gives the benefit of that doubt to the public. By placing the burden on the patentee, the rule also gives proper effect to the statements in the decisions of this Court that claim amendments are to be strictly construed. *See, e.g., Hubbell*, 179 U.S. at 83-84 ("[L]imitations imposed by the inventor, especially such as were introduced into an application after it had been persistently rejected, must be strictly construed against the inventor and in favor of the public, and looked upon as in the nature of disclaimers."). At the same time, the rule preserves a range of equivalents in cases where a line between what has and has not been surrendered can be reliably drawn. Thus, the rule reflects the basic principle — overlooked by the Federal Circuit's complete bar — that the scope of estoppel should be related to the actions creating it. The proposed rule should also encourage fuller explanation during prosecution by applicants who wish to avoid unfavorable presumptions in later litigation. By contrast, the complete bar, if upheld, is likely to encourage "stealth" prosecution by applicants wishing to avoid amendment altogether. *See supra* Part I.C.

The proposed rule also addresses the concerns raised in the majority decision below. For example, the court imagined that a value of "less than twenty" in a patent claim

is amended to "less than five" in light of prior art disclosing a value of fifteen. The court then asked how it would be possible to draw a line between the value claimed (five) and the value disclosed in the prior art (fifteen). *See Festo*, 234 F.3d at 577. The proposed application of the flexible bar provides an answer to this question. Suppose, for example, that the value referred to the relative amount of a certain material in a chemical composition, and that the results taught in the patent could be achieved by using values up to six, perhaps in conjunction with slight deviations from the preferred embodiment of the patent in other respects. Suppose further that, beyond values of six, the properties of the composition changed in a way that made it behave less like the patented invention and more like the prior art disclosing "less than fifteen." In this case, the line could be drawn at six. If there were no such way to draw a line, however, no scope of equivalents would be available.[10] As this example shows, it is possible to apply the flexible bar rationally, and this Court should reinstate it.

[10] The Federal Circuit's hypothetical is based on the facts of *Warner-Jenkinson*, where the numbers described the pH of a certain process. *See Festo*, 234 F.3d at 577 n.2. In *Warner-Jenkinson*, there was evidence that certain pH values would be avoided for a functional reason (they caused "foaming" problems). *See Warner-Jenkinson*, 520 U.S. at 1046 n.2.

CONCLUSION

For the foregoing reasons, *amicus curiae* Federal Circuit Bar Association respectfully requests that this Court reverse the *en banc* decision of the Federal Circuit and remand for an application of the flexible bar according to the principles set forth above.

Respectfully submitted,

GEORGE E. HUTCHINSON
EXECUTIVE DIRECTOR,
FEDERAL CIRCUIT
BAR ASSOCIATION
1300 I Street, N.W.
Suite 700
Washington, D.C. 20005
(202) 408-4000

CLAIRE LAPORTE
(Counsel of Record)
MITCHELL J. MATORIN
ROBERT L. BOCCHINO JR.
MEGAN H. MACK
MARK A. REILLY
FOLEY, HOAG & ELIOT LLP
One Post Office Square
Boston, MA 02109
(617) 832-1000
Counsel for Amicus Curiae
The Federal Circuit Bar
Association

Dated: August 31, 2001

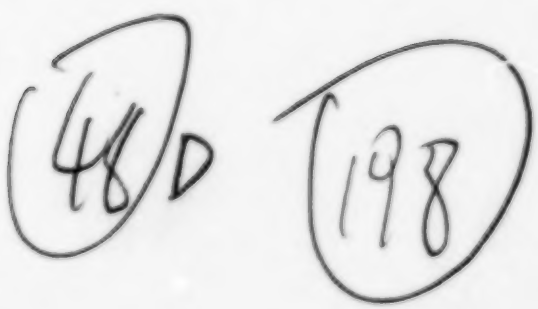

(39)

Supreme Court, U.S.
FILED
AUG 31 2001
CLERK

No. 00-1543

In the Supreme Court of the United States

FESTO CORPORATION,
Petitioner,

v.

SHOKETSU KINZOKU KOGYO KABUSHIKI CO., LTD., et al.
Respondents.

ON WRIT OF CERTIORARI TO THE UNITED STATES COURT OF APPEALS FOR THE FEDERAL CIRCUIT

BRIEF OF *AMICUS CURIAE* AMERICAN INTELLECTUAL PROPERTY LAW ASSOCIATION IN SUPPORT OF PETITIONER

M. ANDREA RYAN
President
AMERICAN INTELLECTUAL PROPERTY LAW ASSOCIATION
2001 Jefferson Davis Hwy.
Arlington, Virginia 22202
(703) 415-0780

LAWRENCE M. SUNG
COUNSEL OF RECORD
Assistant Professor
UNIVERSITY OF MARYLAND SCHOOL OF LAW
515 West Lombard Street
Baltimore, Maryland 21201
(410) 706-1052

JANICE M. MUELLER
Associate Professor
JOHN MARSHALL LAW SCHOOL
315 S. Plymouth Court
Chicago, Illinois 60604
(312) 427-2737

30 pp

TABLE OF CONTENTS

TABLE OF CONTENTS i

TABLE OF AUTHORITIES iv

STATEMENT OF INTEREST 1

CONSENT TO FILING OF *AMICUS CURIAE* BRIEF 2

SUMMARY OF THE ARGUMENT 2

ARGUMENT 3

I. The Complete Bar Established by the Federal Circuit in *Festo* Contravenes This Court's Doctrine of Equivalents Jurisprudence. 3

a. The touchstone of prosecution history estoppel should be a clear and unmistakable surrender of otherwise patentable subject matter 5

b. The Federal Circuit overreached by creating an absolute standard under *Festo* that imposes a prosecution history estoppel even where a patent applicant has shown no clear and unmistakable surrender of otherwise patentable subject matter. 10

c. Because it applies regardless of whether or not a clear and unmistakable surrender of otherwise patentable subject matter has occurred, the complete bar discourages patent applicants from clarifying the language of their claims and thwarts a better public understanding of the true reach of the exclusive rights surrounding these inventions. 12

II. The *Festo* Complete Bar Has Met With Criticism From Members of the Judiciary, the USPTO, the Legal Academy, and the Business Community. 13

a. Trial courts have criticized the *Festo* complete bar and have struggled with the application of this inflexible standard. 13

b. The USPTO has recognized the problems the agency will face from the likely changes in patent prosecution practice that the complete bar rule militates. 14

c. The legal academy and business community have criticized the complete bar as upsetting the previously fair balance between the scope of exclusive rights granted to a patentee, given the inherent shortcoming in describing technology through words, and thereliable notice of one's freedom to operate in a patented landscape. 15

III. The Retroactive Application of the *Festo* Complete Bar Leads to the Unjust Results Against Which This Court Warned in *Warner-Jenkinson*. 18

a. Because it rejects the requirement of a clear and unmistakable surrender of otherwise patentable subject matter, the *Festo* complete bar particularly harms owners of extant patents by foreclosing the saving procedure this Court provided in *Warner-Jenkinson*. 19

b. The *Festo* complete bar greatly undermines the public reliance on all extant patents by clearing a path for even unscrupulous copyists to avoid infringement liability, which is the very ill the doctrine of equivalents was designed to remedy. 20

CONCLUSION 21

TABLE OF AUTHORITIES

Page(s)

CASES

Aclara Biosciences, Inc. v. Caliper Technologies Corp.,
125 F. Supp. 2d 391 (N.D. Cal. 2000) 14

Control Resources, Inc. v. Delta Electronics, Inc.,
133 F. Supp. 2d 121 (D. Mass. 2001) 14

Creo Products Inc. v. Presstek,
No. 99-525-GMS, 2001 WL 637397
(D. Del. May 11, 2001) 13

Dow Chemical Co. v. Sumitomo Chemical Co.,
No. 00-1441, 2001 U.S. App. LEXIS 16716
(Fed. Cir. July 27, 2001) 6, 8

Festo Corp. v. Shoketsu Kinzoku Kogyo Kabushiki Co.,
234 F.3d 558 (Fed. Cir. 2000), *cert. granted*,
121 S. Ct. 2519 (U.S. June 18, 2001)
(No. 00-1543) ..... *passim*

*Graver Tank & Manufacturing Co. v. Linde Air
Products Co.*, 339 U.S. 605 (1950) 12

Markman v. Westview Instruments, Inc.,
517 U.S. 370 (1996) 10

*Pharmacia & Upjohn Co. v. Mylan
Pharmaceuticals, Inc.*,
170 F.3d 1373 (Fed. Cir. 1999) 6, 8

Sextant Avionique, S.A. v. Analog Devices, Inc.,
172 F.3d 817 (Fed. Cir. 1999) 6

TM Patents, L.L.P. v. IBM,
136 F. Supp. 2d 209 (S.D.N.Y. 2001) 14

Warner-Jenkinson Co. v. Hilton Davis Chemical Co.,
520 U.S. 17 (1997) ..... *passim*

Winans v. Denmead,
56 U.S. 330 (1853) 5

OTHER AUTHORITIES

William M. Atkinson *et al.*, *Was Festo Really
Necessary?*, 83 J. PAT. & TRADEMARK OFF.
SOC'Y 111 (2001) 16

Peter J. Ayers, *Federal Circuit's Festo is Unfriendly
Toward Patent Rights*, 163 N.J.L.J. 29 (2001) 20

Lisa M. Bowman, *Court Case Spurs Copycat
Concerns*, NEWS.COM (Feb. 28, 2001) 16

Jennifer Couzin & Keith Perine, *Gene Schemes: The
Race to Patent The Human Genome Is On. Can The
Patent Office Keep Up?*, INDUSTRY STAND.,
July 23, 2001 16-17

*Festo Decision is Condemned at Meetings of ABA and
AIPLA*, 61 PAT. TRADEMARK & COPYRIGHT J.
(BNA) 414 (2001) 16

Linda Greenhouse, *Supreme Court to Review Case That Redefined Patent Doctrine*, N.Y. TIMES, June 19, 2001 15

John Hanchette, *Patent Office Hard Pressed as Congress and White House Divert Funds*, GANNETT NEWS SERV., July 12, 2001 15

Joseph N. Hosteny, *Does Festo Change Patent Prosecution?*, INTELLECT. PROP TODAY, May 2001 11

William James, *Ensuring Broad Claim Coverage after Festo*, 18 COMPUTER & INTERNET LAWYER 13 (2001) 13

Steven E. Koffs, *What's Left of the Doctrine of Equivalents?*, 224 LEGAL INTELLIGENCER 5 (2001) 16

Patrick Neighly, *Weighted Scales of Justice? Two Recent IP Laws Favor the Big Guy*, AM.'S NETWORK, Feb. 1, 2001 17

Frederick A. Spaeth, *"Equivalents Thereof" v. The Doctrine of Equivalents in the Interpretation of U.S. Patent Claims*, 20 QUINNIPIAC L. REV. 487 (2001) 16

James Toupin & John Whealan, *Effects of Festo Decision on USPTO Operations* (Feb. 28, 2001) ... 14, 15

U.S. Patent Law Strikes a Blow, ELECS. TIMES, Feb. 19, 2001 17

Kevin A. Wolff *et al.*, *The Unspoken Loss In Shareholder Value: Patent Rights Take A Hit*, 9 MEALEY'S LITIG. REP.: INTELLECT. PROP. 41 (2001) 17

BRIEF OF *AMICUS CURIAE* AMERICAN INTELLECTUAL PROPERTY LAW ASSOCIATION IN SUPPORT OF PETITIONER

STATEMENT OF INTEREST[1]

The American Intellectual Property Law Association ("AIPLA") is a national association of more than 13,000 members, primarily attorneys engaged in representing intellectual property owners. The interests and practices of AIPLA members lie in the areas of patent, copyright, trademark, trade secret and other intellectual property law. Members of AIPLA are employed by private law firms, corporations, universities, research institutions, and government, and are engaged in the creation, licensing and transfer, and enforcement of intellectual property rights. Unlike many other areas of legal practice in which separate and distinct plaintiffs' and defendants' bars exist, most intellectual property attorneys represent both intellectual property owners and alleged infringers.

The AIPLA has no stake in either of the parties to this appeal or in the outcome of the appeal, other than its interest in seeking correct and consistent interpretation of the law affecting intellectual property.

---

[1] In accordance with Supreme Court Rule 37.6, *amicus curiae* states that this brief was not authored, in whole or in part, by counsel to a party, and that no monetary contribution to the preparation or submission of this brief was made by any person or entity other than the *amicus curiae* or its counsel.

CONSENT TO FILING OF *AMICUS CURIAE* BRIEF

In accordance with Supreme Court Rule 37.3(a), the AIPLA has obtained written consent to the filing of this *amicus curiae* brief from the counsel of record for both parties. The letters of consent have been filed with the Clerk of the Court.

SUMMARY OF THE ARGUMENT

The Court of Appeals for the Federal Circuit has dramatically changed the patent law by establishing a "complete bar" against finding infringement of a patent claim under the doctrine of equivalents in nearly all circumstances where the claim is amended during prosecution, without regard to the reason for amendment. This complete bar rejects a principled examination of the nature of a claim amendment, which would ensure that any prosecution history estoppel is consistent with the applicant's true disclaimer. The Federal Circuit thus has failed to heed this Court's proscription against a rigid rule that invokes a prosecution history estoppel regardless of the reason for a claim amendment.

The scope of a prosecution history estoppel, and its effect on the corresponding application of the doctrine of equivalents, should be guided by the objective determination of whether the patent applicant evinced a clear and unmistakable surrender of otherwise patentable subject matter. The Federal Circuit applies this standard today, *Festo* notwithstanding, but only with respect to argument-based prosecution history estoppel. The application of this same standard to amendment-based prosecution history estoppel would better facilitate the desired balance under the doctrine of equivalents between the definitional and public notice functions of patent claims.

The *Festo* complete bar has been widely criticized. The trial courts have struggled with the application of this inflexible rule, and have questioned its efficacy. The U.S. Patent & Trademark Office ("USPTO") has predicted a negative impact on the agency's operation as a result of more lengthy and complex patent applications. The legal academy and business community as well generally have decried the *Festo* complete bar, providing a bleak outlook that forecasts eroding confidence in patent rights, which weakens incentives to innovate, and increasing patent prosecution costs, which could effectively limit access to the patent system.

The retroactive application of the *Festo* complete bar by the Federal Circuit works a substantial injustice on owners of the more than 1.2 million U.S. patents now in force. The complete bar forecloses the saving procedure this Court expressly provided in *Warner-Jenkinson*, and opens the door for even unscrupulous copyists to avoid infringement liability.

For these reasons, the AIPLA urges the Court to overturn the judgment of the Federal Circuit in *Festo*.

ARGUMENT

I. The Complete Bar Established by the Federal Circuit in *Festo* Contravenes This Court's Doctrine of Equivalents Jurisprudence.

During the course of patent prosecution, an applicant might amend its claims for many reasons, some relating to patentability and others not. Indeed, this Court has recognized that the USPTO might request changes in claim language for reasons other than prior art. *See Warner-Jenkinson Co. v. Hilton Davis Chem. Co.*, 520 U.S. 17, 31-

32 (1997). Given this spectrum, this Court judiciously declined to adopt an inflexible standard with respect to prosecution history estoppel. *See id.* at 32 ("Our prior cases have consistently applied prosecution history estoppel only where claims have been amended for a limited set of reasons, and we see no substantial cause for requiring a more rigid rule invoking an estoppel regardless of the reasons for a change.") (footnote omitted). In contravention of this Court's holding, however, the Federal Circuit has created an absolute rule in which virtually any claim amendment for any reason can bar resort to the doctrine of equivalents. *See Festo Corp. v. Shoketsu Kinzoku Kogyo Kabushiki Co.*, 234 F.3d 558, 569 (Fed. Cir. 2000) (*en banc*) ("When a claim amendment creates prosecution history estoppel with regard to a claim element, there is no range of equivalents available for the amended claim element."), *cert. granted*, 121 S. Ct. 2519 (U.S. June 18, 2001) (No. 00-1543).

In precluding any consideration of the reasons for a claim amendment, the Federal Circuit departs from this Court's jurisprudence on prosecution history estoppel, the crux of which has been the disclaimer, surrender or abandonment of subject matter that otherwise might have been within the enforceable scope of an issued patent. This Court has noted the diminution of a patent holder's rights at stake in the absence of the proper focus on such acts:

> The exclusive right to the thing patented is not secured, if the public are at liberty to make substantial copies of it, varying its form or proportions. And, therefore, the patentee, having described his invention, and shown its principles, and claimed it in that form which most perfectly embodies it, is, in contemplation of law, deemed to claim every

> form in which his invention may be copied, unless he manifests an intention to disclaim some of those forms.

Winans v. Denmead, 56 U.S. 330, 343 (1853). *Cf. Festo*, 234 F.3d at 628 (Linn & Rader, JJ., concurring-in-part, dissenting-in-part) ("[W]e have consistently held that prosecution history estoppel bars infringement by equivalents by reason of the patentee's manifest intent to disavow or abandon a construction of the patent claim as a condition of the patent grant[, which should] be determined from an objective evaluation of the exchange between the examiner and the patentee that occurred in the prosecution history, whether explicit or implicit.") (citations omitted).

When the rationale or context of a claim amendment is ignored, as *Festo* requires, confidence in the correct characterization of the amendment as a bona fide relinquishment of patent rights will be undermined. The *Festo* complete bar vitiates this essential aspect of the prosecution history estoppel inquiry that this Court has long applied. This Court recently reaffirmed the importance of determining the applicant's intention to disclaim otherwise patentable subject matter. *See Warner-Jenkinson*, 520 U.S. at 33 n.7 ("What *is* permissible for a court to explore is the reason (right or wrong) for the objection and the manner in which the amendment addressed and avoided the objection.") (emphasis in original).

a. The touchstone of prosecution history estoppel should be a clear and unmistakable surrender of otherwise patentable subject matter.

Unlike the *Festo* complete bar, the standard applied by the Federal Circuit to argument-based prosecution history

estoppel (where no pertinent claim amendment is at issue) embodies the focus on the disclaimer of subject matter this Court espouses. With respect to argument-based prosecution history estoppel, the Federal Circuit articulated the following test, which it continues to apply even after *Festo*:

> For an estoppel to apply, such assertions in favor of patentability must "evince a clear and unmistakable surrender of subject matter," not an "equivocal" one.
>
> To determine what subject matter has been relinquished, an objective test is applied, inquiring "whether a competitor would reasonably believe that the applicant had surrendered the relevant subject matter."

Pharmacia & Upjohn Co. v. Mylan Pharms., Inc., 170 F.3d 1373, 1377 (Fed. Cir. 1999) (citing *Litton Sys., Inc. v. Honeywell, Inc.*, 140 F.3d 1449, 1458 (Fed. Cir. 1998); *Athletic Alternatives, Inc. v. Prince Mfg., Inc.*, 73 F.3d 1573, 1582 (Fed. Cir. 1996); *Cybor Corp. v. FAS Techs., Inc.*, 138 F.3d 1448, 1457 (Fed. Cir. 1998) (*en banc*)).

The Federal Circuit very recently reaffirmed the application of this standard to argument-based prosecution history estoppel. *See Dow Chem. Co. v. Sumitomo Chem. Co.*, No. 00-1441, 2001 U.S. App. LEXIS 16716, at *51 (Fed. Cir. July 25, 2001) (holding that "Dow's statements do not evince the 'clear and unmistakable surrender of subject matter' necessary to invoke argument-based prosecution history estoppel.") (citation omitted); *see also Sextant Avionique, S.A. v. Analog Devices, Inc.*, 172 F.3d 817, 828 (Fed. Cir. 1999) ("Estoppel by clear and unmistakable surrender without claim amendments may arise even when the arguments to the examiner were not necessary to

distinguish prior art. This principle presupposes that the applicant has made the surrender unmistakable enough that the public may reasonably rely on it.") (citations omitted).

By establishing the *Festo* complete bar, the Federal Circuit has created a separate standard governing amendment-based, as opposed to argument-based, prosecution history estoppel. No justification exists for the disparate treatment. Indeed, in *Festo*, the Federal Circuit relied upon its jurisprudence regarding argument-based prosecution history estoppel to dismiss any distinction between amendment-based prosecution history estoppel arising from amendments required by the USPTO and those arising from voluntary amendments by the applicant. *See Festo*, 234 F.3d at 568 ("Arguments made voluntarily during prosecution may give rise to prosecution history estoppel if they evidence a surrender of subject matter. . . . There is no reason why an amendment-based surrender of subject matter should be given less force than an argument-based surrender of subject matter.").

A clear and unmistakable surrender of otherwise patentable subject matter should be the touchstone of prosecution history estoppel, whether amendment-based or argument-based. This standard would provide the flexibility, as authorized by this Court's jurisprudence, in assessing the reasons for a claim amendment to determine the propriety of a prosecution history estoppel, without compromising the public notice function of the patent claims. *Cf. id.* at 629 (Linn and Rader, JJ., concurring-in-part, dissenting-in-part) ("As long as the reason for an amendment is explained, and a competitor can reasonably determine what subject matter the applicant surrendered, prosecution history estoppel should preclude the patent holder from recapturing only the surrendered subject matter, not from accessing the doctrine

of equivalents entirely. . . . [T]he flexible approach best balances fairness to inventors with certainty to competitors and strikes an appropriate accord between the required rewards for the already expensive and lengthy process of innovation, and the extra public costs of monopoly profits."). In the context of argument-based prosecution history estoppel, the Federal Circuit apparently has neither identified any procedural complications with a "clear and unmistakable surrender of otherwise patentable subject matter" standard, nor provided any evidence that the application of the same standard to amendment-based prosecution history estoppel would be problematic.

Indeed, the Federal Circuit has demonstrated the "workability" of the objective determination of whether or not a patent applicant has manifested a clear and unmistakable surrender of otherwise patentable subject matter. *Compare Pharmacia*, 170 F.3d at 1377 (finding a clear and unmistakable surrender of patent claim coverage to micronized glyburide compositions containing nonspray-dried lactose, because the patent applicant stated, *inter alia*, that "the use of spray-dried lactose is a critical feature of the present invention," in the context of a response, without a corresponding claim amendment, to overcome the patent examiner's prior art-based rejection of the claims), *with Dow*, 2001 U.S. App. LEXIS 16716, at *50 (finding no clear and unmistakable surrender of patent claim coverage to an improved method for preparing glycidyl ethers involving a two-step process, because the patent applicant stated that "as the Examiner agreed, the claimed invention is not limited to a one stage or single step process," in the context of a response, without a corresponding claim amendment, to the patent examiner's statement of reasons for allowance of the claims during reexamination proceedings); *cf. Festo*, 234 F.3d at 575 (describing as "workable," those rules that "can

be relied upon to produce consistent results and give rise to a body of law that provides guidance to the marketplace on how to conduct its affairs.").

In the context of amendment-based prosecution history estoppel, this objective inquiry need not be any less workable. For example, in the case where no clear and unmistakable surrender by the patent applicant can objectively be found, a court should have the authority to consider the underlying reasons for an amendment during prosecution that resulted in a claim scope narrower than that which would have been dictated by the prior art. The court could then rationalize what range of equivalency, if any, the amended claim might deserve.

The advantage of an objective test for a clear and unmistakable surrender is further demonstrated by the fair resolution of the hypothetical that the Federal Circuit posed in *Festo* to illustrate an asserted deficiency in that court's prior approach for determining a range of equivalency to which a patent holder might be entitled. *See Festo*, 234 F.3d at 577 ("Consider, for example, a claim that originally recited a value 'less than twenty' that was amended to recite a value 'less than five' in light of a rejection over prior art disclosing a value of fifteen."). The application of the *Festo* complete bar, according to the Federal Circuit, eliminates speculation or uncertainty by foreclosing any range of equivalency for a value of five or greater, despite the prior art boundary at a value of fifteen. *See id.* In so doing, however, the Federal Circuit turns a blind eye to any reasons for the amendment with respect to subject matter between the values five and fifteen and imputes a surrender, even if no reason for such a surrender is evidenced. *See infra* Section IIIa (discussing the *Warner-Jenkinson* rebuttable presumption).

By contrast, the application of an objective test for a clear and unmistakable surrender lends comparable certainty to the public without disregard for the reasons the patent applicant amended the claim to recite a value below fifteen. For example, a claim amendment to recite a value of five (rather than a higher value still less than fifteen) might have been chosen because the patent applicant's specification stated no value between five and twenty. In any event, if facts in the record indicate the patent applicant understood the claims to cover subject matter between the values five and fifteen, or portions thereof, notwithstanding the amendment, a court should have the authority to consider such evidence and set an appropriate range of equivalency. On the other hand, if the record reflects a clear and unmistakable surrender of this subject matter, a court should give that effect. Only through this analytical framework, and not a complete bar, can a court objectively construe the true scope of a patent.

b. The Federal Circuit overreached by creating an absolute standard under *Festo* that imposes a prosecution history estoppel even where a patent applicant has shown no clear and unmistakable surrender of otherwise patentable subject matter.

This Court has acknowledged the unique role of the Federal Circuit, which was charged by legislative mandate to increase uniformity and thereby "strengthen the United States patent system in such a way as to foster technological growth and industrial innovation." *Markman v. Westview Instruments, Inc.*, 517 U.S. 370, 390 (1996) (citing H.R. Rep. No. 97-312, pp. 20-23 (1981)). By establishing the *Festo* complete bar, however, the Federal Circuit has treated its

legislative mandate as a mandate to legislate. Despite assertions by the Court of Appeals to the contrary, the complete bar will likely hinder technological growth and industrial innovation by encouraging insubstantial design-arounds and undermining confidence in patent rights. *See Festo*, 234 F.3d at 626-27 (Linn & Rader, JJ., concurring-in-part, dissenting-in-part); *cf.* Joseph N. Hosteny, *Does Festo Change Patent Prosecution?*, INTELLECT. PROP. TODAY, May 2001, at 44, 45 ("[T]he unavailability of the doctrine of equivalents 'creates a perverse incentive for patent applicants' to abandon patent applications and employ trade secret protection.").

This Court has also reserved to the Court of Appeals the task of formulating a practical test for the application of the doctrine of equivalents, which is a factual inquiry within the "special expertise" of the Federal Circuit. *Warner-Jenkinson*, 520 U.S. at 40. Similar deference with respect to prosecution history estoppel need not be accorded, however, given this Court's facility with this question of law. *Cf. id.* at 31 (parsing several previous decisions involving prosecution history estoppel and noting that "in each case this Court probed the reasoning behind the Patent Office's insistence upon a change in the claims.").

c. Because it applies regardless of whether or not a clear and unmistakable surrender of otherwise patentable subject matter has occurred, the complete bar discourages patent applicants from clarifying the language of their claims and thwarts a better public understanding of the true reach of the exclusive rights surrounding these inventions.

In seeking the appropriate balance between the definitional and public notice functions of patent claims, this Court has noted:

> [T]o permit imitation of a patented invention which does not copy every literal detail would be to convert the protection of the patent grant into a hollow and useless thing. Such a limitation would leave room for -- indeed encourage -- the unscrupulous copyist to make unimportant and insubstantial changes and substitutions in the patent which, though adding nothing, would be enough to take the copied matter outside the claim, and hence outside the reach of law. . . . [This] would place the inventor at the mercy of verbalism and would be subordinating substance to form. It would deprive him of the benefit of his invention and would foster concealment rather than disclosure of inventions, which is one of the primary purposes of the patent system.

Graver Tank & Mfg. Co. v. Linde Air Prods. Co., 339 U.S. 605, 607-08 (1950).

The *Festo* complete bar abets this danger by weakening the patent grant as an incentive to innovate. In addition, the complete bar discourages a patent applicant from amending its claims for fear of an imputed disclaimer of subject matter, as amendments are judged in hindsight during litigation years later. *Cf.* William James, *Ensuring Broad Claim Coverage after* Festo, 18 COMPUTER & INTERNET LAWYER 13, 14 (2001) ("In response to the guidance provided by the Federal Circuit in *Festo*, patent attorneys should [r]esist the temptation to amend claims to make them more elegant or more technically or grammatically correct."). This forces a patent applicant into a Hobson's choice, when clarification of claim language, which benefits the public, carries the risk of an unintended and potentially devastating loss of rights.

II. The *Festo* Complete Bar Has Met With Criticism From Members of the Judiciary, the USPTO, the Legal Academy, and the Business Community.

a. Trial courts have criticized the *Festo* complete bar and have struggled with the application of this inflexible standard.

Since *Festo*, the trial courts have not experienced the purported benefits of the complete bar in the efficient resolution of prosecution history estoppel issues. *See Creo Prods. Inc. v. Presstek, Inc.*, No. 99-525-GMS, 2001 WL 637397, at *7 (D. Del. May 11, 2001) ("In the immediate aftermath of *Festo*, district courts (and litigants) are struggling to interpret its breadth and applicability."). Indeed, the trial courts have challenged the wisdom of the complete bar. *See id.* at *9 ("The Federal Circuit's choice of the 'complete bar' approach over the 'flexible bar' approach does little to resolve the distinction that centers on the 'range of equivalents' available for a limitation after amendment.");

Control Res., Inc. v. Delta Elecs., Inc., 133 F. Supp. 2d 121, 136 (D. Mass. 2001) ("Such a cursory examination of the prosecution history, however, seems ill-suited to undergird such a dramatic result."); *TM Patents, LLP v. IBM*, 136 F. Supp. 2d 209, 214 (S.D.N.Y. 2001) (characterizing the *Festo* complete bar as "cataclysmic"). Furthermore, the trial courts have indicated that significant unanswered questions remain after *Festo*, which suggest continued ambiguity and likely future controversy. *See Aclara Biosciences, Inc. v. Caliper Techs. Corp.*, 125 F. Supp. 2d 391, 402 (N.D. Cal. 2000); *Creo*, 2001 WL 637397, at *10 (citing *Aclara*).

b. The USPTO has recognized the problems the agency will face from the likely changes in patent prosecution practice that the complete bar rule militates.

In a recent public advisory committee meeting, the USPTO identified various ways in which the *Festo* complete bar would impact USPTO operations. *See* James Toupin & John Whealan, *Effects of Festo Decision on USPTO Operations* (Feb. 28, 2001), at http://www.uspto.gov/web/offices/com/advisory/acrobat/ppacpres2-01.pdf. The USPTO indicated that the effects of *Festo* on the USPTO would be generally negative, involving more rejections and more appeals to the Board of Patent Appeals and Interferences and the courts. *See id.* at 35 (predicting a negative impact if patent applicants are unsuccessful in adjusting their prosecution practices in light of *Festo*). In addition, the USPTO forecast more examiner interviews with greater resistance by patent applicants to accepting claim amendments proposed by examiners, and more substantive arguments to overcome the prior art. *See id.* at 38. Of the possible costs to the agency, the USPTO noted the increased difficulty of examination due to a greater number of more

complex cases, more double patenting issues, and more appeals, as well as a longer pendency of patent applications. *See id.* at 42.

Perhaps the most likely consequence of *Festo* to the USPTO would be increased revenues from fees associated with more filings, claims and petitions. *See id.* at 41 (suggesting that higher quality examination of patent applications might occur also, but only if applicants submitted narrower claims and provided better disclosures of their inventions and the pertinent prior art as a result of *Festo*). However, no guarantee exists that the Congress would permit the USPTO to retain such monies. *Cf.* John Hanchette, *Patent Office Hard-Pressed as Congress and White House Divert Funds*, GANNETT NEWS SERV., July 12, 2001, at ARC ("The patent office will take in close to $1.2 billion in application fees and trademark registrations this year, but Congress is expected to divert $184 million of that for other purposes."). Accordingly, *Festo* might well constitute a burden and not a benefit to the USPTO.

c. The legal academy and business community have criticized the complete bar as upsetting the previously fair balance between the scope of exclusive rights granted to a patentee, given the inherent shortcoming in describing technology through words, and the reliable notice of one's freedom to operate in a patented landscape.

There has been no dearth of criticism of the Federal Circuit holding in *Festo*. *See* Linda Greenhouse, *Supreme Court To Review Case That Redefined Patent Doctrine*, N.Y. TIMES, June 19, 2001, at C1 (describing negative reaction to *Festo* from "an unusually broad array of industry,

educational and intellectual property groups"); *Festo Decision is Condemned at Meetings of ABA and AIPLA*, 61 PAT. TRADEMARK & COPYRIGHT J. (BNA) 414, 414 (2001). These voices have challenged the merits of the *Festo* complete bar. *See* William M. Atkinson *et al.*, *Was Festo Really Necessary?*, 83 J. PAT. & TRADEMARK OFF. SOC'Y 111, 136 (2001) ("The *Festo* Rule, however, goes beyond any concept of the intent of the parties to the prosecution. . . . To fashion a rule limiting the amended claim element to its literal language, goes beyond any reasoned analysis of the prosecution history."). In addition, the critics have questioned the lack of insight by the Federal Circuit over the likely consequences of its decision in *Festo*. *See* Frederick A. Spaeth, *"Equivalents Thereof" v. The Doctrine of Equivalents in the Interpretation of U.S. Patent Claims*, 20 QUINNIPIAC L. REV. 487, 492 (2001) ("The Festo case is notable because of the harshness of its ruling and its break from precedent and . . . because of the significant 'unintended' consequences of its outcome."); Steven E. Koffs, *What's Left of the Doctrine of Equivalents?*, 224 LEGAL INTELLIGENCER 5, 5 (2001) ("In view of the Festo decision, most patentees will probably be more reluctant than ever to enforce their patents, where infringement only lies under the doctrine of equivalents.").

Furthermore, the outcry over the Federal Circuit's decision in *Festo* comes from many corners of the business community, crossing various technology lines. *See* Lisa M. Bowman, *Court Case Spurs Copycat Concerns*, NEWS.COM (Feb. 28, 2001), at http://news.cnet.com/news/0-1005-201-4979242-0.html ("'Whatever the impact is, it's going to be across the board – from biotech to semiconductors, from high-tech to low-tech companies . . . .'"); Jennifer Couzin & Keith Perine, *Gene Schemes: The Race To Patent The Human Genome Is On. Can The Patent Office Keep Up?*,

INDUSTRY STAND., July 23, 2001, at 38, 40 ("If upheld, *Festo* . . . could make it harder for biotech companies to bring patent-infringement cases against competitors . . . ."). To the extent certain members of the business community might be less critical of the *Festo* complete bar, the commonality of such members perhaps is less about industry sector and more about company size advantage. *See* Patrick Neighly, *Weighted Scales of Justice? Two Recent IP laws favor the Big Guy*, AM.'S NETWORK, Feb. 1, 2001, at 22, 22 ("Larger companies wind up with valuable lead time to design around patent applications, dedicating their larger budgets and staff to beat the startup to market and gain roughly the same IP without the pesky business of acquisition. . . . 'The small guy is really being handicapped here . . . .'").

There appears to be broad consensus regarding the adverse financial consequence of *Festo* to all patent applicants in the form of increased costs. *See* Kevin A. Wolff *et al.*, *The Unspoken Loss In Shareholder Value: Patent Rights Take A Hit*, 9 MEALEY'S LITIG. REP.: INTELLECT. PROP. 41, 46-47 (2001) ("The cost to prosecute a patent with any breadth of protection just went up. [In addition,] *Festo* subtly undermines the value of a patent portfolio by increasing the uncertainties associated with future patent protection. . . . The bottom line for those that manage intellectual property is that increased risk will bring increased cost."). In particular, *Festo* could limit the public's access to the patent system. *See U.S. Patent Law Strikes a Blow*, ELECS. TIMES, Feb. 19, 2001, at 20 (asserting that *Festo* "would make patent filing potentially more difficult and expensive – possibly even prohibitively so for small companies and individuals.").

III. The Retroactive Application of the *Festo* Complete Bar Leads to the Unjust Results Against Which This Court Warned in *Warner-Jenkinson*.

This Court not only admonished against the type of standard embodied in the *Festo* complete bar, but also foretold of the inequity that would result from any retroactive application of such a standard. *Warner-Jenkinson*, 520 U.S. at 32 n.6.

> That petitioner's rule might provide a brighter line for determining whether a patentee is estopped under certain circumstances is not a sufficient reason for adopting such a rule. This is especially true where, as here, the PTO may have relied upon a flexible rule of estoppel when deciding whether to ask for a change in the first place. To change so substantially the rules of the game now could very well subvert the various balances the PTO sought to strike when issuing the numerous patents which have not yet expired and which would be affected by our decision.

Id. Indeed, the apparition of retroactivity troubled members of this Court with respect to the rebuttable prosecution history estoppel presumption. *Id.* at 41 (Ginsburg & Kennedy, JJ., concurring).

a. Because it rejects the requirement of a clear and unmistakable surrender of otherwise patentable subject matter, the *Festo* complete bar particularly harms owners of extant patents by foreclosing the saving procedure this Court provided in *Warner-Jenkinson*.

In *Warner-Jenkinson*, this Court carefully crafted a saving procedure in the form of a rebuttable presumption of prosecution history estoppel when a record does not reveal the reason for a claim amendment. 520 U.S. at 33-34.

> Mindful that claims do indeed serve both a definitional and a notice function, we think the better rule is to place the burden on the patent-holder to establish the reason for an amendment required during patent prosecution. The court then would decide whether that reason is sufficient to overcome prosecution history estoppel as a bar to application of the doctrine of equivalents to the element added by that amendment. Where no explanation is established, however, the court should presume that the PTO had a substantial reason related to patentability for including the limiting element added by amendment. In those circumstances, prosecution history estoppel would bar the application of the doctrine equivalents as to that element. The presumption we have described, one subject to rebuttal if an appropriate reason for a required amendment is established, gives proper deference to the role of claims in

> defining an invention and providing public notice, and to the primacy of the PTO in ensuring that the claims allowed cover only subject matter that is properly patentable in a proffered patent application. Applied in this fashion, prosecution history estoppel places reasonable limits on the doctrine of equivalents, and further insulates the doctrine from any feared conflict with the Patent Act.

Id. By creating an absolute rule in which virtually any claim amendment for any reason bars access to the doctrine of equivalents, the Federal Circuit has eliminated the saving procedure this Court provided in *Warner-Jenkinson*. This foreclosure particularly harms the owners of the more than 1.2 million U.S. patents now in force, which were prosecuted under a very different standard, who did not contemplate the drastic consequences associated with a claim amendment that the *Festo* complete bar brings. *See Festo*, 234 F.3d at 618-19 (Michel & Rader, JJ., concurring-in-part, dissenting-in-part).

b. The *Festo* complete bar greatly undermines the public reliance on all extant patents by clearing a path for even unscrupulous copyists to avoid infringement liability, which is the very ill the doctrine of equivalents was designed to remedy.

The *Festo* complete bar supports free riders seeking to escape infringement liability through insubstantial changes to patented inventions, and provides detailed instructions for doing so. *Cf.* Peter J. Ayers, *Federal Circuit's* Festo *is Unfriendly Toward Patent Rights*, 163 N.J.L.J. 29, 33 (2001) ("Any patent that was prosecuted

under pre-*Festo* rules may contain previously unobservable safe harbors for licensees and unscrupulous copiers alike."). The Federal Circuit decision in *Festo* transforms apparently trivial modifications by those previously seen as unscrupulous copyists into legitimate design-arounds. Regardless of this new gloss, such acts add nothing to the progress of the useful arts. Moreover, this erodes confidence in patent protection and weakens incentives to innovate. *See* Bowman, *supra* ("Critics of the decision say it could spawn rampant copycat products and quash innovation because companies won't want to spend research and development money on products that can be easily imitated and sold by a competitor. Instead, they'll take somebody else's work and make minor alterations.").

CONCLUSION

The *Festo* complete bar contravenes this Court's doctrine of equivalents jurisprudence and should be discarded in favor of an objective determination of whether the patent applicant has evinced a clear and unmistakable surrender of otherwise patentable subject matter. The AIPLA accordingly urges this Court to overturn the judgment of the Federal Circuit in *Festo*.

Respectfully submitted,

M. ANDREA RYAN
President
AMERICAN INTELLECTUAL
PROPERTY LAW ASSOCIATION
2001 Jefferson Davis Hwy.
Arlington, Virginia 22202
(703) 415-0780

LAWRENCE M. SUNG
COUNSEL OF RECORD
Assistant Professor
UNIVERSITY OF MARYLAND
SCHOOL OF LAW
515 West Lombard Street
Baltimore, Maryland 21201
(410) 706-1052

JANICE M. MUELLER
Associate Professor
JOHN MARSHALL LAW SCHOOL
315 S. Plymouth Court
Chicago, Illinois 60604
(312) 427-2737

AUGUST 2001

REPRINTED COPY

No. 00-1543

Aug 31 2001
(40)
Supreme Court, U.S.
FILED
AUG 31 2001
CLERK

IN THE

Supreme Court of the United States

FESTO CORPORATION,

Petitioner,

v.

SHOKETSU KINZOKU KOGYO KABUSHIKI CO., LTD., A/K/A SMC CORPORATION AND SMC PNEUMATICS, INC.,

Respondents.

On Writ of Certiorari to the United States Court of Appeals for the Federal Circuit

BRIEF OF MINNESOTA MINING AND MANUFACTURING COMPANY, ELI LILLY AND COMPANY, HENKEL CORPORATION, JOHNSON & JOHNSON, PFIZER INC., PPG INDUSTRIES, INC., REXAM BEVERAGE CAN COMPANY, SUN MICROSYSTEMS, INC., AND VERIZON COMMUNICATIONS INC., AS *AMICI CURIAE* IN SUPPORT OF PETITIONER

GARY L. GRISWOLD
KEVIN H. RHODES
MINNESOTA MINING AND MANUFACTURING COMPANY
P.O. Box 33427
St. Paul, MN 55133-3427
(651) 733-8904

CARTER G. PHILLIPS*
JOSEPH R. GUERRA
MARK E. HADDAD
SIDLEY AUSTIN BROWN & WOOD
1501 K Street, N.W.
Washington, D.C. 20005
(202) 736-8000

Counsel for Amici Curiae

* Counsel of Record

[Additional Counsel Listed on Inside Cover]

August 31, 2001

WILSON-EPES PRINTING CO., INC. – (202) 789-0096 – WASHINGTON, D. C. 20001

40 pp

ROBERT A. ARMITAGE
ELI LILLY AND COMPANY
Lilly Corporate Center
Indianapolis, IN 46285

PHILIP S. JOHNSON
JOHNSON & JOHNSON
One Johnson & Johnson Plaza
New Brunswick, NJ 08933

JOHN K. WILLIAMSON
LINDA PINGITORE
PPG INDUSTRIES, INC.
One PPG Place
Pittsburgh, PA 15228

LEONARD CHARLES SUCHYTA
VERIZON COMMUNICATIONS INC.
1095 Avenue Of The Americas
New York, NY 10036

WAYNE C. JAESCHKE
HENKEL CORPORATION
2200 Renaissance Blvd.
Gulph Mills, PA 19406

PETER C. RICHARDSON
LAWRENCE C. AKERS
PFIZER INCORPORATED
235 East 42nd Street
New York, NY 10017

MARY J. SCHNURR
REXAM BEVERAGE CAN
COMPANY
8770 W. Bryn Mawr Ave.
Chicago, IL 60631

KENNETH OLSON
SUN MICROSYSTEMS, INC.
901 San Antonio Rd.
Palo Alto, CA 94303

QUESTIONS PRESENTED

1) Whether every claim-narrowing amendment designed to comply with any provision of the Patent Act – including those not related to prior art – automatically creates prosecution history estoppel regardless of the reason for the amendment; and

2) Whether the finding of prosecution history estoppel completely bars the application of the doctrine of equivalents.

AMICI CURIAE JOINING THIS BRIEF

Minnesota Mining and Manufacturing Company

Eli Lilly and Company

Henkel Corporation

Johnson & Johnson

Pfizer Incorporated

PPG Industries, Incorporated

Rexam Beverage Can Company

Sun Microsystems, Incorporated

Verizon Communications Inc.

Pursuant to Rule 29.6 of this Court, the parent corporations of the Henkel Corporation are Henkel of Americas and Henkel KgaA. The parent corporation of the Rexam Beverage Can Company is Rexam PLC. No other publicly held company owns 10% or more of the stock in these corporations.

The Minnesota Mining and Manufacturing Company, Eli Lilly and Company, Johnson & Johnson, Pfizer Incorporated, PPG Industries, Incorporated, Sun Microsystems, Incorporated, and Verizon Communications Inc. have no parent corporations, and no publicly held company owns 10% or more of the stock in these corporations.

TABLE OF CONTENTS

	Page
QUESTIONS PRESENTED	i
AMICI CURIAE JOINING THIS BRIEF	ii
TABLE OF AUTHORITIES	v
STATEMENT OF INTEREST	1
INTRODUCTION AND SUMMARY OF ARGUMENT	2
I. THE DECISION BELOW DRASTICALLY ALTERS THE BALANCE THE PATENT LAWS STRIKE BETWEEN MEANINGFUL PATENT PROTECTION AND FAIR NOTICE	6
A. To Foster Innovation, Patent Law Must Provide Both Meaningful Protection And Fair Notice	6
B. The Doctrine Of Equivalents Is Essential To Meaningful Patent Protection	7
C. By Restricting The Doctrine Of Equivalents, The Decision Below Discourages The Research Necessary To Develop Breakthrough Inventions	9
II. THE MAJORITY'S DRAMATIC ALTERATION OF THE BALANCE BETWEEN MEANINGFUL PATENT PROTECTION AND FAIR NOTICE IS UNJUSTIFIED	11
A. This Court's Decisions Preclude Adoption Of The Complete Bar Rule	12
1. This Court Has Embraced A Flexible Bar Approach To Prosecution History Estoppel	12

TABLE OF CONTENTS – continued

	Page
2. The Majority Did Not And Cannot Distinguish This Court's Prior Cases	14
B. Notice And Certainty Have Not Recently Become Paramount Goals Of The Patent Laws	15
1. This Court Long Ago Recognized The Importance Of Notice And Certainty	16
2. In Its 1952 Amendments To The Patent Statute, Congress Favored Patent Protection Over Notice And Certainty	18
3. This Court's Recent Decisions Demonstrate That Notice And Certainty Are Not The "Paramount" Aims Of The Patent Laws	19
C. The Flexible Bar Approach Is Not Unworkable	21
1. The Flexible Approach Involves A Straightforward And Practical Inquiry	21
2. This Straightforward And Practical Inquiry Is Not Unworkable	24
III. ANY ADJUSTMENT IN THE BALANCE BETWEEN MEANINGFUL PROTECTION AND FAIR NOTICE IS FOR CONGRESS TO MAKE	27
CONCLUSION	29

TABLE OF AUTHORITIES

CASES	Page
Aro Mfg. Co. v. *Convertible Top Replacement Co.*, 365 U.S. 336 (1961)	27
Bonito Boats, Inc. v. *Thunder Craft Boats, Inc.*, 489 U.S. 141 (1989)	6
California v. *FERC*, 495 U.S. 490 (1990)	24
Exhibit Supply Co. v. *Ace Patents Corp.*, 315 U.S. 126 (1942)	14
General Elec. Co. v. *Wabash Appliance Corp.*, 304 U.S. 364 (1938)	17, 18
Glaxo Group Ltd. v. *Ranbaxy Pharms., Inc.*, No. 00-1151, 2001 WL 936347 (Fed. Cir. Aug. 20, 2001)	3
Goodyear Dental Vulcanite Co. v. *Davis*, 102 U.S. 222 (1880)	12, 13, 17
Graver Tank & Mfg. Co. v. *Linde Air Prods. Co.*, 339 U.S. 605 (1950)	7, 8, 17
Halliburton Oil Well Cementing Co. v. *Walker*, 329 U.S. 1 (1946)	18
Hughes Aircraft Co. v. *United States*, 717 F.2d 1351 (Fed. Cir. 1983), *overruled by Festo Corp.* v. *Shoketsu Kinzoku Kogyo Kabushiki Co.*, 234 F.3d 558 (Fed. Cir. 2000)	2, 24
Hurlbut v. *Shillinger*, 130 U.S. 456 (1889)	13, 15
Lorillard v. *Pons*, 434 U.S. 575 (1978)	27
Markman v. *Westview Instruments, Inc.*, 517 U.S. 370 (1996)	19
Merrill v. *Yeomans*, 94 U.S. 568 (1876)	16, 17
Mycogen Plant Science, Inc. v. *Monsanto Co.*, No. 00-1127, 2001 WL 910389 (Fed. Cir. Aug. 14, 2001)	4
Patterson v. *McLean Credit Union*, 491 U.S. 164 (1989)	24, 25
Payne v. *Tennessee*, 501 U.S. 808 (1991)	24

TABLE OF AUTHORITIES – continued

	Page
Schillinger v.*Greenway Brewing Co.*, 17 F. 244 (C.C.N.D.N.Y. 1883)	14
Square D Co. v. *Niagara Frontier Tariff Bureau, Inc.*, 476 U.S. 409 (1986)	28
Union Carbon Co. v. *Binney & Smith Co.*, 317 U.S. 228 (1942)	17
Warner-Jenkinson Co. v. *Hilton Davis Chem. Co.*, 520 U.S. 17 (1997)	3, 18, 19, 20
White v. *Dunbar*, 119 U.S. 47 (1886)	17
Winans v. *Denmead*, 56 U.S. (15 How.) 330 (1853)	16
Yarway Corp. v. *Eur-Control USA, Inc.*, 775 F.2d 268 (Fed. Cir. 1985)	11

STATUTES

Consolidated Patent Act of 1870, ch. 230, 16 Stat. 198	16
35 U.S.C. § 112	18, 19

RULE

Sup. Ct. R. 37.6	1

LEGISLATIVE HISTORY

Patent Competitiveness and Technological Innovation Act, H.R. 5598, 101st Cong. (1990)	28
Biotechnology Patent Protection Act of 1991, H.R. 1417, 102d Cong. (1991)	28
Patent Law Codification and Revision: Hearings on H.R. 3760 before Subcomm. No. 3 of the House Comm. on the Judiciary 82d Cong. (1951)	27

TABLE OF AUTHORITIES – continued

	Page
Subcomm. on Patents, Trademarks, and Copyrights, Senate Comm. on the Judiciary, 85th Cong., *An Economic Review of the Patent System: Study No. 15* (Comm. Print 1958)	28
Subcomm. on Patents, Trademarks, and Copyrights, Senate Comm. on the Judiciary, 85th Cong., *The Impact of the Patent System on Research: Study No. 11* (Comm. Print 1958)	28

SCHOLARLY AUTHORITIES

Alden F. Abbott, *Developing a Framework for Intellectual Property Protection to Advance Innovation, in Intellectual Property Rights in Science, Technology, and Economic Performance* (Francis W. Rushing & Carole G. Brown eds., 1990)	9, 10, 11
Ted Apple, *Enablement Estoppel: Should Prosecution History Estoppel Arise When Claims Are Amended to Overcome Enablement Rejections?*, 13 Santa Clara Computer & High Tech. L.J. 107 (1997)	22
Heinz Bardehle, *Equivalents and International Patent Law Harmonization*, 20 AIPLA Q. J. 119 (1992)	8
Donald S. Chisum, *The Scope of Protection for Patents After the Supreme Court's Warner-Jenkinson Decision: The Fair Protection—Certainty Conundrum*, 14 Santa Clara Computer & High Tech. L.J. 1 (1998)	7, 16
Rochelle C. Dreyfuss, *Dethroning Lear: Licensee Estoppel and the Incentive to Innovate*, 72 Va. L. Rev. 677 (1986)	9

TABLE OF AUTHORITIES – continued

	Page
P.J. Federico, *Commentary on the New Patent Act*, 75 J. Pat. & Trademark Off. Soc'y 161 (1993) (1954)	19
Paul J. Otterstedt, *Unwrapping File Wrapper Estoppel in the Federal Circuit: A New Economic Policy Approach*, 67 St. John's L. Rev. 405 (1993)	8
Richard P. Rozek, *Protection of Intellectual Property Rights, in Intellectual Property Rights in Science, Technology, and Economic Performance* (Francis W. Rushing & Carole G. Brown eds., 1990)	9, 10
John R. Thomas, *On Preparatory Texts and Proprietary Technologies: The Place of Prosecution Histories in Patent Claim Interpretation*, 47 UCLA L. Rev. 183 (1999)	1
Harold C. Wegner, *Equitable Equivalents: Weighing the Equities to Determine Patent Infringement in Biotechnology and Other Emerging Technologies*, 18 Rutgers Computer & Tech. L.J. 1 (1992)	7, 10

OTHER AUTHORITY

European Comty., *Protocol on the Interpretation of Article 69 of the Convention* (Oct. 5, 1973), *reprinted in* 4 Euro. Union L. Rep. (CCH) ¶ 5791 (July 13, 1976)	8
Edward G. Fiorito, *WIPO Experts Make Progress on Patent Harmonization Draft*, 41 Pat. Trademark & Copyright J. (BNA) 231 (1990)	8

STATEMENT OF INTEREST

Amici are United States corporations of various sizes, involved in a variety of different businesses.[1] Some of them obtain relatively large numbers of United States patents every year (*e.g.*, 3M obtained 483 U.S. patents in 2000; Sun Microsystems obtained 465); some obtain far fewer. All have been involved in patent litigation, both as plaintiffs and as defendants.

Amici believe that meaningful patent protection is essential to encouraging investment in research and development, and that the doctrine of equivalents is a critical component of meaningful patent protection. The doctrine prevents the appropriation of inventions by competitors who use insubstantial changes to escape the literal terms of patent claims. Without such protection from free-riding competitors, companies will have significantly reduced incentives to undertake the costly research that precedes many breakthrough advances.

The decision below, however, effectively precludes resort to the doctrine of equivalents for all amended patent claims. It is hard to overstate the significance of the decision below. Of the approximately 1.2 million patents now in force, most were amended during their prosecution before the Patent and Trademark Office (PTO). John R. Thomas, *On Preparatory Texts and Proprietary Technologies: The Place of Prosecution Histories in Patent Claim Interpretation*, 47 UCLA L. Rev. 183, 188 (1999); see also Pet. App. 69a (Michel, J., concurring-in-part, dissenting-in-part) (same). When they

---

[1] The parties have consented to the filing of this brief, and letters of consent are being filed herewith. In accordance with Supreme Court Rule 37.6, *amici* represent that no counsel for a party authored this brief in whole or in part and no person or entity, other than *amici*, their members, or their counsel made a monetary contribution to the preparation or submission of this brief.

amended these patents, today's patent owners understood that they were *not* surrendering their right to use the doctrine of equivalents to protect their investments in their patented technology. See *Hughes Aircraft Co.* v. *United States*, 717 F.2d 1351 (Fed. Cir. 1983). Despite this settled expectation, the decision below strips owners of amended patents of this right in order to promote the supposedly "paramount" interests of notice and certainty.

Amici believe that the decision below will have far-reaching adverse effects on their research and development efforts. The ultimate goal of the patent law is to promote innovation, and this Court has long recognized that innovation is best fostered by balancing the need for fair notice against the need for meaningful patent protection. By drastically altering this balance, the decision below has unleashed a major change in industrial policy without proper study or justification.

Amici submit that this Court should reinstate the flexible bar approach to prosecution history estoppel. Claim-narrowing amendments designed to ensure compliance with the Patent Act should not automatically bar application of the doctrine of equivalents. Rather, courts should examine the reason for an amendment to determine whether the patentee surrendered subject matter and, if so, the extent of that surrender. This approach will restore the longstanding balance between notice and meaningful protection, and will leave it to Congress, with its greater expertise, to decide whether that balance should be changed.

INTRODUCTION AND SUMMARY OF ARGUMENT

The majority ruled that any amendment that narrows a claim for any reason relating to patentability operates as a complete bar to any range of equivalents for the amended claim element. In its subsequent decisions, the Federal Circuit has confirmed the sweeping nature of this new rule.

First, virtually all amendments (except perhaps those that correct typographical errors) "narrow" a patent claim. This is vividly illustrated by the decision in *Glaxo Group Ltd.* v. *Ranbaxy Pharmaceuticals, Inc.*, No. 00-1151, 2001 WL 936347 (Fed. Cir. Aug. 20, 2001). There, the patent in suit originally recited a drug compound "in highly pure, substantially amorphous form." *Id.* at *3. When the examiner objected that this phrase was indefinite because it did not indicate "how much crystalline material is permitted," *id.* at *5, the patentee amended the claim to recite "in amorphous form essentially free from crystalline material." *Id.* at *1. Although the amendment merely clarified the original language, the court deemed it a "narrowing" amendment because the "essentially free" language had been imported from a dependent claim. *Id.* at *3.

Similarly, virtually all amendments relate to patentability. The *Festo* majority explained that "[b]ecause a claim will not issue unless it satisfies the requirements of section 112, an amendment made to satisfy the statute is an amendment made for a reason related to patentability." Pet. App. 52a. By this logic, all clarifications, no matter how trivial, made to overcome a § 112 indefiniteness objection "relate to patentability," and thus foreclose resort to the doctrine of equivalents. See *id.* at 58a (Plager, J., concurring) ("patentability" is "a term now broadly defined").

Moreover, to show that an amendment was unrelated to patentability, a patentee must rely "*solely* upon the public record of the patent's prosecution." Pet. App. 47a.[2] Because this requirement did not exist when patentees prosecuted their patents, they had no reason to ensure that the public record reflected the reason for an amendment. See *Warner-Jenkinson Co.* v. *Hilton Davis Chem. Co.*, 520 U.S. 17, 41 (1997) (Ginsburg, J., concurring). In fact, because applicants and examiners often discuss amendments over the telephone,

---

[2] Unless otherwise indicated, all emphases have been added.

and because "examiners are notoriously terse when abstracting such interviews," Thomas, *supra* at 190, the owners of existing patents will rarely be able to satisfy this new standard.

Thus, as the Federal Circuit's subequent decisions confirm, the decision below eliminates resort to the doctrine of equivalents for most current patents. See Pet. App. 69a (Michel, J., concurring-in-part, dissenting-in-part).[3] This is precisely what the majority intended. In announcing its complete bar rule, the majority asserted that, during the past 20 years, "the notice function of patent claims has become paramount, and the need for certainty as to the scope of patent protection has been emphasized." *Id.* at 24a. Believing that "certainty will stimulate investment in improvements and design-arounds," *id.* at 30a, the majority sought to promote the supposedly "paramount" goals of notice and certainty by "rein[ing] in the doctrine of equivalents." *Id.*

The paramount goal of the patent laws, however, is to promote innovation, and that goal is served by balancing the interests of fair notice and meaningful protection. The doctrine of equivalents, in turn, is an essential component of meaningful patent protection. By significantly restricting the availability of the doctrine, the majority has fundamentally altered the well-settled economic incentives that drive the research and development necessary to most innovation, thereby encouraging derivative and trivial improvements at

---

[3] That the complete bar rule applies only to amended claims elements does not limit the decision's impact. For example, most patents consist of a series of claims that derive from, or are "dependent" upon, a smaller number of "independent" claims. Because independent claims reflect the broadest statement of an invention, examiners typically focus on, and request amendments to, these broad claims. Any amendment to an independent claim thus "narrows" the many other claims that depend on that claim. *See Mycogen Plant Science, Inc.* v. *Monsanto Co.*, No. 00-1127, 2001 WL 910389, at *3 (Fed. Cir. Aug. 14, 2001).

the expense of costly breakthroughs and inventive design-arounds.

The majority failed to justify this fundamental change in patent policy. This Court long ago adopted the substance, if not the modern nomenclature, of the flexible bar approach, and the majority failed to show otherwise. Nor have notice and certainty recently become "paramount" goals of the patent laws. This Court has long recognized the importance of notice and certainty, yet that recognition has always co-existed with the recognition that the doctrine of equivalents is crucial to fostering innovation. In fact, in *Warner-Jenkinson*, this Court rejected precisely the types of bright-line rules the majority embraced.

Similarly, there is no merit to the suggestion that the flexible bar approach is somehow "unworkable." That approach involves a straightforward and practical inquiry that courts and competitors can and do perform regularly. No change in the law has undermined the conceptual underpinnings of the rule or rendered it irreconcilable with competing legal doctrines. A rule cannot be deemed "unworkable" merely because the outcomes of individual cases turn on specific facts.

Ultimately, any change in the balance between fair notice and meaningful protection should be made by Congress. In the 1952 Patent Act, Congress necessarily approved the balance this Court had long struck, and in fact fine-tuned that balance in certain respects that favored patent protection over notice and certainty. Moreover, Congress has the institutional competence to assess the need for any adjustment in that balance and the ability to tailor any adjustment to particular industries or circumstances.

I. THE DECISION BELOW DRASTICALLY ALTERS THE BALANCE THE PATENT LAWS STRIKE BETWEEN MEANINGFUL PATENT PROTECTION AND FAIR NOTICE.

In its decision below, the majority sought to cabin the doctrine of equivalents in order to promote the supposedly "paramount" interests of notice and certainty. Pet. App. 24a-30a. Contrary to the majority's view, however, the "ultimate goal of the patent system" is to foster innovation and "bring new designs and technologies into the public domain through disclosure." *Bonito Boats, Inc.* v. *Thunder Craft Boats, Inc.*, 489 U.S. 141, 151 (1989). This truly paramount goal requires a careful balance between notice and certainty on the one hand, and meaningful patent protection on the other hand. Because the doctrine of equivalents is essential to meaningful patent protection, the majority's drastic new limitation on its availability skews the economic incentives that drive the research and development necessary to true innovation.

A. To Foster Innovation, Patent Law Must Provide Both Meaningful Protection And Fair Notice.

As this Court has explained, the patent system fosters innovation through "a carefully crafted bargain." *Id.* at 150. Because an inventor can "keep his invention secret and reap its fruits indefinitely," the law gives inventors exclusive rights to practice inventions for a limited period of time in exchange for "disclosure and the consequent benefit to the community." *Id.* at 151. "The attractiveness of such a bargain, [however,] and its effectiveness in inducing creative effort and disclosure of the results of that effort, depend almost entirely on a backdrop of free competition in the exploitation of unpatented designs and innovations." *Id.*

This "carefully crafted bargain" "balances competing concerns." Brief for the United States as *Amicus Curiae*, 1996 WL 172221, at *12, *Warner-Jenkinson Co.* v. *Hilton Davis Chem. Co.*, 520 U.S. 17 (1997) (No. 95-728) ("US

Warner-Jenkinson Br."). To promote innovation, "a patent must provide meaningful protection for the disclosed invention, or inventors will choose to keep their inventions secret." *Id.* Yet a patent must also provide "notice of the nature and limits of the exclusive rights it creates" so that others will know what they may "safely use." *Id.* at *12-*13.

The tension between these competing interests is "inherent in any patent system that requires a fixed, written description of the invention (*i.e.*, a 'claim')." Donald S. Chisum, *The Scope of Protection for Patents After the Supreme Court's Warner-Jenkinson Decision: The Fair Protection—Certainty Conundrum*, 14 Santa Clara Computer & High Tech. L.J. 1, 7 (1998). On the one hand, "lack of clarity can impede legitimate investment in technology-based products and services. On the other hand, strict and literal adherence to the written claim in determining the scope of the protection can invite subversion of a valuable right," thereby destroying the incentive to invent. *Id.* Indeed, "[p]atent protection that can be easily circumvented is antithetical to building a strong research-based industrial economy." Harold C. Wegner, *Equitable Equivalents: Weighing the Equities to Determine Patent Infringement in Biotechnology and Other Emerging Technologies*, 18 Rutgers Computer & Tech. L.J. 1, 31 (1992).

B. The Doctrine Of Equivalents Is Essential To Meaningful Patent Protection.

As this Court has long recognized, the doctrine of equivalents is essential to providing the meaningful protection necessary to induce the creation and disclosure of inventions. Because "[o]utright and forthright duplication is a dull and very rare type of infringement," the doctrine prevents appropriations of inventions by those who use "unimportant and insubstantial changes" to escape the literal terms of a patent claim. *Graver Tank & Mfg. Co.* v. *Linde Air Prods. Co.*, 339 U.S. 605, 607 (1950). To protect patentees from literal infringement alone, this Court has explained, "would

place the inventor at the mercy of verbalism[,] . . . . would deprive him of the benefit of his invention and would foster concealment rather than disclosure of inventions, which is one of the primary purposes of the patent system." *Id.*

The last half century has confirmed the wisdom of this Court's observation that, without the doctrine of equivalents, patent protection is "a hollow and useless thing." *Id.* "Countries in which patent infringement suits play a role acknowledge the importance of equivalents." Heinz Bardehle, *Equivalents and International Patent Law Harmonization*, 20 AIPLA Q. J. 119, 120 (1992). Thus, the European Patent Convention applies the doctrine of equivalents to European patent claims.[4] Indeed, the United States has sought worldwide application of the doctrine through its delegation to the World Intellectual Property Organization Committee of Experts on Patent Harmonization. Paul J. Otterstedt, *Unwrapping File Wrapper Estoppel in the Federal Circuit: A New Economic Policy Approach*, 67 St. John's L. Rev. 405, 421 (1993).[5] The United States "seeks to encourage foreign nations that provide patents under their own laws to United States citizens and corporations to afford patent protection commensurate with that provided in the

---

[4] The Protocol on Article 69 of the Convention states that this Article, which defines the scope of patent protection, "should not be interpreted in the sense that the extent of the protection conferred by a European patent is to be understood as that defined by the strict, literal meaning of the wording used in the claim." European Comty., *Protocol on the Interpretation of Article 69 of the Convention* (Oct. 5, 1973), *reprinted in* 4 Eur. Union L. Rep. (CCH) ¶ 5791 (July 13, 1976). *See also* Bardehle, *supra* at 120 (although the Protocol does not use the name "equivalents," the "inclusion of equivalents is intended").

[5] The World Intellectual Property Organization Draft Treaty specifically sets forth, in Article 21, this Court's "function-way-result" test for equivalence. *See* Edward G. Fiorito, *WIPO Experts Make Progress on Patent Harmonization Draft*, 41 Pat. Trademark & Copyright J. (BNA) 231, 238 (1990).

United States by the doctrine of equivalents." US *Warner-Jenkinson* Br. at *1-*2.

C. By Restricting The Doctrine Of Equivalents, The Decision Below Discourages The Research Necessary To Develop Breakthrough Inventions.

In adopting its complete bar rule, the majority believed that certainty as to the scope of a narrowed claim "will stimulate investment in improvements and design-arounds," and will ensure that "technological advances" will not go "wasted and undeveloped due to fear of litigation." Pet. App. 30a. Although it recognized that a flexible bar "affords the patentee more protection," the majority did not "believe that th[is] benefit outweighs the costs of uncertainty." *Id.* This terse cost-benefit analysis fails to take into account the role the doctrine of equivalents plays in promoting the type of breakthrough inventions that make subsequent "improvements" and "design-arounds" possible.

The federal patent system, and the constitutional grant of authority from which it is derived, are based on the recognition that "[i]nvention is an uncertain business," and that, "[t]o spur investment in it, inventors must be reasonably assured that they will be able to recoup their costs and earn a profit." Rochelle C. Dreyfuss, *Dethroning Lear: Licensee Estoppel and the Incentive to Innovate*, 72 Va. L. Rev. 677, 679 (1986), see also Richard P. Rozek, *Protection of Intellectual Property Rights, in Intellectual Property Rights in Science, Technology and Economic Performance* 31, 35 (Francis W. Rushing & Carole G. Brown eds., 1990) ("[T]o bear th[e] uncertainty" of the innovative process, "some possibility for a reward must exist. If innovators are not rewarded, they will not create . . . ."). Without the reward of meaningful patent protection, inventors face the risk that their truly pioneering inventions will "be used by free-riding competitors . . . that have not shared in the expense of creating intellectual property." Alden F. Abbott, *Developing a Framework for Intellectual Property Protection to Advance*

Innovation, in Intellectual Property Rights in Science, Technology and Economic Performance 311, 317 (Francis W. Rushing & Carole G. Brown eds., 1990). Absent protection from free-riders, "firms have weak incentives to absorb the costly expenditures needed to develop intellectual property." *Id.* They "run the risk that . . . their innovations w[ill] earn insufficient profits to offset the losses stemming from failed research efforts," and "capital markets w[ill] be far less willing to provide funds for independent research efforts." *Id.* at 321.

Indeed, studies from the 1980s showed that, even when the Federal Circuit was applying its flexible bar, over half of all patented inventions were imitated within three to four years of introduction, and the average costs of imitation ranged from 65 to 75 percent of the innovator's costs. *Id.* at 324 (citing studies). These studies confirm that the degree of patent protection "directly affects the profitability of R&D projects and thus the resources allocated to R&D. Utlimately, the degree of protection determines the expected number of new products [and] processes . . . ." Rozek, *supra* at 44.

The majority's complete bar rule fundamentally alters established economic incentives in a manner that favors derivative "improvements" at the expense of major advances that require significant investments of time and money. Curtailing the availability of the doctrine of equivalents limits the protection afforded patentees, and thus increases the risk that inventions requiring large investments will be appropriated by imitators. That risk will inevitably deter investment in the research and development that leads to many major advances, as well as to the numerous "spillover" benefits that such efforts spawn. See Wegner, *supra* at 31 (weak patent protection "is antithetical to building a strong

research-based industrial economy").[6] The complete bar rule thus discourages bold and costly innovation, and encourages minor improvements that do not entail large investments in research and development.

Similarly, the complete bar rule discourages, rather than encourages, inventive design-arounds. The rule invites imitators to appropriate an invention by making "'unimportant and insubstantial'" changes to amended claim elements. See Pet. App. 105a (Michel, J., concurring-in-part, dissenting-in-part). Such changes are not "technological advances," *id.* at 30a, but rather are trivial variations intended to avoid patent infringement. By contrast, the doctrine of equivalents prompts competitors who seek to design around patented inventions to make their own *inventive* contributions. See *Yarway Corp.* v. *Eur-Control USA, Inc.*, 775 F.2d 268, 277 (Fed. Cir. 1985) ("the incentive to 'design around' patents is a positive result of" patent protection); Abbott, *supra* at 320 (strong patent protection "caus[es] some firms to try to invent around patents. . . . [thus] engendering product and process improvements or additional innovative goods and services").

In short, the majority's complete bar rule works a sea-change in the economic incentives that drive the research and development necessary to most innovation, and thus works a sea-change in the nation's industrial policy. The majority offered no cogent justification for this fundamental change.

II. THE MAJORITY'S DRAMATIC ALTERATION OF THE BALANCE BETWEEN MEANINGFUL PATENT PROTECTION AND FAIR NOTICE IS UNJUSTIFIED.

Despite the sweeping implications of its decision, the majority offered little justification for its complete bar rule. It

---

[6] Studies have shown that, "because of spillovers of information," "the return to society on R&D is frequently much higher than the return to the innovating firm." Abbott, *supra* at 324, 325.

asserted that no decision of this Court required adherence to a flexible approach to prosecution history estoppel, and that, during the past 20 years, "the notice function of patent claims has become paramount, and the need for certainty . . . has been emphasized." Pet. App. 24a. The majority further asserted that the flexible bar approach had proved "'unworkable.'" *Id.* at 25a. None of these claims withstands scrutiny.

A. This Court's Decisions Preclude Adoption Of The Complete Bar Rule.

As Judge Michel explained in detail, this Court long ago embraced, in substance if not in name, a flexible approach to prosecution history estoppel. That is, in applying the principles that are now known by the name "prosecution history" or "file wrapper" estoppel, the Court considered the scope of subject matter surrendered by an amendment of patent claims and whether any range of equivalents remained available in light of that surrender. The majority offered no meaningful response to Judge Michel's showing.

1. This Court Has Embraced A Flexible Bar Approach to Prosecution History Estoppel.

Without canvassing all of the cases Judge Michel cited, it suffices to discuss two in order to demonstrate that, contrary to the majority's view, this Court has embraced a flexible approach to prosecution history. In *Goodyear Dental Vulcanite Co.* v. *Davis*, 102 U.S. 222 (1880), the Court considered whether a dental plate made of celluloid infringed a patent claiming a dental plate made of vulcanized rubber. To answer that question, the Court considered not only the language of the claim and specification, but amendments to the claim made during the reissue process. The original claim had specified a plate made "of rubber, *or some other elastic material*," *id.* at 224-25. The patentee, however, had amended the claim to specify a plate "'of hard rubber, or

vulcanite, *i.e.*, an elastic material,'" and explained that "'[t]he vulcanizing process makes all the difference.'" *Id.* at 227-28.

Under the majority's complete bar rule, this amendment alone would have made it unnecessary to consider whether celluloid was equivalent to vulcanized rubber. This Court, however, acknowledged that the patentee was still entitled to some range of equivalents for this amended element, *id.* at 230, and deemed it "essential" to determine what material the patentee had claimed as part of his invention "and what can be considered an equivalent therefor." *Id.* at 224. Indeed, although the Court ultimately found that celluloid was not equivalent to "'hard rubber, or vulcanite,'" *id.* at 228 (quoting claim), it stated that "substances[] other than rubber . . . might have been an equivalent." *Id.* at 227.

In *Hurlbut* v. *Shillinger*, 130 U.S. 456 (1889), the Court found infringement under the doctrine of equivalents despite the fact that the patentee had amended the specification and claim, and expressly disclaimed part of the reach of his original claim. *Id.* at 463. The patent, which concerned a method for forming concrete paving blocks, claimed an "'arrangement of tar-paper or its equivalent between adjoining blocks of concrete,'" *id.*, such that individual blocks could be removed without disrupting adjacent blocks. The original specification stated that "'the tar-paper may be omitted and the blocks formed without interposing anything between their joints.'" *Id.* The patentee later disclaimed "the forming of blocks from plastic material without interposing anything between their joints while in the process of formation." *Id.* Again, under the majority's complete bar rule, this amendment and disclaimer would have precluded *any* finding of infringement by equivalents. This Court ruled, however, that "the temporary use of [a] trowel or cutting instrument, to divide [concrete] blocks, is the equivalent of the tar-paper of the Shillinger patent." *Id.* at 469.

In both cases, therefore, this Court considered what range of equivalents remained available despite claim amendments

(or a disavowal of a claim's reach). Both cases thus stand for the proposition that even claim amendments directly relating to patentability do *not* foreclose all resort to the doctrine of equivalents.

2. The Majority Did Not And Cannot Distinguish This Court's Prior Cases.

The majority dismissed the import of *Goodyear* by asserting that "[t]he Court did not discuss prosecution history estoppel, but simply decided that under the language of the reissued patent celluloid was not equivalent to 'hard rubber vulcanite or its equivalent.'" Pet. App. 17a. The absence of the phrase "prosecution history estoppel" in *Goodyear*, however, does not alter the substance of the Court's reasoning. The salient fact is that, even though the patentee had amended his claim to recite "hard rubber, *i.e.*, vulcanite," the Court expressly indicated that the patentee might be entitled to enforce the patent against substances "*other than* rubber." This statement cannot be reconciled with the majority's view that no range of equivalents is available for an amended claim. Moreover, as Judge Michel explained, Pet. App. 79a (Michel, J., concurring-in-part, dissenting-in-part), the precursor phrase "file wrapper estoppel" first appeared in *Exhibit Supply Co.* v. *Ace Patents Corp.*, 315 U.S. 126 (1942), a case that cites *Goodyear* as the first in a line of cases establishing the estoppel doctrine. *Id.* at 137. Thus, this Court itself has recognized that *Goodyear* applied the concept of prosecution history estoppel, and it plainly did so in a flexible manner.

The majority's attempt to distinguish *Hurlbut* also fails. Because the claim at issue recited the element of "'tar-paper, or its equivalent,'" the majority concluded that this Court found literal infringement, not infringement by equivalence. Pet. App. 17a. But this Court quoted *Schillinger* v. *Greenway Brewing Co.*, 17 F. 244 (C.C.N.D.N.Y. 1883), which explained that the equivalence lay not in the types of materials (*i.e.*, that a trowel was equivalent to tar-paper), but

in the *types of separation*. The specification made clear that the tar-paper was *permanently* interposed. See *Hurlbut*, 130 U.S. at 462 (quoting specification). The *Greenway Brewing* court explained, however, that "'the interposition of the trowel, *though temporary*, was an equivalent for the tar-paper, *even though the joint was left open after the trowel was removed.*'" *Id.* at 467 (quoting *Greenway Brewing Co.*). Thus, in stating that it would be improper "[t]o limit the patent to the *permanent* interposition of a material equivalent to tar-paper," *id.* at 465, this Court endorsed the finding that the defendant's temporary separation was equivalent to the permanent separation claimed. This Court thus applied the doctrine of equivalents despite an express disclaimer concerning the claim's scope.

In short, the reasoning in both cases, and the holding in *Hurlbut*, reflect this Court's recognition that a range of equivalents may be available for an amended claim element. For this reason alone, the majority's complete bar rule should be rejected.

B. Notice And Certainty Have Not Recently Become Paramount Goals Of The Patent Laws.

Unable to distinguish this Court's prior decisions, the majority below implied that an intervening change in the law has robbed them of controlling effect. Contrary to the majority's claim, however, notice and certainty have not recently become paramount interests under the patent laws. This Court has recognized the importance of notice and certainty for over a century, and that recognition co-existed with, rather than displaced, the recognized importance of the doctrine of equivalents. Moreover, in its most recent overhaul of the patent laws, Congress promoted patent protection at the expense of notice.

1. This Court Long Ago Recognized The Importance Of Notice And Certainty.

The majority below claimed that, during the past 20 years, "the notice function of patent claims has become paramount, and the need for certainty . . . has been emphasized." Pet. App. 24a. Yet, from the dawn of the doctrine of equivalents itself, this Court has recognized that notice and certainty are important interests under the patent laws. In *Winans* v. *Denmead*, 56 U.S. (15 How.) 330 (1853), this Court adopted the doctrine over a vigorous dissent warning that deviation from the language a patentee uses to specify his invention would give rise to uncertainty "productive of oppressive and costly litigation, of exorbitant and unjust pretensions and vexatious demands." *Id.* at 347 (Campbell, J., dissenting). The "public interest" required "[f]ulness, clearness, exactness, preciseness, and particularity, in the description of the invention," the dissent argued, so that others may know the "restraints . . . th[e] patent impose[s]" and "industry . . . may freely exert itself." *Id.* These, of course, are precisely the same concerns that the majority cited below. Pet. App. 28a-29a; see also Chisum, *supra* at 10 (noting that the "debate in *Winans* has a remarkably contemporary tone").

Similarly, shortly after passage of the Consolidated Patent Act of 1870, ch. 230, 16 Stat. 198, with its express requirement that patentees "particularly point out and distinctly claim" their inventions, *id.* § 26, 16 Stat. at 201, this Court emphasized the notice function of claims and the importance of certainty. In the seminal case of *Merrill* v. *Yeomans*, 94 U.S. 568 (1876), this Court stated that the "distinct and formal claim is . . . of primary importance[] in the effort to ascertain precisely what it is that is patented." *Id.* at 570. "The growth of the patent system in the last quarter of a century," the Court explained, "has reached a stage in its progress where the variety and magnitude of the interests involved require accuracy, precision, and care in the preparation of all the papers on which the patent is founded."

Id. at 573. Expressly referring to the concept of "fair notice," the Court stated that "[t]he public should not be deprived of rights supposed to belong to it, without being clearly told what it is that limits these rights," and that other inventors "should not be restrained by vague and indefinite descriptions of claims in existing patents from the salutary and necessary right of improving on that which has already been invented." *Id.*

This emphatic recognition, which was repeated in numerous subsequent cases,[7] co-existed with, rather than displaced, this Court's continued reliance on the doctrine of equivalents. See, *e.g.*, *Goodyear*, 102 U.S. at 230 (noting, just three years after *Merrill*, that a patentee is "protected against equivalents for any part of his invention"). Indeed, nearly 75 years after *Merrill*, this Court re-affirmed the validity and necessity of the doctrine in *Graver Tank*. It did so, moreover, over another vigorous dissent that reiterated the themes announced a century earlier in the *Winans* dissent, and that the majority below would endorse as "paramount" half a century later. See 339 U.S. at 617 (Black, J., dissenting) (warning that "judicial expansion of precise patent claims" "sets the stage" for exorbitant demands, and exposes manufacturers to "the peril of heavy infringement damages").

As this history makes clear, the fact that notice and certainty are important interests under the patent system is not a recently discovered truth. This Court has long recognized the importance of these interests. Unlike the majority, however, this Court has also recognized that these interests must be balanced against the need for meaningful patent protection in order to achieve the patent law's truly paramount goal of promoting innovation.

---

[7] *See, e.g.*, *White* v. *Dunbar*, 119 U.S. 47, 51-52 (1886); *General Electric Co.* v. *Wabash Appliance Corp.*, 304 U.S. 364, 369 (1938); *Union Carbon Co.* v. *Binney & Smith Co.*, 317 U.S. 228, 236 (1942).

2. In Its 1952 Amendments To The Patent Statute, Congress Favored Patent Protection Over Notice And Certainty.

In its 1952 amendments to the patent laws, Congress did not deem notice paramount or excessively emphasize the importance of certainty. To the contrary, in at least one significant respect, Congress favored patent protection over notice and certainty.

As this Court recognized in *Warner-Jenkinson*, Congress enacted the so-called "means" claiming provision of the 1952 Patent Act, 35 U.S.C. § 112, ¶ 6, to overturn the decision in *Halliburton Oil Well Cementing Co.* v. *Walker*, 329 U.S. 1 (1946). That case had "rejected claims that 'do not describe the invention but use "conveniently functional language at the exact point of novelty."'" *Warner-Jenkinson*, 520 U.S. at 27 (quoting *Halliburton*, 329 U.S. at 8). *Halliburton* itself followed the decision in *General Electric Co.* v. *Wabash Appliance Corp.*, 304 U.S. 364 (1938), quoting the phrase "'conveniently functional language at the exact point of novelty'" from this earlier case. See *Halliburton*, 329 U.S. at 8 (quoting *Wabash*, 304 U.S. at 371). *Wabash*, in turn, made clear that the flaw in "means" claiming language is that it does not provide adequate notice of the invention claimed. The *Wabash* Court stressed that "[t]he limits of a patent must be known" in order to "guard against unreasonable advantages to the patentee and disadvantages to others arising from uncertainty as to their rights." 304 U.S. at 369. Patented inventions, the Court explained, "require precise descriptions of the new characteristics for which protection is sought." *Id.* "Means" claims violated these requirements by failing to "convey[] definite meaning to those skilled in the art." *Id.* at 372.

In overturning *Halliburton*, therefore, Congress permitted claims that this Court had condemned because they allegedly failed to apprise the public of the scope of the claimed invention. In doing so, Congress expressly stated that

"means" claims covered means disclosed in the specification "and equivalents thereof." 35 U.S.C. § 112, ¶ 6. Thus, Congress plainly chose to promote the protection of patentees over the interests served by notice and certainty. Indeed, the 1954 commentary of Patent Examiner P.J. Federico, upon which this Court relied in *Warner-Jenkinson*, see 520 U.S. at 28, explains that § 112, ¶ 6 was adopted to ensure "some measure of greater liberality in the use of functional expressions in combination claims," and that this represented an "enlargement" of claims. *Commentary on the New Patent Act*, 75 J. Pat. & Trademark Off. Soc'y 161, 186 (1993) (1954).

3. This Court's Recent Decisions Demonstrate That Notice And Certainty Are Not The "Paramount" Aims Of The Patent Laws.

Finally, this Court's most recent decisions in no way rendered notice and certainty "paramount." To be sure, both *Warner-Jenkinson* and *Markman* v. *Westview Instruments, Inc.*, 517 U.S. 370 (1996), refer to the notice function of claims and the importance of certainty. But these references, like comparable references in many cases before *Graver Tank*, are fully consistent with continued recognition of the importance of the doctrine of equivalents.

Indeed, in *Warner-Jenkinson* itself, this Court confirmed that notice and certainty are *not* the primary objectives of the patent laws. The Court considered, and rejected, no fewer than three proposed bright line limitations on the doctrine of equivalents. Specifically, the Court rejected the proposed rules that equivalents must be disclosed in the specification, 520 U.S. at 37, that equivalents must be known at the time the patent issues, *id.*, and that prosecution history estoppel applies to all amendments regardless of the reason for the amendment. *Id.* at 30-33. With respect to the latter rule, the Court explained that the fact that a "rule might provide a brighter line for determining whether a patentee is estopped under certain circumstances *is not a sufficient reason for*

adopting such a rule." *Id.* at 33 n.6. In language fully applicable to the complete bar rule, the Court emphasized that the prosecution of all extant patents may have been conducted in reliance on a flexible approach to estoppel, and that, "[t]o change so substantially the rules of the game now could very well subvert the various balances the PTO sought to strike when issuing the numerous patents which have not yet expired." *Id.*

Similarly, in creating a rebuttable presumption that unexplained amendments were made for substantial reasons related to patentability, this Court necessarily countenanced some uncertainty concerning the scope of amended patent claims. The Court adopted this presumption because of the notice and definitional functions of claims. *Id.* at 33. Yet, it contemplated that the reason for unexplained amendments – *i.e.*, those for which no explanation can be found in the record before the PTO – could be developed at an evidentiary hearing. See *id.* at 34 (noting patentee's possible need for a "further opportunity to establish such reasons"); *id.* at 41-42 (Ginsburg, J., concurring) (contemplating evidentiary showing despite the fact that the PTO never recorded the reasons for an amendment).[8] Until such reasons are adduced, however, competitors cannot be certain of the reason for an amendment or the scope of the surrender it effected.

In short, while this Court recognized the importance of notice and certainty and expressed concern over unbridled application of the doctrine of equivalents, *id.* at 28-29, it consistently rejected rigid bright line rules that would have categorically precluded resort to the doctrine of equivalents.

---

[8] The majority's insistence that the reason for an amendment appear in the file wrapper completely undermines this Court's presumption. If a reason appears in the record before the PTO, the amendment is not "unexplained." The presumption only applies "where the record seems *not* to reveal the reason for" the amendment, 520 U.S. at 33. Yet in that circumstance, the majority has barred the introduction of evidence, thereby ensuring that the presumption cannot be rebutted.

C. The Flexible Bar Approach Is Not Unworkable.

Even if it were not bound by this Court's prior use of the flexible bar rule – and plainly it was – the court below still had no basis for jettisoning a flexible bar as "'unworkable.'" Pet. App. 25a. In fact, the flexible bar involves a straightforward, practical inquiry that courts and competitors can and do readily perform. That the outcome of individual cases under such an approach turns on the facts of each case does not establish that the approach is unworkable.

1. The Flexible Approach Involves A Straightforward And Practical Inquiry.

As the decisions in *Goodyear* and *Hurlbut* illustrate, the flexible approach to prosecution history estoppel involves determining whether the patentee surrendered subject matter when amending a claim and, if so, the extent of the surrender. The scope of subject matter surrendered is logically and appropriately analyzed under estoppel principles. Those principles, however, apply with different force depending upon whether an amendment is made to overcome prior art objections (which always implicate the scope and patentability of the claimed invention) or enablement and indefiniteness objections (which typically do not).

Faced with an examiner's assertion that the breadth of a claim renders it invalid in light of prior art and that the claim must therefore be narrowed, the applicant can either contest the examiner's assertion by administrative appeal or acquiesce. If the applicant acquiesces, a person of skill in the art would understand the applicant to have conceded that the art was material and invalidating. Accordingly, once the patent issues the patentee is properly "estopped" from claiming that an accused product or process that employs a structure or method disclosed in the cited prior art is an infringing equivalent of the narrowed claim element. By acquiescing in the objection, the patentee has conceded that

the claim is valid because the narrowed element is different from the structures or methods disclosed in the cited art.

As the United States has explained, however, amendments made to overcome enablement or indefiniteness objections stand on a different footing:

> The purpose of the enablement requirement is not to limit the scope of the patent right, but to ensure that the invention has been fully disclosed so that, upon the patent's expiration, the public can practice the invention. Similarly, "when claim changes or arguments are made in order to more particularly point out the applicant's invention, the purpose is to impart precision. . . . Such prosecution is not presumed to raise an estoppel, but is reviewed on its facts . . . ."

US *Warner-Jenkinson* Br. at *22 (quoting *Pall Corp.* v. *Micron Separations, Inc.*, 66 F.3d 1211, 1220 (Fed. Cir. 1995)). In such cases, the proper inquiry is whether a person of ordinary skill in the art would understand an amendment made for reasons of enablement or specificity to constitute a surrender of patentable subject matter.[9] Two examples illustrate how this practical inquiry is made.

Suppose an applicant invents a novel device for sensing and responding to light, and drafts a broad claim reciting, among other things, "a light sensor." The examiner objects that this element is not enabled because the specification only discloses a visible light sensor, not one capable of sensing ultraviolet light. If the applicant responds by narrowing the

---

[9] Because the "[s]tatute and case law regarding novelty, obviousness and enablement require that the examiner (and the courts) use the perspective of a hypothetical person of ordinary skill in determining patentability, . . . consistency requires that this perspective . . . should govern estoppel as well." Ted Apple, *Enablement Estoppel: Should Prosecution History Estoppel Arise When Claims Are Amended to Overcome Enablement Rejections?*, 13 Santa Clara Computer & High Tech. L.J. 107, 126 (1997) (footnotes omitted).

claim to "a *visible* light sensor," rather than challenging the rejection, a person of skill in the art would reasonably conclude that the applicant's invention did not encompass an ultraviolet light sensor. If it did, the applicant could have drafted the specification to disclose such a sensor, and in fact would have had strong incentives to do so if such means had not previously existed in the context of the invention. In light of this history, the patentee should be estopped from claiming that a device that senses ultraviolet light is equivalent to the claimed visible light sensor.

By contrast, suppose an applicant seeks a patent for the invention of storing telephone call routing information in centralized databases, rather than in local telephone switches where such information has previously been stored. The applicant claims a method in which local switches send queries to a central database for the appropriate routing information and, as part of the claim, includes the step of "sending such queries over a data network." The examiner objects on enablement grounds because the specification discloses a particular type of data network, which is the only one in existence at the time of the application. The applicant amends the claim to recite the particular type of network. A person of skill in the art could not reasonably conclude from this history that the patentee had disclaimed sending queries over later-developed data networks. The applicant could not have been expected to predict how such networks would later evolve. See US *Warner-Jenkinson* Br. at *23 n.7 ("when an accused equivalent . . . could not have been known because it was developed or discovered only after the patent issued, the case for application of the doctrine of equivalents becomes especially clear").

Similarly, if two interchangeable data networks existed at the time of the application, and the applicant amended the claim to specify only one in response to an enablement objection, a person of skill in the art would not reasonably conclude that the applicant had disclaimed use of the other

known network. The applicant had every reason to assume that the interchangeability of the other network would be known to others skilled in the art and would be captured as an infringing equivalent. The applicant thus had no reason to incur the expense and delay of an administrative appeal to challenge the erroneous enablement objection, and any failure to do so would not reasonably be viewed as a concession, contrary to obvious fact, that the unclaimed network was not equivalent to the one claimed. Thus, as the United States has explained, the failure "to specify or to claim all known equivalents . . . should not necessarily estop [a patentee] from obtaining protection under the doctrine of equivalents." *Id.* at *23.

In short, the inquiry surrounding the surrender of subject matter is a practical one, guided by the well-established perspective of those skilled in the art. As *amici* explain next, there is nothing unworkable about such a standard.

2. This Straightforward And Practical Inquiry Is Not Unworkable.

In abandoning the flexible bar approach adopted in *Hughes Aircraft Co.* v. *United States*, 717 F.2d 1351 (Fed. Cir. 1983), the majority misapprehended the standard of "unworkability" that justifies deviations from *stare decisis*. Although *stare decisis* is "not an inexorable command," *Payne* v. *Tennessee*, 501 U.S. 808, 828 (1991), adherence to precedent is "a cardinal and guiding principle," *California* v. *FERC*, 495 U.S. 490, 499 (1990). *Stare decisis* applies with particular force here, where the judicial doctrine at issue is derived from and implements statutory standards of patentability, and Congress is free to modify that doctrine at any time. See *Patterson* v. *McLean Credit Union*, 491 U.S. 164, 172 (1989) ("[c]onsiderations of *stare decisis* have special force in the area of statutory interpretation"). Indeed, "[c]onsiderations in favor of *stare decisis* are at their acme" in this case, which involves property rights developed in reliance on judicial precedent. *Payne*, 501 U.S. at 828.

As this Court has explained, statutory precedent may not be abandoned unless "intervening development of the law" has "removed or weakened the conceptual underpinnings from the prior decision" or "rendered the decision irreconciliable with competing legal doctrines." *Patterson*, 491 U.S. at 173. In upsetting significant property interests predicated on statutory precedent, the majority below made no such findings, nor could it have done so. The flexible bar rule is simply an extension of the doctrine of equivalents, a doctrine just recently re-affirmed by this Court that rests on the empirically confirmed recognition that adequate patent protection is essential to innovation. See *supra* at 9-10. The conceptual underpinnings of the flexible bar rule thus remain as strong as ever. Nor is the rule "irreconcilable" with the policies of notice and certainty. Rather, this Court has long recognized that the rule can and must co-exist with these policies in order to promote innovation.

Unable to make the requisite findings, the majority cited the "difficulty under the flexible bar approach in predicting with any degree of certainty the scope of surrender that will be found when prosecution history estoppel applies." Pet. App. 25a. This supposed difficulty does not justify abandoning a settled rule of law. There is always a degree of uncertainty in predicting the outcome of individual cases under legal standards, such as the standard of reasonable care, that turn on fact-specific inquiries.

More fundamentally, the uncertainty the majority deems "unworkable" is not a function of the flexible bar approach, but of the doctrine of equivalents itself. This is illustrated by the majority's example of a claim that originally recites "a value 'less than twenty,'" but is amended to recite "a value 'less than five'" in light of prior art disclosing a value of fifteen. Pet. App. 28a-29a. According to the majority, it is "impossible" to determine whether a value of fourteen is equivalent to the claimed value of five. *Id.* at 29a. The uncertainty, however, would be identical if a never-amended

claim recited a value of five and was asserted against a value of fourteen.

Thus, the majority's "determination" that a flexible bar approach is "unworkable" is nothing less than a charge that the doctrine of equivalents itself is "unworkable."[10] This Court, however, rejected that argument when it upheld the doctrine in *Warner-Jenkinson*. The majority's claim that the availability of the doctrine of equivalents for amended claims "'poses a direct obstacle to the realization of important objectives,'" Pet. App. 26a (quoting *Patterson*, 491 U.S. at 173), is thus foreclosed by controlling precedent. It is also wrong: the doctrine is essential to, not a "direct obstacle" to, the goal of fostering innovation. See *supra* at 7-11.

Nor is the uncertainty as great as the majority contends. Contrary to the majority's claim, there is in fact a "metric to determine what subject matter was given up" by amendment. Pet. App. 28a. It is the understanding that a person of ordinary skill in the art would have based on the prosecution history. The fact that courts have long used this precise perspective to determine the validity of patents, see *supra* at 22 & n.9, confirms that an estoppel standard employing this same perspective does not entail an unworkable degree of uncertainty.

In short, the majority's dramatic alteration of the balance between meaningful patent protection and fair notice – and its equally dramatic dilution of significant property interests developed in reliance on that balance – was unjustified.

---

[10] Judge Plager acknowledges this fact, explaining that it is the "insubstantial differences" test of equivalence that is "unworkable." *See* Pet. App. 61a-62a (Plager, J., concurring) ("the decision on equivalence remains essentially a subjective call. . . . This to me is the antithesis of the rule of law.").

III. ANY ADJUSTMENT IN THE BALANCE BETWEEN MEANINGFUL PROTECTION AND FAIR NOTICE IS FOR CONGRESS TO MAKE.

If there is to be an adjustment in the balance this Court has long struck between meaningful patent protection and fair notice, it should be made by Congress, not the courts.

Although the doctrines of equivalents and prosecution history estoppel are judge-made, Congress necessarily incorporated these doctrines in the 1952 Patent Act. *Graver Tank* was decided in 1950. Not only is Congress presumed to have been aware of this Court's then-recent determination that the doctrine of equivalents was consistent with statutory claiming requirements, see *Lorillard* v. *Pons*, 434 U.S. 575, 581 (1978), the doctrine was explicitly raised during consideration of the 1952 Act in connection with the permissibility of so-called means-plus-function claims. See *Patent Law Codification and Revision: Hearings on H.R. 3760 before Subcomm. No. 3 of the House Comm. on the Judiciary*, 82d Cong. 95 (1951) (Testimony of T. Brown, Chief, Patent Litigation Unit, Claims Division, Department of Justice) (noting that proposed § 112, ¶ 6 "introduces into the statute for the first time the controversial doctrine of equivalents"). Thus, as this Court has previously recognized, Congress "left intact the entire body of [pre-1952] case law on direct infringement," including infringement by equivalents. *Aro Mfg. Co.* v. *Convertible Top Replacement Co.*, 365 U.S. 336, 342 (1961).

Similarly, Congress must be understood to have implicitly endorsed the pre-1952 balance this Court struck between meaningful patent protection and fair notice. In this regard, it is noteworthy that Congress fine-tuned the balance between the rights of inventors and competitors. Most notably, it permitted "means" claiming that this Court had condemned as insufficiently precise to afford adequate notice of claimed inventions. See *supra* at 18-19. In addition, Congress overruled several decisions strictly construing the standards

of novelty in order to introduce an "attitude more favorable to patents." Federico, *supra* at 183. In light of this careful and nuanced congressional attention to the proper balance between the rights of inventors and competitors, the courts are not at liberty to introduce significant new limitations on the availability of the doctrine of equivalents, or to alter in any significant manner a balance between competing interests that Congress has approved. Cf. *Square D Co.* v. *Niagara Frontier Tariff Bureau, Inc.*, 476 U.S. 409, 420 (1986).

Congress posssesses far greater institutional competence and experience than the courts to make any adjustments to that balance. The availability of the doctrine of equivalents bears significantly on the economic incentives that drive investment in research and development efforts. Those investments, in turn, affect the nation's economy. Thus, restrictions on the availability of the doctrine of equivalents implicate fundamental issues of industrial policy. Such issues, of course, lie outside the competence of the judiciary, and are properly entrusted to the political branches.

In fact, just six years after passing the 1952 Patent Act, Congress studied the role of patents in stimulating invention and the impact of patent protection on research and development efforts.[11] More recently, Congress has considered bills that would have adjusted patent protections in specific industries, such as biotechnology.[12] Unlike courts, Congress can conduct investigations into these and related subjects, which call for empirical study, and it can adopt carefully tailored changes that alter investment incentives in

---

[11] *See* Subcomm. on Patents, Trademarks, and Copyrights, Senate Comm. on the Judiciary, 85th Cong., *An Economic Review of the Patent System: Study No. 15* (Comm. Print 1958), and *The Impact of the Patent System on Research: Study No. 11* (Comm. Print 1958).

[12] *See, e.g.*, Biotechnology Patent Protection Act of 1991, H.R. 1417, 102d Cong. (1991); Patent Competitiveness and Technological Innovation Act, H.R. 5598, 101st Cong. (1990).

particular industries or fields of study. Similarly, Congress can study the impact of a complete bar rule, the number of patents it will affect, the extent to which it will upset settled expectations and the nature of those expectations, and its likely effect on current and future investment decisions. For all of these reasons, any adjustment in the longstanding balance between meaningful patent protection and fair notice can and should be made by Congress alone.

CONCLUSION

For all of the foregoing reasons, the Court should reverse the lower court's ruling that all claim amendments relating in any way to patentability foreclose resort to the doctrine of equivalents for any amended claim element.

Respectfully submitted

GARY L. GRISWOLD
KEVIN H. RHODES
MINNESOTA MINING AND MANUFACTURING COMPANY
P.O. Box 33427
St. Paul, MN 55133-3427
(651) 733-8904

CARTER G. PHILLIPS*
JOSEPH R. GUERRA
MARK E. HADDAD
SIDLEY AUSTIN BROWN & WOOD
1501 K Street, N.W.
Washington, D.C. 20005
(202) 736-8000

ROBERT A. ARMITAGE
ELI LILLY AND COMPANY
Lilly Corporate Center
Indianapolis, IN 46285

WAYNE C. JAESCHKE
HENKEL CORPORATION
2200 Renaissance Blvd.
Gulph Mills, PA 19406

PHILIP S. JOHNSON
JOHNSON & JOHNSON
One Johnson & Johnson Plaza
New Brunswick, NJ 08933

PETER C. RICHARDSON
LAWRENCE C. AKERS
PFIZER INCORPORATED
235 East 42nd Street
New York, NY 10017

JOHN K. WILLIAMSON
LINDA PINGITORE
PPG INDUSTRIES, INC.
One PPG Place
Pittsburgh, PA 15228

MARY J. SCHNURR
REXAM BEVERAGE CAN COMPANY
8770 W. Bryn Mawr Ave.
Chicago, IL 60631

LEONARD CHARLES SUCHYTA
VERIZON COMMUNICATIONS INC.
1095 Avenue Of The Americas
New York, NY 10036

KEN OLSON
SUN MICROSYSTEMS, INC.
901 San Antonio Rd.
Palo Alto, CA 94303

Counsel for Amici Curiae

August 31, 2001

* Counsel of Record

AUG 31 2001

(41)

Supreme Court, U.S.
FILED
AUG 31 2001
CLERK

No. 00-1543

CORRECTED COPY

IN THE

Supreme Court of the United States

FESTO CORPORATION,

Petitioner,

v.

SHOKETSU KINZOKU KOGYO KABUSHIKI CO., LTD., a/k/a SMC CORPORATION and SMC PNEUMATICS, INC.,

Respondents.

ON WRIT OF CERTIORARI TO THE UNITED STATES COURT OF APPEALS FOR THE FEDERAL CIRCUIT

BRIEF OF THE INSTITUTE OF ELECTRICAL AND ELECTRONICS ENGINEERS – UNITED STATES OF AMERICA AS AMICUS CURIAE IN SUPPORT OF NEITHER PARTY

ANDREW C. GREENBERG
Counsel of Record
MATTHEW J. CONIGLIARO
C. DOUGLAS MCDONALD
CARLTON FIELDS, P.A.
777 S. Harbour Island Blvd.
Tampa, Florida 33602
(813) 223-7000

Attorneys for Amicus Curiae Institute of Electrical and Electronics Engineers – United States of America (IEEE-USA)

36 pp

RECEIVED
SEP 0 7 2001
LIBRARY SERVICES

TABLE OF CONTENTS

	Page
TABLE OF CITED AUTHORITIES	iii
INTEREST OF AMICUS CURIAE	1
INTRODUCTION AND SUMMARY OF ARGUMENT	3
ARGUMENT	4
I. The Progress Of The Useful Arts Is Not Adequately Promoted Under Either The Absolute Bar Or Flexible Bar Rules Advanced By The Parties.	4
A. Inventors Contribute to Progress Through Both Pioneering Inventions And Technological Improvements.	5
B. Patent Law Should Balance the Protective And Notice Functions And Thereby Promote Progress Through Both Pioneering Inventions And Technological Improvements.	8
C. The Absolute Bar And Flexible Bar Approaches To Prosecution History Estoppel Advanced By The Parties Fail To Balance Patents' Protective And Notice Functions And To Encourage Both Pioneer And Incremental Innovations.	12

Contents

Page

II. Application of Prosecution History Estoppel Strikes An Appropriate Balance Of Patent Policies Only When The Limiting Effect Of An Amendment With Respect To An Accused Device Would Have Been Foreseeable At The Time Of The Amendment. 18

A. The Foreseeable Bar Rule Is Consistent With Patent Policies And Harmonizes The Precedent Of This Court And The Federal Circuit. 19

B. The Foreseeable Bar Rule Overcomes the Failings Of The Absolute Bar And The Flexible Bar. 23

CONCLUSION 29

TABLE OF CITED AUTHORITIES

Page

Cases:

Bloomer v. McQuewan, 55 U.S. (14 How.) 539 (1852) 8

Bonito Boats, Inc. v. Thunder Craft Boats, Inc., 489 U.S. 141 (1989) 9

Emerson v. Davies, 8 F. Cas. 615 (C.C.D. Mass. 1845) 7

Exhibit Supply Co. v. Ace Patents Corp., 315 U.S. 126 (1942) 10, 22

Graham v. John Deere Co., 383 U.S. 1 (1966) 5

Graver Tank & Mfg. Co. v. Linde Air Products Co., 339 U.S. 605 (1950) 10, 16, 20

Hadley v. Baxendale, 156 Eng. Rep. 145 (1854) .. 19

Hughes Aircraft Co., v. United States, 717 F.2d 1351 (Fed. Cir. 1983) ..... *passim*

Kewanee Oil Co. v. Bicron Corp., 416 U.S. 470 (1974) 8

Kinzenbaw v. Deere & Co., 741 F.2d 383 (Fed. Cir. 1984) 15, 20, 22

Cited Authorities

	Page
Markman v. Westview Instruments, Inc., 517 U.S. 370 (1996)	9, 14, 21
Mazer v. Stein, 347 U.S. 201 (1954)	5
McLain v. Ortmayer, 141 U.S. 419 (1891)	9
Palsgraf v. Long Island R.R.. Co., 162 N.E. 99 (N.Y. 1928)	19
Parkland Hosiery Co. v. Shore, 439 U.S. 322 (1979)	20
Prodyne Enterprises, Inc. v. Julie Pomerantz, 743 F.2d 1581 (Fed. Cir. 1984)	18
Rite-Hite Corp. v. Kelley Co., Inc., 56 F.3d 1538 (Fed. Cir. 1995)	19
Sage Products v. Devon Industries, 126 F.3d 1420 (Fed. Cir. 1997)	21, 22, 24
Slimfold Mfg. Co. v. Kinkead Indus. Inc., 932 F.2d 1453 (Fed. Cir. 1991)	6
Sony Corp. v. Universal City Studios, Inc., 464 U.S. 417 (1984)	6
Union Carbon Co. v. Binney & Smith Co., 317 U.S. 228 (1942)	14

Cited Authorities

	Page
Warner-Jenkinson Co., Inc. v. Hilton Davis Chem. Co., 520 U.S. 17 (1997)	6, 10, 16, 28
Westinghouse v. Boyden Power Brake Co., 170 U.S. 537 (1898)	5
White v. Dunbar, 119 U.S. 47 (1886)	11
Winans v. Denmead, 56 U.S. (15 How.) 330 (1854)	10, 16
United States Constitution:	
U.S. CONST. Art. I, § 8, cl. 8	4
Statutes:	
28 U.S.C. § 1295(a)	12
35 U.S.C. § 112	8
35 U.S.C. § 271(a)	8

Cited Authorities

Page

Other Authorities:

RESTATEMENT (SECOND) OF CONTRACTS § 90 (1981) . 20

Peter F. Lake, *Common Law Duty in Negligence Law*, 34 SAN DIEGO L. REV. 1053 (1997) 19

Robert P. Merges & Richard R. Nelson, *On the Complex Economics of Patent Scope*, 90 COLUM. L. REV. 839 (1990) 11

Mark A. Lemley, *The Economics of Improvement in Intellectual Property Law*, 75 TEX. L. REV. 989 (1997) 8, 11

HENRY PETROSKI, THE EVOLUTION OF USEFUL THINGS 45 (1992) 6

Suzanne Scotchmer, *Standing on the Shoulders of Giants: Cumulative Research and the Patent Law*, 5 J. ECON. PERSP. 29 (1991) 7

BRIEF OF INSTITUTE OF ELECTRICAL AND ELECTRONICS ENGINEERS – UNITED STATES OF AMERICA (IEEE-USA) AS AMICUS CURIAE IN SUPPORT OF NEITHER PARTY[1]

INTEREST OF AMICUS CURIAE

The Institute of Electrical and Electronics Engineers - United States of America (IEEE-USA) promotes the career and technology policy interests of the nearly two hundred and thirty thousand electrical, electronic and computer engineers who comprise its United States membership. IEEE-USA is an organizational unit of The Institute of Electrical and Electronics Engineers, Inc. (IEEE), a New York Corporation. The vision of the IEEE is to advance global prosperity by fostering technological innovation and promoting the engineering community worldwide. The IEEE promotes the engineering process of creating, developing, integrating, sharing and applying knowledge about electronics and information technologies and sciences for the benefit of the profession and humanity.

IEEE-USA members serve on the "front line" of the United States patent system. They are pioneer inventors, inventors of novel improvements and designers of innovative refinements of the state of the art. They are entrepreneurs and employees of firms that acquire, license and exploit the intellectual property assets resulting from those activities. For these reasons, the IEEE-USA is deeply concerned that

1. In accordance with Supreme Court Rule 37.6, IEEE-USA states that this brief was authored in its entirety by the counsel listed on the cover and that counsel to a party did not author this brief in whole or in part. No person or entity other than the amicus curiae and its counsel made a monetary contribution to the preparation or submission of this brief. The consents of the parties are being lodged herewith.

sufficient incentive be given to inventors to innovate without unduly chilling the creation and development of non-infringing technology and improvements.

IEEE-USA members and other engineers routinely advise firms about the relative merit of the state of the art as compared with the merit and risk of competing lines of research and design. That advice, and with it progress itself, will be impacted favorably or adversely, depending on how the nation executes its patent policies.

As an organization dedicated to promoting sound technology and public policy applicable to United States electrical, electronics and computer engineers, the IEEE-USA has a compelling interest in ensuring that legal principles governing patent policy comport with the policies set forth by the Founders. Rules of the patent system intimately affect the practices of and advice given by engineers, and the IEEE-USA respectfully suggests that the patent law doctrines sanctioned by this Court should be rendered so far as possible in a manner that not only promotes progress in the manner intended by the Constitution but that is both comprehensible and practical to the professionals who provide that progress.

By virtue of the practical experience of its members, the IEEE-USA respectfully believes that its views will aid this Court in the resolution of the issues raised in this appeal. In accordance with the by-laws of the IEEE, the IEEE-USA Board of Directors has authorized the filing of this brief.

INTRODUCTION AND SUMMARY OF ARGUMENT

Consistent with the charge of the Patent Clause of the United States Constitution, Congress crafted a patent scheme that promotes the progress of the "useful Arts." The patent instrument designed by Congress seeks to achieve this constitutional end by providing both a protective function to inventors and a notice function to the public. This Court has recognized these fundamental policies on numerous occasions, and the questions presented by this proceeding require the Court to determine how these policies are best effectuated when the judicially created doctrine of equivalents is limited by application of another judicially created doctrine, prosecution history estoppel.

Neither *Festo Corp. v. Shoketsu Kinzoku Kogyo Kabushito Co., Ltd.*, 234 F.3d 558 (Fed. Cir. 2000), nor *Hughes Aircraft Co. v. United States*, 717 F.2d 1351 (Fed. Cir. 1983), define a workable and just framework for balancing patents' protective and notice functions. The IEEE-USA concurs with arguments made by the parties and other amici criticizing the "absolute bar" and "flexible bar" approaches set forth in these cases. The absolute bar of *Festo* improperly treats the notice function of a patent as paramount, severely diluting necessary patent protections and disproportionately encouraging minor variations, or mere copies, over genuine technological improvements and more fundamental, pioneering innovations. The flexible bar of *Hughes*, on the other hand, heightens the protective function in a manner that sacrifices much of the notice function, resulting in uncertainty regarding patented bounds that discourages incremental innovation through technological improvements. Under either rule, progress is not best served.

The IEEE-USA suggests that the flexible bar's deficiencies may be cured without resorting, as the Federal Circuit did below, to the absolute bar. As detailed hereafter, the IEEE-USA strongly recommends that this Court adopt instead a "foreseeable bar," by which the doctrine of equivalents should apply, notwithstanding a limiting amendment during a patent's prosecution, unless the limiting effect of the language with respect to an accused device would have been foreseeable at the time of the amendment. Such a rule is supported by case law from this Court and the Federal Circuit and presents the best means of effectuating patents' protective and notice functions to promote all forms of progress, including both pioneering inventions and technological improvements.

Unlike the flexible and absolute bars, the foreseeable bar is workable. It would be comprehensible to the professionals governed by the Patent Act and readily applied and reviewed by the judiciary. It also avoids the most extreme examples of injustice associated with *Festo* and *Hughes*. Most importantly, it best serves the policies underlying the Patent Clause and the Patent Act by most fully promoting progress of the "useful Arts."

ARGUMENT

I. The Progress Of The Useful Arts Is Not Adequately Promoted Under Either The Absolute Bar Or Flexible Bar Rules Advanced By The Parties.

The Patent Clause broadly directs that the Congress shall have the power to "promote the Progress of . . . useful Arts, by securing for limited Times to . . . Inventors the exclusive Right to their . . . Discoveries." U.S. CONST. Art. I, § 8, cl. 8. Crafting a statutory scheme to achieve this objective is the work of Congress, while enforcing that scheme in the manner

that best comports with congressional intent and constitutional purpose is the obligation of the judiciary. *Graham v. John Deere Co.*, 383 U.S. 1, 5-6 (1966).

The parties to this case present the Court with polar opposite views regarding how limiting amendments made to the claims of a patent during its prosecution affect a patent's scope and, thus, its enforceability. As the Court is aware, the Federal Circuit previously adopted the petitioner's position and has now adopted the respondent's position. In the IEEE-USA's view, neither position adequately fulfills the purposes embodied in both the Patent Clause and the Patent Act, which encourage both technological improvements and pioneering inventions through a careful balance of patents' protective and notice functions.

A. Inventors Contribute to Progress Through Both Pioneering Inventions And Technological Improvements.

The chief aim of the Patent Clause is to promote the public welfare by encouraging advancements in knowledge. *Mazer v. Stein*, 347 U.S. 201, 219 (1954). Innovation generally takes one of two basic forms: pioneering inventions and technological improvements. The Patent Clause and the Patent Act must be viewed to encourage both types of innovation, each of which is critical to the continued advancement of science and, thus, the public good.

A pioneering invention can be defined as something that performs a function never before performed – "a wholly novel device, or one of such novelty and importance as to mark a distinct step in the progress of the art. . . ." *Westinghouse v. Boyden Power Brake Co.*, 170 U.S. 537, 561-62 (1898). By comparison, technological improvements are useful, though often minor, advances over the previously

existing technology. However, even minor changes to prior art may be wholly unobvious before an invention is disclosed and of fundamental importance to the usefulness of an invention. The most useful and novel inventions and improvements may be progressive steps that are, in turn, dependent upon other previous steps of prior invention. HENRY PETROSKI, THE EVOLUTION OF USEFUL THINGS 45 (1992).

Technological improvements may be the result of independent discoveries or intentional efforts to "design around," and thereby avoid the claims of, a patent. In either case, progress is served through innovation. Indeed, unlike copyists, who merely attempt to mimic a device and add nothing to the public body of knowledge, those who invent new devices by intentionally designing around a patent nonetheless advance the public welfare and fulfill the purpose of the Patent Clause. *Warner-Jenkinson Co., Inc. v. Hilton Davis Chem. Co.*, 520 U.S. 17, 36 (1997) (contrasting "the intentional copyist making minor changes to lower the risk of legal action" with "the incremental innovator designing around the claims, yet seeking to capture as much as is permissible of the patented advance."); *see also Slimfold Mfg. Co. v. Kinkead Indus. Inc.*, 932 F.2d 1453, 1457 (Fed. Cir. 1991) (Rich, J.) ("Designing around patents is, in fact, one of the ways in which the patent system works to the advantage of the public in promoting progress in the useful arts, its constitutional purpose.").

Ultimately, whether deemed pioneering inventions or technological improvements, all innovations build upon information already known to the public. All inventors have the fortune of standing on the shoulders of the proverbial giants who preceded them. *See Sony Corp. v. Universal City Studios, Inc.*, 464 U.S. 417, 477-78 & n.28 (1984) (noting, in copyright case, that each person builds on the work of

predecessors); Suzanne Scotchmer, *Standing on the Shoulders of Giants: Cumulative Research and the Patent Law*, 5 J. ECON. PERSP. 29 (1991). As Justice Story explained well over a century ago: in literature, science, and art, there can be few things, if any, that are strictly new and original throughout. *Emerson v. Davies*, 8 F. Cas. 615, 619 (C.C.D. Mass. 1845).

While both rely to some extent on prior discoveries, pioneering inventions and technological improvements differ dramatically in their frequency. The former are relatively uncommon by their nature, which relies on unprecedented, breakthrough discoveries. It is only the rare invention that strikes out in a sufficiently uncharted direction to qualify as a "wholly novel device." Thus, progress largely takes the form of technological improvements.

Technological improvements may be derived from either pioneering inventions or prior technological improvements. When a pioneering invention leads the way into a new art, technological improvements often follow in a flurry, as inventors seek to maximize the pioneering device's utility by building and improving upon its previously unknown advances. It is this flurry of minor innovations that places technological improvements on par with their more revolutionary counterparts, though the social contribution of a technological improvement may on occasion rival that of pioneering inventions. Generally, pioneering advances provide great leaps in society's collective progress, while technological improvements provide the multitudes of incremental steps necessary to realize the full potential of major, as well as minor, discoveries.

Accordingly, both pioneering inventions and technological improvements must be encouraged, to the exclusion of neither. This bedrock principle should guide the Court in interpreting the patent system to promote the progress of the "useful Arts."

B. Patent Law Should Balance the Protective And Notice Functions And Thereby Promote Progress Through Both Pioneering Inventions And Technological Improvements.

All intellectual property law attempts to balance creators' rights to control their creations and society's right to utilize those creations. *See* Mark A. Lemley, *The Economics of Improvement in Intellectual Property Law*, 75 TEX. L. REV. 989 (1997). In the specific context of patent law, this act is carried out, and "Progress" is best promoted, by the careful balancing of the competing patent functions of dynamic protection and notice to the public. Each is fundamental, and it is only by their harmonious interplay that patent law can encourage both technological improvements and pioneering inventions.

The protective function of a patent, the constitutionally mandated right of its holder to exclude all others from practicing the invention for a limited time, is the principal feature of the patent system. *Bloomer v. McQuewan*, 55 U.S. (14 How.) 539, 549 (1852). In a capitalist market, the lure of obtaining a monopoly on a commercially profitable invention induces research, development, and, ultimately, progress in the form of new knowledge. *See Kewanee Oil Co. v. Bicron Corp.*, 416 U.S. 470, 480 (1974). The Patent Act offers this inducement by expressly prohibiting persons other than the patentee from making, using, offering to sell or selling a patented device. 35 U.S.C. § 271(a).

The notice function of a patent requires inventors to disclose a full and clear description of the invention, an enabling disclosure and the "best mode" of carrying it out so that the invention may be made and used by any person skilled in the art. 35 U.S.C. § 112; *Kewanee Oil*, 416 U.S. at 480-81. Patents thus serve to inform the public of the precise

nature of the protected subject matter, placing that knowledge in the public domain subject only to the limited intrusion of the patentee's exclusivity right. *Bonito Boats, Inc. v. Thunder Craft Boats, Inc.*, 489 U.S. 141, 150-51 (1989). Concomitantly, patents notify the public of what subject matter is not claimed in a patent. *McLain v. Ortmayer*, 141 U.S. 419, 424 (1891) ("The object of the patent law in requiring the patentee to [distinctly claim an invention] is not only to secure to him all to which he is entitled, but to apprise the public of what is still open to them."). Thus, patent disclosure enriches the public domain through a useful description of the invention, and patent claims provide subsequent inventors with a description of the subject matter that lies within and without the exclusive possession of the patent holder.

The protective and notice functions of patents exist in some tension. The scope of the patent is defined by its descriptive, written claims. *Markman v. Westview Instruments, Inc.*, 517 U.S. 370 (1996). These claims are solely within the patentee's command, but a competing inventor can avoid literal infringement by developing a new device that distinguishes the patented invention through slight modifications to its claims. Because the language of claims can never perfectly describe an invention or anticipate all the ways in which it might be modified, patents' protective function calls for claims to be read broadly. This prevents insubstantial modifications from escaping a patent's scope of exclusivity. At the same time, the notice function calls for claims to be read in a manner narrow enough to give meaningful effect to the limiting nature of the patentee's chosen language. These respective ends are achieved, or at least furthered, by two competing, judicially-created doctrines: the doctrine of equivalents and prosecution history estoppel.

First recognized by this Court in *Winans v. Denmead*, 56 U.S. 330 (1854), and expounded upon by the Court in *Graver Tank & Mfg. Co. v. Linde Air Products Co.*, 339 U.S. 605 (1950), the doctrine of equivalents holds that a product or process that does not literally infringe on a patented device may be found to infringe if the accused device is found to embody a substantial equivalent of the patented device. The concept of equivalence protects a patent's value by enlarging the patent's scope to encompass devices whose variations from the patent's literal language are insubstantial. Recently, in *Warner-Jenkinson Co. Inc. v. Hilton Davis Chemical Co.*, 520 U.S. 17 (1997), this Court reaffirmed the validity of the doctrine of equivalents, while at the same time seeking to cabin its reach within reasonable bounds by limiting the doctrine's application to elements of an invention's individual claims, rather than the invention as a whole. *Id.* at 29-30. This Court also noted that the doctrine of equivalents, when applied broadly, conflicts with patents' notice function. *Id.* at 29 ("[t]here can be no denying that the doctrine of equivalents, when applied broadly, conflicts with the definitional and public-notice functions of the statutory claiming requirement").

Prosecution history estoppel limits the doctrine of equivalents by preventing a patentee from arguing equivalents with respect to subject matter the patentee surrendered during prosecution of the patent. *Warner-Jenkinson*, 520 U.S. at 30-31; *Exhibit Supply Co. v. Ace Patents Corp.*, 315 U.S. 126, 135-37 (1942). The doctrine of prosecution history estoppel ensures that, to the extent possible, patents mean what they say. It prohibits patentees from obtaining a patent by representing to the United States Patent and Trademark Office that the patent's scope is narrow, and then arguing otherwise to a court. Prosecution history estoppel is consistent with the notice function of

patents because it allows third parties to rely on the public record of the patent prosecution. *Cf. White v. Dunbar*, 119 U.S. 47, 51 (1886) (patent claims may not be treated "like a nose of wax, which may be turned and twisted in any direction").

Application of these doctrines in a manner that elevates either the protective function or the notice function above the other directly affects the incentives, and disincentives, to innovate. Where the balance is tilted toward the protective function, patentees receive exclusivity beyond the literal language of their patents' claims, but inventors have less notice of an existing patent's scope. The resulting uncertainty discourages technological improvements because the outer margins of a patent's claims remain undefined, and the risk of infringing through a device that is found to encompass not a patent's literal claims but their substantial equivalents is not quantifiable. *See* Robert P. Merges & Richard R. Nelson, *On the Complex Economics of Patent Scope*, 90 COLUM. L. REV. 839 (1990) (warning that an overbroad doctrine of equivalents can stifle improvement); Mark A. Lemley, *The Economics of Improvement in Intellectual Property Law*, 75 TEX. L. REV. 989 (1997) (same).

Where the balance tilts too far toward the notice function, a near opposite problem occurs. A patent's scope is so well defined in connection with the literal language of its claims that the patentee lacks protection from insubstantial modifications that amount to little more than a fraud on the patent. The incentive to advance knowledge only slightly, if at all, becomes great, given the heightened certainty that modestly modified devices will not infringe. At the same time, the value of pioneering inventions, along with the incentive to produce them, is substantially diminished by would-be inventors' concerns that their rights will be

immediately diluted in the marketplace by competitors who have made, at best, insubstantial changes and, at worst, mere copies.

In sum, enforcing the doctrine of equivalents and prosecution history estoppel in a manner that balances patents' protective and notice functions is the optimal means of effectuating the constitutional command to promote the useful arts. Only through a careful balance of these functions will inventors be encouraged to innovate through both pioneering inventions and technological improvements.

C. The Absolute Bar And Flexible Bar Approaches To Prosecution History Estoppel Advanced By The Parties Fail To Balance Patents' Protective And Notice Functions And To Encourage Both Pioneer And Incremental Innovations.

Sitting en banc, and openly cognizant of its role under 28 U.S.C. § 1295(a) as the nation's exclusive court of appeal for patent matters, the Federal Circuit in *Festo Corp. v. Shoketsu Kinzoku Kogyo Kabushiki Co., Ltd.*, 234 F.3d 558 (Fed. Cir. 2000), substantially modified the law regarding the consequences attendant to the application of prosecution history estoppel. In doing so, the Federal Circuit rejected its own prior view of the estoppel's effects, thereby overruling a series of Federal Circuit cases dating back to *Hughes Aircraft Co. v. United States*, 717 F.2d 1351 (Fed. Cir. 1983).

The parties and the amici who participated at the jurisdictional stage of the instant proceeding voiced thoroughly divergent views regarding the correctness of the Federal Circuit's change in position. Those supporting the decision believe that the manner of applying prosecution history estoppel under *Hughes* and its progeny is unworkable in light of the realities of modern litigation practice. Those

supporting the prior rule believe that the manner of applying prosecution history estoppel under *Festo* is no less unworkable in light of the realities of modern invention practice. The IEEE-USA believes that both criticisms are valid, particularly inasmuch as they each address the lack of balance each rule gives patents' protection and notice functions and the concomitant disincentive each rule brings to creating both pioneering inventions and making technological improvements.

Hughes Aircraft Co. v. United States

The Federal Circuit in *Hughes* acknowledged that circuit court decisions predating the Federal Circuit's establishment took differing views on what range of equivalents, if any, would be available to a patentee where prosecution history estoppel applied. *Hughes* held that patentees who are estopped to assert infringement based on subject matter surrendered by amendment during prosecution may still claim some range of equivalents, with the available spectrum of equivalents ranging "from great to small to zero." *Hughes*, 717 F.2d at 1363.

Hughes initiated what came to be known as the "flexible bar" approach to prosecution history estoppel. Under this approach, the nature and purpose of amendments made during patent prosecution are examined, along with all accompanying circumstances, to determine the exact subject matter actually surrendered. Equivalents outside the surrendered material remain available to the patentee.

The flexible bar suffers from a fundamental lack of precision. Its foremost quality – flexibility – has made it resistant to any clear formulation that would permit predictability as to what subject matter, exactly, has been surrendered by an amendment or a series of amendments during prosecution.

Making this point in *Festo*, the Federal Circuit majority gave an example of a claim that originally recited a value of "less than twenty" and, in light of a rejection over prior art disclosing a value of fifteen, was amended to recite a value of "less than five." 234 F.2d at 577. Under the flexible bar, there is no means by which an inventor wishing to utilize values of five and a half, ten, or fourteen, or anything else between five and fifteen, could ascertain whether the patentee surrendered those potential equivalents. The precise range of equivalents encompassed by the patent, and thus not available for practice by the public, will remain uncertain until litigation somehow settles the matter. Accordingly, by virtue of its flexibility, the flexible bar defeats the notice function of patents by denying the public and would-be inventors notice of a patent's scope.

The flexible bar likewise fails to comport with constitutional and congressional patent policy by not encouraging innovation. A patent system that obfuscates the applicability of the doctrine of equivalents and, thus, whether an invention even arguably infringes a patent because of that doctrine, does not encourage innovation. Incremental innovation in the form of technological advancements is particularly discouraged, since few inventors can be expected to take an unquantifiable risk of being successfully sued for infringement. The flexible bar thus results in what this Court has previously referred to as a "zone of uncertainty which enterprise and experimentation may enter only at the risk of infringement claims . . . [and which] discourage[s] invention only a little less than unequivocal foreclosure of the field." *Markman v. Westview Instruments, Inc.*, 517 U.S. 370, 390 (1996) (quoting *Union Carbon Co. v. Binney & Smith Co.*, 317 U.S. 228, 236 (1942)), as quoted in *Festo*, 234 F.3d at 577. For these reasons and others, the Federal Circuit in *Festo* characterized the flexible bar as unworkable. *Festo*, 244 F.3d at 575-78.

Festo Corp. v. Shoketsu Kinzoku Kogyo Kabushiki Co., Ltd.

In *Festo*, a majority of the Federal Circuit's judges determined that the problems associated with the flexible bar were too inconsistent with sound patent policy for that rule to remain law. *Festo* adopted instead an "absolute bar" approach to prosecution history estoppel. Under this approach, no range of equivalents is available to a patentee with respect to any claim element to which prosecution history estoppel applies. Thus, where a limiting amendment to a claim triggers prosecution history estoppel, the patentee may pursue an infringement action only where the accused device infringes on the literal terms of that element of the patent's claims. The *Festo* majority stated that the Federal Circuit had issued a decision reaching a similar result shortly after *Hughes* was decided, *Kinzenbaw v. Deere & Co.*, 741 F.2d 383 (Fed. Cir. 1984). The decision in that case, however, made no mention of overruling *Hughes*, and the flexible bar of *Hughes* became the dominant line of Federal Circuit authority – until *Festo*.[2]

The absolute bar's purpose is to undo the chilling effect created by its predecessor. In the view of the Federal Circuit, technological advancements in the undefined zone surrounding the literal terms of a narrowed claim will no longer go undeveloped for fear of litigation, and newfound certainty regarding the scope of prosecution history estoppel will stimulate productive advances through improvements on and designs around patented technology.

---

2. Festo has been criticized for reducing the effective scope of existing patents and unfairly disrupting existing commercial relations. In his dissent below, Judge Michel suggested that a "grandfathering" provision should be made for existing patents that contain amended claim limitations and were introduced before the adoption of the absolute bar. *Festo*, 234 F.3d at 618-19 (Michel, J., concurring in part and dissenting in part).

Indisputedly, the absolute bar promotes the notice function of patents. Equally indisputable, however, is that the absolute bar also substantially compromises patents' protective function. This Court instituted and has repeatedly reaffirmed the validity of the doctrine of equivalents precisely because the doctrine is necessary to protect inventors from insubstantial modifications to patented devices that amount to little more than fraud on the patents. *See, e.g., Warner-Jenkinson Co. v. Hilton Davis Chem. Co.*, 520 U.S. 17 (1997); *Graver Tank & Mfg. Co. v. Linde Air Products Co.*, 339 U.S. 605 (1950); *Winans v. Denmead*, 56 U.S. (15 How.) 330 (1854). By denying patentees who amend their claims during prosecution the power to prevent infringement accomplished by nonsubstantive yet literal variations from the amended language, a basic protection historically afforded patentees has been jettisoned in favor of better informing the public of a patent's literal scope.

This retooling of fundamental patent law concepts tips the balance between patents' protective and notice functions too far in the latter's favor. Perhaps because of the enormous volume of patents already issued by the Patent and Trademark Office, rejections of patent applications based on prior art or some other reason are routine, as are responsive amendments to demonstrate patentability. To hold that one who amends a claim while successfully prosecuting a patent has no ability to prevent others from copying the patented invention in all respects except for a minor variation to the narrowed claim effectively eviscerates the patent's protections.

Festo thus grossly disturbs the balance between patents' protective and notice functions, and, in doing so, *Festo* likewise distorts the patent system's incentives to innovate. The absolute bar encourages copyists to replicate a patented device, making otherwise meaningless modifications to the extent necessary to

avoid the literal language of the device's amended claims. Judge Michel, in his partial dissent, declared this procedure be a blueprint for lawful copying of patented material. 234 F.3d at 616-17 (Michel, J., concurring in part and dissenting in part).

The absolute bar also threatens to eliminate the incentive to produce socially valuable pioneering inventions. Any amendment to a pioneering invention's patent claims that relates to the device's patentability will prohibit the pioneering inventor from utilizing the doctrine of equivalents. By their nature, however, pioneering inventions open new avenues of progress, and it is along such avenues that the opportunity to make insubstantial modifications from a patent's literal language is greatest. Denying pioneering inventors the benefits of the doctrine of equivalents may, in many cases, render wasted the investment expended to produce such inventions.

Finally, under the absolute bar approach, all patented devices, whether themselves pioneering inventions or technological improvements, are subject to lawful copying to the extent that after-invented technology allows a copyist to substitute a new technology for a claimed technology and thereby avoid the patent claim's literal language. As Judge Rader pointed out in his partial dissent in *Festo*, this permits a patent's protective function to be wholly defeated by the introduction of an item that functionally serves as an element of a narrowed claim but that does not come within the claim's literal language. 234 F.3d at 619-20 (Rader, J., concurring in part and dissenting in part).

In sum, both the flexible bar and the absolute bar approaches to prosecution history estoppel fail to balance patents' protective and notice functions and to encourage both pioneering inventions and technological improvements. A middle ground is needed, and, in the following section, IEEE-USA proposes just such an approach.

II. Application of Prosecution History Estoppel Strikes An Appropriate Balance Of Patent Policies Only When The Limiting Effect Of An Amendment With Respect To An Accused Device Would Have Been Foreseeable At The Time Of The Amendment.

While it is uncontroverted that subject matter surrendered during prosecution of a patent should not be resurrected by broadly construing a patent's claims through the doctrine of equivalents, *see Prodyne Enterprises, Inc. v. Julie Pomerantz*, 743 F.2d 1581, 1583 (Fed. Cir. 1984) (quoting *Hughes*, 717 F.2d at 1362), the two suggested means of determining the scope of any such surrender – the flexible bar of *Hughes* and the absolute bar of *Festo* – fail to balance adequately patents' protective and notice policies. The IEEE-USA thus recommends an alternative solution. Notwithstanding a patentability-based limiting amendment to a patent's claims during prosecution, the doctrine of equivalents should be permitted to apply unless the limiting effect of the amended language with respect to an accused device would have been foreseeable at the time of the amendment.

Applied objectively, from the perspective of a reasonable person skilled in the art, this "foreseeable bar" applies principles that are readily, if not commonly, understood by both the public and the judiciary. The foreseeable bar rule is also consistent with and may harmonize relevant precedent from the Federal Circuit and this Court. Most importantly, the foreseeable bar rule provides both broader protection to the inventor than that provided by the absolute bar and more meaningful notice to the public than that provided by the flexible bar. The foreseeable bar thus better promotes innovation through pioneering inventions and technological improvements and, thereby, best promotes progress of the useful arts.

A. The Foreseeable Bar Rule Is Consistent With Patent Policies And Harmonizes The Precedent Of This Court And The Federal Circuit.

Foreseeability is a well understood concept of modern law. Thus, courts may draw upon long-established principles for guidance in determining whether a particular limiting effect was foreseeable at the time a limitation was made. Furthermore, the use of such principles is rooted in the case law of both this Court and the Federal Circuit. Indeed, by utilizing a foreseeable bar, cases from both courts limiting application of the doctrine of equivalents may in certain key respects be harmonized.

Foreseeabilty is a traditional jurisprudential device that is commonly used by courts to circumscribe legal principles in a manner that is flexible and yet objective and reasonably determinate. Thus, foreseeability is often used to determine, as a matter of law, the existence of a common law duty of care. *E.g.*, *Palsgraf v. Long Island R.R.. Co.*, 162 N.E. 99 (N.Y. 1928) (Cardozo, J.); *see, e.g.*, Peter F. Lake, *Common Law Duty in Negligence Law*, 34 SAN DIEGO L. REV. 1053 (1997) (contrasting elements of modern no-duty rules among the states).

Likewise, foreseeability is commonly used as a measure to limit the scope of damages in civil contract actions. *Hadley v. Baxendale*, 156 Eng. Rep. 145 (1854) (consequential damages in contract). In patent cases, too, the Federal Circuit has utilized foreseeability as a means to measure damages. *Rite-Hite Corp. v. Kelley Co., Inc.*, 56 F.3d 1538 (Fed. Cir. 1995) (en banc).

In the estoppel context, the contract doctrine of promissory estoppel requires proof that a promisor should reasonably have foreseen that his promise would induce

reliance by the person to whom the promise was made. RESTATEMENT (SECOND) OF CONTRACTS § 90 (1981). Similarly, this Court has specifically applied foreseeability to measure whether a defendant's offensive use of collateral estoppel is fair. *Parkland Hosiery Co. v. Shore*, 439 U.S. 322, 330 (1979) ("If a defendant in the first action is sued for small or nominal damages, he may have little incentive to defend vigorously, particularly if future suits are not foreseeable.").

More specific to the issues in this case, foreseeability has played a recognized role in effectuating patents' protective and notice functions. For instance, in *Kinzenbaw v. Deere & Co.*, 741 F.2d 383 (Fed. Cir. 1984), the Federal Circuit relied on its prior decision in *Hughes* and this Court's decision in *Graver Tank* to conclude that "the doctrine of equivalents is designed to protect inventors from unscrupulous copyists and *unanticipated equivalents*." *Id.* at 389 (emphasis supplied). Thus, the Federal Circuit held, a patent applicant is not required to predict "all future developments which enable the practice of his invention in substantially the same way." *Id.* (quoting *Hughes*, 717 F.2d at 1362). Turning to the facts before the court, *Kinzenbaw* found that the claimed variation was neither copied nor unanticipated, and the court held that prosecution history estoppel barred the patentee from relying on the doctrine of equivalents.

Kinzenbaw plainly suggested that, if the particular limiting effect created by the patentee's amendments to the patent's claim language had been unforeseeable, the doctrine of equivalents would still have been available to the patentee. Accordingly, *Kinzenbaw* relied squarely on foreseeability principles.

Foreseeability is also recognized in the Federal Circuit's decision in *Sage Products v. Devon Industries*, 126 F.3d 1420, 1425 (Fed. Cir. 1997). There, following this Court's command that "[t]he limits of a patent must be known," *Markman v. Westview Instruments, Inc.*, 517 U.S. 370, 390 (1996), the Federal Circuit held that, "as between the patentee who had a clear opportunity to negotiate broader claims but did not do so, and the public at large, it is the patentee who must bear the cost of its failure to seek protection for [a] *foreseeable alteration* of its claimed structure." 126 F.3d at 1425 (emphasis supplied).

Sage Products specifically held that a patentee may not utilize the doctrine of equivalents to reach a foreseeable modification to a claimed innovation. The court observed that allowing the doctrine of equivalents to encompass foreseeable variations to claims would create a "zone of uncertainty into which competitors tread only at their peril." *Id.* at 1425.

Thereafter, in *Festo*, the Federal Circuit relied extensively on the need for forseeability with respect to the scope of equivalents available to a patent's claims when the court held that limiting amendments based on patentability cannot be expanded beyond their literal language through the doctrine of equivalents. The *en banc* court emphasized that the flexible bar of *Hughes* made it "virtually impossible" to "predict[] with any degree of certainty the scope of surrender that will be found when prosecution history estoppel applies." 234 F.3d at 574-75.

Festo shows that foreseeability marks the conceptual juxtaposition of patents' protective and notice functions. Satisfactory notice to the public of a patent's scope is achieved where the public may foresee the limits of the protection that will be afforded a patent through application

of the doctrine of equivalents. Foreseeability is thus wholly consistent with, and, in fact, an essential component of, the basic functions of protection and notice that underlie the patent system. Viewed through the lens of foreseeability, the Federal Circuit's decisions in *Hughes*, *Kinzenbaw*, *Sage Products*, and *Festo* may be harmonized with respect to a balancing of the protection function and the notice function.

Not only is a focus on foreseeability to determine a limiting amendment's effect consistent with the Federal Circuit's case law, it is not inconsistent with this Court's prosecution history estoppel decision in *Exhibit Supply Co. v. Ace Patents Corp.*, 315 U.S. 126 (1942). In *Exhibit Supply*, the Court held that a patentee who selected limiting language to amend a claim while prosecuting the patent had thereby "recognized and emphasized the difference" between the original claim and an amended claim "and proclaimed his abandonment of all that is embraced in that difference." *Id.* at 136-37. The Court made no suggestion that the patentee's abandonment extended to equivalents that could not reasonably be foreseen. To the contrary, the Court's language suggested that the patentee specifically abandoned equivalents that should reasonably have been recognized when the patentee made the limiting amendment.

In sum, foreseeability is a well established concept in modern law that is consistent with, if not an essential component of, the basic patent functions of protection and notice. The concept is also well rooted in connection with limitations on the doctrine of equivalents, as the Federal Circuit expressly utilized foreseeability for this purpose in *Kinzenbaw* and *Sage Products*, and the decisions in *Hughes*, *Festo*, and *Exhibit Supply* may reasonably be viewed as efforts to limit the doctrine of equivalents in accordance with foreseeability. Accordingly, the use of foreseeability to limit application of the doctrine of equivalents is supported by existing case law.

B. The Foreseeable Bar Rule Overcomes the Failings Of The Absolute Bar And The Flexible Bar.

The foreseeable bar advanced by the IEEE-USA holds that, notwithstanding a patentability-related amendment to a patent's claims during prosecution, the doctrine of equivalents will be applied unless the limiting effect of the amended language with respect to an accused device would have been foreseeable at the time of the amendment to a reasonable person skilled in the art. The foreseeable bar avoids each "parade of horribles" posited by respective opponents of the flexible bar and the absolute bar, while simultaneously effectuating and balancing the patent policies advanced by their respective advocates. Thus, the foreseeable bar is not only fair, it overcomes the considerable failings of both the flexible and the absolute bars and best satisfies the fundamental constitutional policy of promoting the useful arts.

To begin, application of the foreseeable bar is eminently fair. Where the limiting effect of an amendment's language with respect to an accused device should have been foreseen by a person reasonably skilled in the art, the patentee should not be permitted to ignore that effect by utilizing the doctrine of equivalents to expand a patent's claims to encompass subject matter that, by all reasonable appearances, was abandoned during the patent's prosecution. Instead, the patentee should be estopped to assert equivalence.

On the other hand, where the limiting effect of an amendment's language with respect to an accused device could not have been objectively foreseen at the time of the amendment – perhaps because the significance of the limitation was obfuscated by the "subtlety of language or complexity of the technology, [or a] subsequent change in the state of the art, such as later-developed technology,"

Sage Products, 126 F.3d at 1425 – refusing to apply the doctrine of equivalents unfairly deprives the patentee of protection that this Court has repeatedly deemed essential to a meaningful right of exclusivity under the patent system. To impose a consequence on a patentee based ostensibly on the intent underlying the patentee's actions, but where those actions do not reasonably support any such intent, is the antithesis of fairness.

In this way, the foreseeable bar overcomes the substantial failings of the absolute bar. As shown in Part I-C, *supra*, the absolute bar is unworkable and constitutionally ineffective because it permits competitors to utilize subject matter that effectively works a fraud on a patent. Under the absolute bar, only trivial innovations, if not pure copies, are encouraged, while the creation of pioneering innovations is directly discouraged. Under the foreseeable bar, these harsh consequences are largely avoided.

The foreseeable bar prohibits use of the doctrine of equivalents only where the objective inference to be drawn from the patentee's choice of language shows that the equivalent subject matter in the infringing device was in fact abandoned during the patent's prosecution, thus opening the door to competitors' lawful use of that subject matter. Invention of pioneering innovations is not discouraged, and trivial innovations are not disproportionately encouraged, because the foreseeable bar permits the doctrine of equivalents to remain available to patentees even if, as is often the case,, a patent's claims are amended for reasons related to patentability.

Significantly, the foreseeable bar rule also permits ready and fair resolution to the problem of after-arising technology. In *Festo*, Judge Rader specifically criticized the absolute bar by noting that it permits competitors to "have unfettered

license to appropriate all patented technology [that uses] outdated terms" in the face of subsequently developed technology. *Festo*, 234 F.3d at 619 (Rader, J., concurring in part and dissenting in part) (noting that the terms "cathode" and "anode" for vacuum-tube instruments gave way to literally distinguishable "collectors" and "emitters" after the invention of the transistor). The foreseeable bar permits patent protection when insubstantial changes are made using after-invented technology that could not have been foreseen at the time of an amendment.

Further, the foreseeable bar permits patent protection where subtleties of language or inherent complexity of a technology is exploited to avoid the literal language of a patent's claims by substitution of a substantial equivalent. In those cases as well, the foreseeable effect of the limiting language governs.

In his partial dissent in *Festo*, Judge Michel raised concerns that the absolute bar provided a blueprint for lawful copying of patented material. 234 F.3d at 616-17 (Michel, J., concurring in part and dissenting in part). The foreseeable bar addresses this concern to the extent that the limiting effect of an amendment with respect to an accused device was not foreseeable. Where foreseeability is found, the patentee is deemed to have intended to abandon that particular equivalent, and thus neither patent law nor fundamental fairness is offended by the competitor's use of the equivalent subject matter or by the application of prosecution history estoppel to the patentee.

Importantly, the foreseeable bar avoids not only the failings of the absolute bar but the failings of the flexible bar. As also discussed in Part I-C, *supra*, the flexible bar is unworkable and constitutionally ineffective because the public cannot reasonably predict the outcome of its

application in a particular case and, as a result, incremental innovations in the form of technological improvements are improvidently discouraged. The foreseeable bar eliminates these concerns by eliminating the flexible bar's unbounded and variable inquiry and replacing it with a straightforward and measurably more predictable foreseeability test.

To return to the example used by the majority in *Festo*, where a claim for "less than twenty" is amended to "less than five" in view of prior art disclosing a value of fifteen, the reasonable person skilled in this particular art would foresee that equivalents using a value over five were abandoned by the language of the limiting amendment, absent some extraordinary circumstance. This would permit a district court to determine, and a reviewing court to confirm, that, as a matter of law, prosecution history estoppel barred the patentee's infringement claim against an alleged infringer who utilized a value of five and a half, based on an objective view of the meaning and effect of the amended language itself.

By comparison, as the *Festo* majority complained, the flexible bar calls for a pliable examination of a series of extraneous factors. Consequently, an inventor wishing to improve a device through a meaningful technological innovation that was arguably an equivalent to the amendment's literal language could not predict in advance whether, under that test, a court would apply prosecution history estoppel to the patentee or permit a jury trial on equivalence. Lawful innovations may never reach fruition merely because the uncertainty of the existing patent's scope presents too great a litigation risk. This result is inconsistent with promoting progress, and it is unnecessary in light of the more predictable alternative of the foreseeable bar.

In particular, while the foreseeable bar is not a bright line rule like the absolute bar, it provides a concise test that is both flexible and readily comprehensible to both the public and to the district court judges who must apply it. Under the flexible bar of *Hughes*, a judge must not only consider a claim construction, but the panoply of issues relating to a study of prosecution history, validity in view of the prior art cited and of record and the totality of the circumstances under which the application was amended to determine the entire scope of equivalents remaining after the amendment. The judge must then formulate that scope of equivalents and then either apply it to the accused device or relate it to a jury through an instruction that, like the claims themselves, may be constrained by the limitations of language in conveying the inventive idea. On appeal, the reviewing court must revisit all of the factors considered below and may well view their totality in a way different from the trial judge's view, which ensures that in each case the ultimate resolution of the estoppel question will remain uncertain until the appeal is concluded.

In contrast, a foreseeable bar asks the trial judge only whether the limiting effect of an amendment's language as applied to exclude an accused device from literal infringement was foreseeable at the time of the amendment. Foreseeability, in general, is a consummate common law principle with which judges are intimately familiar. Unlike the flexible bar, the foreseeable bar is more focused, limiting the inquiry as a matter of law to a particular limiting effect of particular claim language with respect to a particular accused device. The bases for the trial judge's conclusion can be readily articulated in an opinion, which in turn can be readily reviewed as a matter of law by an appellate court.

Ultimately, the foreseeable bar is more equitable than the absolute bar and more certain than the flexible bar. As a matter of constitutional policy, then, the foreseeable bar presents the best means of promoting progress of the useful arts and should be adopted by this Court as the relevant inquiry in determining when a patentee is estopped to rely on the doctrine of equivalents.

It remains only to note that, if adopted by this Court, the foreseeable bar would be amenable to case-by-case development by the lower courts to ensure equity and compliance with the constitutional purposes of the patent system. In sharp contrast, the bright-line rule of *Festo* all but forecloses the opportunity for further refinement where its results prove unjust, and, despite twenty years of case-by-case development, the flexible bar has remained sufficiently unmoored to firm principles that it has never overcome its unpredictable and inequitable nature. Thus, unlike the absolute and flexible bars, a foreseeable bar would facilitate the capacity of courts below to best "implement procedural improvements to promote certainty, consistency, and reviewability to this area of the law." *Warner-Jenkinson*, 520 U.S. at 39 n.8.

CONCLUSION

The Patent Act should be interpreted to promote the purposes set forth in the Patent Clause and the policies established thereunder by Congress. With respect to prosecution history estoppel, both the absolute bar and the flexible bar rules fail to balance those concerns adequately, with each being marred by its own substantial shortcomings.

Unlike the absolute and flexible bars, the foreseeable bar described in this brief is easily grasped and applied, assures both fundamental fairness and predictability, and is consistent with patent law policies and case law of this Court and the Federal Circuit. Accordingly, the IEEE-USA respectfully submits that progress is best promoted, and the patent functions of protection and notice are best balanced to encourage all forms of invention, by enforcing prosecution history estoppel through the foreseeable bar.

Respectfully submitted,

ANDREW C. GREENBERG
Counsel of Record
MATTHEW J. CONIGLIARO
C. DOUGLAS MCDONALD
CARLTON FIELDS, P.A.
777 S. Harbour Island Blvd.
Tampa, Florida 33602
(813) 223-7000

Attorneys for Amicus Curiae Institute of Electrical and Electronics Engineers – United States of America (IEEE-USA)

REC'D TEAM 11
NOV 14 2001

No. 00-1543

Supreme Court, U.S.
FILED
OCT 31 2001
OFFICE OF THE CLERK

UNSCANNED

In The

Supreme Court of the United States

Festo Corporation,

Petitioner,

v.

Shoketsu Kinzoku Kogyo Kabushiki Co., LTD.,
a/k/a SMO Corp. and SMC Pneumatics, Inc.,

Respondents.

On Writ of Certiorari to the United States Court of Appeals For the Federal Circuit

BRIEF OF THE CONSUMER PROJECT ON TECHNOLOGY AS *AMICUS CURIAE* IN SUPPORT OF RESPONDENTS

Joshua D. Sarnoff
Counsel of Record
Glushko-Samuelson Intellectual
Property Law Clinic
Washington College of Law
American University
4801 Mass. Ave., NW
Washington, DC 20016
(202) 274-4165
Attorney for Amicus Curaie
Consumer Project on Technology

BEST AVAILABLE COPY

TABLE OF CONTENTS

STATEMENT OF INTEREST.....1

SUMMARY OF ARGUMENT.....2

ARGUMENT.....4

I. THE COMPLETE BAR OF PROSECUTION HISTORY ESTOPPEL IS NOT JUST THE LAW, IT'S A GOOD IDEA.....4

A. A Complete Bar To The Doctrine Of Equivalents Is Logically Required By The Patentee's Own Narrowing Amendment Of The Claim.....4

B. The Flexible Bar Would Create "Odious" Monopolies and Would Unjustly Enrich Patentees.....7

1. Monopolies That Lack Consideration Are "Odious" And Destroy Competition That Is The Public's "Common Right".....7

2. The Flexible Bar Would Withdraw Patentable Subject Matter From The Public Domain Without Providing Consideration.....8

3. The Flexible Bar Would Unjustly Enrich Patentees.....10

C. The Flexible Bar Would Destroy Clear Notice And Would Inexorably Chill Competition.....11

D. The Flexible Bar Would Discourage Rather Than Promote Investment and Invention.....15

II. A FLEXIBLE BAR TO THE DOCTRINE OF EQUIVALENTS FOR AMENDED CLAIMS WOULD HARM THE PUBLIC.....23

A. A Flexible Bar Would Lead To Higher Prices For Goods and Services.....23

C. A Flexible Bar Would Lead To Fewer And Poorer Goods and Services And Thus To Fewer Choices.....27

C. A Flexible Bar May Harm Small Businesses And Independent Inventors, Which May Be The Most Important Sources Of Innovation.....29

CONCLUSION.....30

TABLE OF AUTHORITIES

Cases

Atlas Powder Co. v. E.I. du Pont De Nemours & Co., 750 F.2d 1569 (Fed. Cir. 1984).....7

Bell Atlantic Network Services v. Covad Communications Group, 262 F.3d 1258 (Fed. Cir. 2001). 26, 28

Bienville Water Supply Co. v. City of Mobile, 186 U.S. 212 (1902). 7

Bonito Boats v. Thunder Craft Boats, Inc., 489 U.S. 141 (1989). 9

Case of The Monopolies, 11 Coke, 84b (King's Bench 1602). 7

Computer Assocs. Int'l., Inc. v. Altai, Inc., 982 F.2d 693 (2d Cir. 1992). 10

Conopco, Inc. v. May Department Stores Co., 46 F.3d 1556 (Fed. Cir. 1994), *cert. denied*, 514 U.S. 1078 (1995). 6

Exhibit Supply Co. v. Ace Patents Corp., 315 U.S. 126 (1942). 2, 5, 6

Fay v. Cordesman, 109 U.S. 408 (1883).....5

Festo Corp. v. Shoketsu Kinzoku Kogyo Kabushiki Co., 234 F. 3d 558 (Fed. Cir. 2000).....1, 14

General Elec. Co. v. Wasbash Appliance Corp., 304 U.S. 364 (1938). 14

Glaxo Group Ltd. & GlaxoWellcome, Inc. v. Ranbaxy Pharmaceuticals, 262 F.3d 1333 (Fed. Cir. 2001).....28

Goodyear Dental Vulcanite Co. v. Davis, 102 U.S. 222 (1880). 12

Graham v. John Deere Co., 383 U.S. 1 (1966).....10

Graver Tank & Mfg. Co. v. Linde Air Products Co., 339 U.S. 605 (1950). 10, 11

Holland Furniture Co. v. Perkins Glue Co., 227 U.S. 245 (1928). 6

Hubbell v. United States, 179 U.S. 77 (1900). 2

Markman v. Westview Instruments, Inc., 517 U.S. 370 (1996). 3, 14

Merrill v. Yeomans, 94 U.S. 568 (1877). 11, 12, 14
Miller v. Brass Co., 104 U.S. 350 (1881).....13
Morris v. Bramson, 1 Carp. P.C. 30, 1 Abbott's P.C. 21, 22 (King's Bench 1776) (Lord Mansfield) 15
O'Reilly v. Morse, 56 U.S. 62 (1853).....13, 22
Pharmacia & Upjohn Company v. Mylan Pharmaceuticals Inc., 170 F.3d 1373 (Fed. Cir. 1999).....25
Proprietors of Charles River Bridge v. Proprietors of Warren Bridge, 36 U.S. 420 (1837).....2, 8
Regents of the University of California v. Eli Lilly & Co., 119 F.3d 1559 (1997).....6
Shepard v. Carrigan, 116 U.S. 593 (1886). 2
Sony Computer Entertainment, Inc. v. Connectix Corp., 203 F.3d 596 (9th Cir. 2000).....29
Smith v. Magic City Kennel Club, 282 U.S. 784 (1931). 2
United States v. Dubilier Condenser Corp, 289 U.S. 178 (1933). 9
United Carbon Co. v. Binney & Smith Co., 317 U.S. 228 (1942). 14
United States v. Heth, 7 U.S. 399 (1806) (Paterson, J.). 11
Warner-Jenkinson Co. v. Hilton Davis Chemical Co., 520 U.S. 17 (1997).....4, 6, 13
Water-Meter Co. v. Desper, 101 U.S. 332 (1879). 5
Winans v. Denmead, 56 U.S. 330 (1853). 12

Constitutional Provisions

U.S. Const., art. I, §8 .....2, 8, 15, 22

Statutes

21 U.S.C. §355(c)(3)(D)(ii).....18
21 U.S.C. §360cc(b).....18
21 U.S.C. §505A. 18
26 U.S.C. §45C.....18
35 U.S.C. §§154(a).....7
35 U.S.C. §§271(a).....7
35 U.S.C. §101. 15
35 U.S.C. §102. 10
35 U.S.C. §103. 10
35 U.S.C. §112. .....12, 13
35 U.S.C. §131. 11
Act of April 10, 1790, 1 Stat. 109. 11
Act of February 21, 1793, 1 Stat. 318. 11
Act of July 4, 1836, 5 Stat. 117. 11
Act of July 8, 1870, 16 Stat. 198. 12

Other Authorities

Aggressive Patenting May Stifle Gene Discovery Benefits, Los Angeles Times, February 8, 2000, at www-tech.mit.edu/V120/N3/shorts_2.3w.html. 23
An Alta Vista Search Engine Monopoly?, January 19, 2001, at www.pandia.com/searchworld/2001-05-altavista.html...23
Andrew Pollack, *Battling Searle, University Gets Broad Patent for New Painkiller*, NY Times, at www.cif.rochester.edu/~craig/cox2patent.html 23
Arti K. Rai, *Evolving Scientific Norms and Intellectual Property Rights: A Reply to Kieff*, 95 Nw. U. L. Rev. 707 (2001). 16
Arti K. Rai, *The Information Revolution Reaches Pharmaceuticals: Balancing Innovation Incentives, Cost, and Access in the Post-Genomics Era, 2001 U. Ill. L. Rev. 173 (2001).* 16

Bronwyn H. Hall & Rosemarie H. Ziedonis, *The patent paradox revisited: an empirical study of patenting in the U.S. semiconductor industry,* 1979-1995, 32 RAND J. Econ. 101 (2001). 17

Carl Shapiro, Antitrust Limits to Patent Settlements, 3, (May 1, 2001), at www.haas.berkeley.edu/~shapiro/settle.pdf. 15

Center for Drug Evaluation and Research Report to the Nation, Improving Public Health Through Human Drugs, Food and Drug Administration US Department of Health and Human Services, at www.fda.gov/cder/reports/rtn99.htm. 25

Charles R. Macedo, *First-To-File: Is American Adoption of the International Standard In Patent Law Worth The Price,* 18 AIPLA Q.J. 193 (1990). 18

Craig Bucknell, *British Telecom: We Own Hyperlinking,* June 19, 2000, at wired.com/news/politics/0,1283,37095,00.html. 24

Danielle Knight, *WTO Urged to Address Access to Medicine,* TWN Online visited September 17, 2001 at www.twnside.org.sgtitleaddress-cn.htm. 25

Donald S. Chisum, *The Scope of Protection For Patents After the Supreme Court's Warner-Jenkinson Decision: The Fair Protection—Certainty Conundrum,* 14 Santa Clara Computer & High Tech. L.J. 1 (1998). 5, 6, 8

Edward C. Walterscheid, *Charting a Novel Course: The Creation of the Patent Act of 1790,* 25 AIPLA Q.J. 445 (1997). 12

Edward C. Walterscheid, *The Early Evolution of the United States Patent Law: Antecedents (Part 2),* 76 J. Pat. & Trademark Off. Soc'y 849 (1994) 7, 8, 9

Edward C. Walterscheid, *The Early Evolution of the United States Patent Law: Antecedents (Part 3),* 77 J. Pat. & Trademark Off. Soc'y 771 (1995) 9

Edward C. Walterscheid, *To Promote the Progress of the Useful Arts: American Patent Law and Administration, 1787-1836 (Part 1),* 79 J. Pat. & Trademark Off. Soc'y 61 (1997). 12

Edward C. Walterscheid, *To Promote the Progress of the Useful Arts: American Patent Law and Administration, 1787-1836 (Part 2),* 80 J. Pat. & Trademark Off. Soc'y 11 (1998). 9

Eric von Hippell, *The Sources of Innovation* 53, (Oxford U. Press 1988). 18

F.M. Scherer, *Industry Structure, Strategy, and Public Policy* (Harper Collins 1996). 17

F.M. Scherer, *Nordhaus' Theory of Optimal Patent Life: A Geometric Reinterpretation,* 62 Am. Econ. Rev. 422 (1972). 16

F.M. Scherer, *The Link Between Gross Profitability and Pharmaceutical R&D Spending,* Health Affairs, Sept. 1, 2001 at 220. 20

Gardiner Harris, *Bayer's Cipro Will Be Profitable, Even on Discount Deal With U.S.,* Wall St. J., Oct. 26, 2001 24

India: Cipla Launches 3-In-1 Aids Pill, Reuters at www.dailynews.yahoo.com/h/nm/20010806/h/1/aidspull_1/html. 28

Jesse Pesta, *India Braces for a Brave New Drug World,* Wall Street J., Mar. 7, 2001 A17. 28

John Barton, *Patents and Antitrust: A Rethinking In Light of Patent Breadth And Sequential Innovation,* 65 Antitrust L.J. 449 (1997). 18

John Barton, *Reforming the Patent System,* 287 Science 1933 (2000). 18

John P. Sumner, *The Copyright/Patent Interface: Patent Protection for the Structure of Computer Code,* 30 Jurmetrics J. 107 (1989). 29

Jonathan B. Baker, *Promoting Innovation Competition Through the Aspen/Kodak Rule,* 7 Geo. Mason L. Rev. 495 (1999). 21, 22

Joseph Farrell, Arguments for Weaker Intellectual Property Protection in Network Industries, 3 StandardView 46 (June 1995). 16
Joseph Farrell, *Standardization and Intellecutual Property,* 30 Jurmetrics J. 35 (1989).....21, 22
Joseph J. Cordes et al., *A Survey of High Technology Firms,* U.S. Small Bus. Assn., at 15, Feb. 1999, at www.sba.gov/advo/research/ rs189tot.pdf.....22, 29, 30
Josh Lerner. *Patenting In The Shadow Of Competitors*, 38 J.L. & Econ. 463 1995. 26
Marcia Angell and Arnold S. Relman, *Prescription for Profit,* Washington Post A27 (June 20, 2001). 20
Mariko Sakakibara & Lee Branstetter, *Do stronger patents induce more innovation? Evidence from the 1988 Japanese patent law reforms,* 32 RAND J. on Econ. 77 (2001).....19
Mark A. Lemley, *The Economics of Improvement In Intellectual Property Law,* 75 Tex. L. Rev. 989 (1997).....15
Mark Lloyd, *Understanding the Digital Divide: A Speech at Audrey Cohen College* (July 10, 2000) at www.civilrightsforum.org/audreycohen. html.....26
Matt Dace, *An Impossible Choice: Juggling Medical Needs and Food*, Food Bank at www.stlfoodbank.org/Need/barbara.htm. 25
Pamela Samuelson, *Economic and Constitutional Influences on Copyright Law in the United States,* at www.sims.berkeley.edu/~pam/papers/Sweet&Maxwell_1. htm. 22
Rebecca S. Eisenberg, *The Shifting Functional Balance of Patents and Drug Regulation,* Health Affairs, Sept. 1, 2001.....19
Robert P. Merges & Richard C. Nelson, *Market Structure and Technical Advance: The Role of Patent Scope Decisions,* in Antitrust, Innovation, and Competition (Thomas M. Jorde & David J. Teece, eds. 1992).....7, 15, 16
Statement of Steven W. Schondelmeyer, *Prescription Drugs,* at www.gil.house.gov/isspd.htm 24

Stephen W. Schondelmeyer, *Patent Extension of Pipeline Drugs: Impact on U.S. Health Care Expenditures* PRIME Institute, July 28, 1999 at www.house.gov/berry/prescriptiondrugs/schondelmeyer.ht m.....24
Suzanne Scotchmer, *Standing on the Shoulder's of Giants: Cumulative Research and the Patent Law,* 5 J. Econ. Perspectives 29 (1991). 15
Symposium, *The Stanford Workshop on Intellectual Property and Industry Competitive Standards: Rapporteur's Report*, Stan. Tech. L. Rev. 1998. at stlr.stanford.edu/STLR/Symposia/Antitrust/99_VS_7/ article.htm.....27
Testimony of Bernard Schwetz, Acting Principal Deputy FDA Commissioner before the US Senate Committee on Appropriations Subcommittee on Agriculture, Rural Development, and Related Agencies, May 10, 2001 at www.fda.gov/oc/oms/ofm/budget/2002/senatefinalwritten. htm. 25
Testimony of Joseph Stiglitz Before the Federal Trade Commission, (Oct. 12, 1995), at www.ftc.gov/opp/ global/GC101295.htm.....16
W.D. Nordhaus, *The Optimum Life of a Patent: Reply*, 62 Am. Econ. Rev. 428 *(1972).* 16
Wesley M. Cohen et al., *Protecting Their Intellectual Assets: Appropriability Conditions and Why U.S. Manufacturing Firms Patent (Or Not),* Nat'l. Bur. of Econ. Res. Working Paper 7552 (Feb. 2000), at www.nber.org/papers/w7552. .....17, 18, 21
William R. Woodward, *Definiteness and Particularity in Patent Claims,* 46 Mich. L. Rev. 755 (1948).....13

STATEMENT OF INTEREST[1]

Amicus curiae Consumer Project on Technology (CPT) is a public interest non-profit organization founded by Ralph Nader in 1995. CPT represents the public who are the ultimate beneficiaries of the invention of new technologies. CPT's constituents are harmed whenever intellectual property legal doctrines unnecessarily discourage the invention, development, disclosure, and application of new technologies.

CPT seeks to protect the public interest in regard to intellectual property law in general, and in the fields of pharmaceuticals and biotechnology, computer software and information services in particular. Intellectual property rights in these fields are in some cases matters of life and death or of critical importance to the public's participation in economic activity. The public reaps the benefit of inventions in these fields by patentees and by their competitors. CPT thus has been involved in significant intellectual property law issues relating to these fields, both domestically and abroad.

CPT is gravely concerned that Petitioner has asked this Court to reverse the considered decision of the Federal Circuit in *Festo Corp. v. Shoketsu Kinzoku Kogyo Kabushiki Co.*, 234 F.3d 558 (Fed. Cir. 2000). To do so would overturn 130 years of settled patent law in this Court that has helped to assure proper incentives for patentees and competitors to invest in research and development and to sequentially invent additional and better pioneering and incremental goods and services for public benefit. Petitioner's request thus threatens the lives and livelihood of Americans and our economy.

---

[1] Letters of consent of the parties to file this brief have been obtained and are being filed herewith. No counsel for a party authored this brief in whole or in part and no person or entity other than *amicus curaie* and counsel made a monetary contribution to the preparation or submission of this brief, but Shondell Foster, Sam Hechtman, Georgina McCaughan, and Justin Perillo, students in the Glushko-Samuelson Intellectual Property Law Clinic, assisted in the drafting of the brief.

SUMMARY OF ARGUMENT

As this Court held in 1942, "file wrapper estoppel" (now called "prosecution history estoppel") prevents resort to the "doctrine of equivalents" to reclaim any subject matter disclaimed by the amendment of a claim element during prosecution of a patent. *Exhibit Supply Co. v. Ace Patents Corp.*, 315 U.S. 126, 136-37 (1942) (citing, *inter alia*, *Shepard v. Carrigan*, 116 U.S. 593, 598 (1886), *Hubbell v. United States*, 179 U.S. 77, 83 (1900), and *Smith v. Magic City Kennel Club*, 282 U.S. 784, 789-90 (1931)). This conclusion is logically compelled by the fact that the patentee intended to narrow the scope of the patent when filing the amendment. Petitioner urges the Court to overturn 130 years of settled patent law and to contravene logic by allowing patentees to "flexibly" reclaim through application of the doctrine of equivalents the subject matter that they had disclaimed by amendment. The Court should reject Petitioner's suggestion to overturn settled expectations and to jeopardize the "Progress of Science and useful Arts." U.S. Const., art. I, §8.

A flexible bar to the doctrine of equivalents would place in the hands of the patentee subject matter that the patentee had disclaimed to the public. The flexible bar thus would expand the patent monopoly at high cost to the public, without any consideration given in return in the form of additional disclosure of inventive subject matter. Such a grant of expanded monopoly rights is "odious," as it destroys beneficial competition that is the public's "common right." *Proprietors of Charles River Bridge v. Proprietors of Warren Bridge*, 36 U.S. 420, 567 (1837). Further, the flexible bar would unjustly enrich the patentee, which made the choice to disclaim that scope. Unlike in copyright law, the words of the patentee rather than of the accused infringer provide the line between beneficial competition and unscrupulous copying.

A flexible bar to the doctrine of equivalents also would destroy the "clear notice" provided by a patent's claims and by

the record of a patent's prosecution history. Competitors would be chilled from providing lower-cost and better goods and services, as they would face litigation risks and increased licensing costs that extend beyond the lines that would be drawn in infringement actions. This chill would harm the public as much as improperly granting a reclaimed monopoly to the full extent of disclaimed subject matter. *See Markman v. Westview Instruments, Inc.*, 517 U.S. 370, 390 (1996).

A flexible bar to the doctrine of equivalents would likely discourage more innovation than it would promote, imposing direct and opportunity costs of increased prices and foregone goods and services. All invention, whether pioneering or incremental, is necessarily sequential to prior knowledge. A flexible bar would not retrospectively promote any additional invention by existing patentees, but would discourage competitors from prospectively investing in research and development. A flexible bar thus is likely to generate only additional windfall profits at public expense.

Even if the flexible bar would generate a dynamic incentive for patentees to increase investments and invention, the flexible bar would likely discourage investments and invention by competitors to a greater degree. The patentee should value the relevant sequential inventions less, as it will disclaim that subject matter to the public. Competitors should have the greater dynamic incentive to toil in the field of disclaimed scope that will be left open by the patentee.

This balance should weigh even more heavily against patentees when the sequential inventions at issue are pioneering rather than incremental. The competing incentives are of particular concern to smaller inventors, who are less able to afford either the costs of defending infringement actions or the costs of patenting. But even if net incentives would favor patentees, retaining the complete bar cannot make matters any worse. In contrast, adopting the flexible bar would require the public to pay too high a short-term price for any long-term increase in innovation that would result.

ARGUMENT

I. THE COMPLETE BAR OF PROSECUTION HISTORY ESTOPPEL IS NOT JUST THE LAW, IT'S A GOOD IDEA

A. A Complete Bar To The Doctrine Of Equivalents Is Logically Required By The Patentee's Own Narrowing Amendment Of The Claim

The "doctrine of equivalents" extends a patent's scope beyond the literal meaning of the language of a patent's claim. *See Warner-Jenkinson Co. v. Hilton Davis Chemical Co.*, 520 U.S. 17, 21 (1997). Over 50 years before *Warner-Jenkinson*, this Court cogently explained that the doctrine of equivalents does not apply to amended claim elements. This is because a patentee who narrows an element of a patent claim by filing an amendment during prosecution cannot recover in an infringement action any patentable scope beyond the literal meaning of the amended element.

Thus, the very existence of a narrowing amendment of a patent claim operates as a complete bar to application of the doctrine of equivalents:

> By the amendment he recognized and emphasized the difference between the two phrases and proclaimed his abandonment of all that is embraced in that difference .... The difference which he thus disclaimed must be regarded as material, and since the amendment operates as a disclaimer of that difference it must be strictly construed against him .... It follows that what the patentee, by a strict construction of the claim, has disclaimed ... cannot now be regained by recourse to the doctrine of equivalents, which at most operates, by liberal construction, to secure to the inventor the full benefits, not disclaimed of the claims allowed.

Exhibit Supply Co. v. Ace Patents Corp., 315 U.S. 126, 136-37 (1942) (citations omitted) (emphasis added).

The complete bar of prosecution history estoppel is not only legally sound, it is logically required. When filing any amendment that reduces the scope of subject matter claimed, the patentee necessarily intends to restrict the scope of his claim to the added or limited element. The patentee thus should be careful to employ language in the added or limited element that excludes only unpatentable subject matter, or patentable subject matter that the patentee intends to disclaim:

> [I]f the patentee specifies any element as entering into the combination, either directly by the language of the claim, or by such a reference to the descriptive part of the specification as carries such element into the claim, he makes such element material to the combination, and the court cannot declare it to be immaterial.

Fay v. Cordesman, 109 U.S. 408, 420-21 (1883) (citing *Water-Meter Co. v. Desper*, 101 U.S., 332, 337 (1879)) (emphasis added). Regardless of how broadly the narrowing language of the amended element is literally construed, whether the allegedly infringing product or process was unforeseeable, or why the amendment was made, any subject matter beyond that literal meaning will have been disclaimed.[2]

---

[2] The purpose of an amendment is relevant only to determining whether to construe ambiguous amending language as narrowing the scope of the original element. Such ambiguity will be extremely rare. In contrast, the common occurrence of adding elements or of adding unambiguous limitations necessarily narrows scope. *Warner-Jenkinson* thus recognizes the obvious, that absent an explanation for an amendment of ambiguous scope, the amendment is presumed to relate to patentability, to narrow scope, and to create a complete bar to the doctrine of equivalents. *See* 520 U.S. at 33. This understanding avoids resort to "confusing and arguably illogical" presumptions regarding whether prosecution history estoppel applies. Donald S. Chisum, *The Scope of Protection For Patents After the Supreme Court's Warner-Jenkinson Decision: The Fair Protection—Certainty Conundrum*, 14 Santa Clara Computer & High Tech. L.J. 1, 46 (1998) (hereinafter, "*Fair Protection-Certainty*"). If reasons other than patentability can be found for the amendment in the prosecution history,

Exhibit Supply simply restates the clear and unbroken precedent since the 1870 Patent Act. Amendments to claim language were required to be construed to disclaim all of the patentable subject matter of the disclosed invention between the original claim and the amended claim. As a result, the narrowing amendment itself necessarily creates a complete bar to application of the doctrine of equivalents. The patentee may not through the doctrine of equivalents reclaim any patentable subject matter beyond the literal meaning of the amended claim. To find equivalents to the amended element would require imputing to the patent a hypothetical claim that either: (1) would be invalid, because it would claim prior art already in the public domain or because it would lack enabling disclosure; or (2) would "entirely vitiate [the amended] claim element," which disclaims the entire difference. *Warner-Jenkinson*, 520 U.S. at 39 n.8[3]; *see Conopco, Inc. v. May Department Stores Co.*, 46 F.3d 1556, 1562 (Fed. Cir. 1994) (the doctrine of equivalents may not "eviscerate the plain meaning of the limitation").[4]

---

the amendment must still be construed to determine whether it narrows patentable scope and thus whether it completely bars application of the doctrine of equivalents.

[3] *Cf. Fair Protection-Certainty*, 14 Santa Clara Computer & High Tech. L.J. at 37-38 ("In *Warner-Jenkinson*, the Supreme Court did not directly address the issue of dedication by unclaimed disclosure.").

[4] As *Exhibit Supply* held, patentees also may not argue for a narrow literal interpretation of a claim -- a broad disclaimer -- during prosecution of the patent and for a broader interpretation during the infringement trial. Statements made during prosecution thus may limit elements of claims (including an amended element) to embodiments and uses disclosed in the specification. In contrast, elements and claims may normally be construed liberally to include undisclosed enabled -- *i.e.*, foreseeable -- embodiments or uses of compositions of matter and combinations. Embodiments of compositions and combinations may be claimed -- threatening litigation and requiring licenses -- even if undisclosed uses of those compositions and combinations are not enabled. However, unenabled embodiments and uses of compositions or combinations -- "false prophesies" -- should not be claimed. *See Holland Furniture Co. v. Perkins Glue Co.*, 227 U.S. 245, 257-58 (1928) (limiting "functional" claiming of products); *Regents of the University of California v. Eli Lilly & Co.*, 119 F.3d 1559, 1566-69, 1571-74 (1997) (same); *Atlas Powder Co. v. E.I. du Pont De Nemours & Co.*, 750 F.2d 1569, 1574 (Fed. Cir. 1984) (limiting the scope of certain claims, because chemistry is an unpredictable art). Because the Patent Office and courts have improperly allowed claims to unenabled embodiments or uses, the "reverse doctrine of equivalents" exists to protect subsequent non-obvious inventors (although courts in-equitably apply the doctrine only to truly pioneering embodiments). *See* Robert P. Merges & Richard C. Nelson, *Market Structure and Technical Advance: The Role of Patent Scope Decisions*, in Antitrust, Innovation, and Competition at 185, 191-98, 211 & n.131, 212 (Thomas M. Jorde & David J. Teece, eds. 1992) (hereinafter "*Market Structure*"). For enabled embodiments and unenabled (or unclaimed) uses, competitors obtain second-best "blocking patents" for non-obvious uses (but should not for foreseeable uses). *See id.* at 195-96.

B. The Flexible Bar Would Create "Odious" Monopolies and Would Unjustly Enrich Patentees

1. Monopolies That Lack Consideration Are "Odious" And Destroy Competition That Is The Public's "Common Right"

The grant of a U.S. patent creates a monopoly in the patentee to exclude others from making, using, or selling the claimed invention in the United States. 35 U.S.C §§154(a), 271(a). Such a monopoly is not lightly granted. It always comes at great cost to the public. *See Bienville Water Supply Co. v. City of Mobile*, 186 U.S. 212, 220 (1902) (under common law, monopolies "were always deemed odious, not only as being in contravention of common right, but as founded in the destruction of trade by the extinguishment of a free and healthy competition. *Case of The Monopolies*, 11 Coke, 84b."); *cf.* Edward C. Walterscheid, *The Early Evolution of the United States Patent Law: Antecedents (Part 2)*, 76 J. Pat. & Trademark Off. Soc'y 849, 855-80 (1994) (hereinafter "*Antecedents (Part 2)*") (discussing abuses of royal "letters patent" and public outcry that restored power to common law courts to determine patent validity, resulting in the *Case of the Monopolies* and subsequent codification of

common law restrictions in the Statute of Monopolies).

In the seminal American case on publicly granted monopolies, this Court explained that consideration is always required for the monopoly, in order to make up for the corresponding losses to the public:

> A monopoly is that which has been granted without consideration; as a monopoly of trade; or of the manufacture of any particular article, to the exclusion of all competition. It is withdrawing that which is a common right, from the community, and vesting it in one or more individuals, to the exclusion of all others. Such monopolies are justly odious, as they operate not only injuriously to trade, but against the general prosperity of society.

Proprietors of Charles River Bridge v. Proprietors of Warren Bridge, 36 U.S. 420, 567 (1837) (emphasis added). If consideration provided in exchange for a grant of monopoly power is insufficient or wholly lacking, the monopoly is necessarily "odious." *See Antecedents (Part 2)*, 76 J. Pat. & Trademark Off. Soc'y at 853 (under common law, whether a monopoly was illegal "turned always on whether the monopoly grant was perceived to be of benefit to the realm. When not, the monopoly grant was deemed to be odious and was condemned."); *id.* at 878-79 (describing the common law standards codified in the Statute of Monopolies).

2. The Flexible Bar Would Withdraw Patentable Subject Matter From The Public Domain Without Providing Consideration

The U.S. Constitution tolerates -- even encourages -- the grant of a patent excluding all competition in trade or the manufacture of a particular product or process. U.S. Const., art. I, §8. This is because the Founders thought monopoly patents were necessary to "encouraging the rise of manufacturing while at the same time preserving the desired

pecuniary incentive to inventors." Edward C. Walterscheid, *To Promote the Progress of the Useful Arts: American Patent Law and Administration, 1787-1836 (Part 2)*, 80 J. Pat. & Trademark Off. Soc'y 11, 24-25 (1998). However, in exchange for the right to exclude competition, inventors were required to provide valuable consideration to the public. That valuable consideration is the invention's enabling disclosure. *See* 35 U.S.C. §112, ¶1; *Bonito Boats, Inc. v. Thunder Craft Boats, Inc.*, 489 U.S. 141, 151 (1989) (citing *United States v. Dubilier Condenser Corp.*, 289 U.S. 178, 186-87 (1933)).

It is the disclosure of the invention -- and not the fact that the patentee has invented it or "worked" it for the public good -- that provides the required consideration in exchange for which a patent will issue. *See Bonito Boats*, 489 U.S. at 149 (an inventor who "lift[s] the veil of [trade] secrecy, ... must choose the protection of a federal patent or the dedication of his idea to the public at large."); Edward C. Walterscheid, *The Early Evolution of the United States Patent Law: Antecedents (Part 3)*, 77 J. Pat. & Trademark Off. Soc'y 771, 792 (1995) ("the crown came increasingly to recognize that working the invention was no longer the consideration for the patent grant, but that instead a wider dissemination of new skills to the public in general should be the desideratum.").[5] If an inventor fails to teach the public what it has learned, no patent will issue because the inventor provides no consideration to the public for the monopoly grant. Instead, the inventor keeps the profit and potential of the invention for itself and prevents others from building upon that learning to further benefit the public. Similarly, no consideration is provided and no patent should issue if the applicant does not

---

[5] *Cf. id.* at 777-802, 849-50 (discussing common law cases leading to the requirement for a written specification of the invention and to recognition that written disclosure was the "quid pro quo" for the monopoly); *Antecedents (Part 2)*, 76 J. Pat. & Trademark Off. Soc'y at 860-62 (explaining why conflict with the "royal prerogative" eliminated disclosure requirements as of 1399 and delayed their later reemergence).

disclose an "invention," *i.e.*, when what the patent would disclose is already known to the public or is obvious in light of what is publicly known. *See* 35 U.S.C. §§102, 103; *Graham v. John Deere Co.*, 383 U.S. 1, 6 (1966).

As recognized by this Court in *Exhibit Supply*, when making a narrowing amendment, an applicant necessarily disclaims to the public all disclosed subject matter that is not claimed. The flexible bar thus would reclaim subject matter that is already known to and in the hands of the public, because it was placed there by the patentee in the "disclaimed" parts of the specification. The flexible bar would wrest this inventive subject matter from the public domain and would place it in the patentee's hands without any consideration for the taking. By withdrawing the disclaimed subject matter from the public domain and placing it in the hands of the patentee, the flexible bar would create an "odious" monopoly.

3. The Flexible Bar Would Unjustly Enrich Patentees

When prosecuting its patent, the patentee did not ask for but rather expressly disclaimed a monopoly to control the additional subject matter that a flexible bar would place in its hands. To provide the patentee with this disclaimed subject matter during infringement actions would undeservedly and unjustly enrich the patentee at public expense. It is the patentee's own words that disclaimed the patentable subject matter and called forth the competition from which the patentee seeks to be protected.

Unlike in copyright law, it is the patentee's words -- rather than the competitor's words or conduct -- that define the "unimportant and insubstantial changes and substitutions in the patent which, though adding nothing, would be enough to take the ... matter outside the claim, and hence outside the reach of the law." *Graver Tank & Mfg. Co. v. Linde Air Products Co.*, 339 U.S. 605, 607 (1950); *cf. Computer Assocs.*

Int'l., Inc. v. Altai, Inc., 982 F.2d 693, 702-12 (2d Cir. 1992) (discussing non-literal infringement under copyright law). Far from being an "unscrupulous copyist," *Graver Tank*, 339 U.S. at 607, the defendant to non-literal patent infringement has simply taken the patentee at its word and has entered the field to benefit the public. To punish the competitor and the public for accepting the patentee's invitation to enter the unfenced portion of the field would surely make a mockery of patent infringement as a "trespass" on the claim. *See Merrill v. Yeomans*, 94 U.S. 568, 573-74 (1877) ("nothing can be more just and fair, both to the patentee and to the public, than that the former should understand and correctly describe, just what he has invented, and for what he claims a patent.").[6]

C. The Flexible Bar Would Destroy Clear Notice And Would Inexorably Chill Competition

In 1836, Congress created an examination system within the Patent Office, in order to prevent the issuance of patents that failed to disclose enabled inventions or that disclosed known or obvious subject matter that the applicant did not "invent." *See* Act of July 4, 1836, 5 Stat. 117 (hereinafter "1836 Act"); 35 U.S.C. §131. An examination system had been created in 1790, but was subsequently abandoned in 1793 when found to be too burdensome to the senior officials charged with examination. *See* Act of April 10, 1790, 1 Stat. 109; Act of February 21, 1793, 1 Stat. 318. Under the registration system enacted in 1793, many patents had been "fraudulently" issued. Compliance with formalities alone resulted in the issuance of invalid patents that provided no consideration to the public for the monopoly conveyed and were therefore injurious to competition. *See* Edward C. Walterscheid, *To Promote the Progress of the Useful Arts:*

---

[6] *Cf. United States v. Heth*, 7 U.S. 399, 413 (1806) (Paterson, J.) ("[T]he words of a statute [words proscribing conduct], if dubious, ought, in cases of the present kind, to be taken most strongly against the law makers.").

American Patent Law and Administration, 1787-1836 (Part 1), 79 J. Pat. & Trademark Off. Soc'y 61, 62-78 (1997).

The 1790 Act also had required a full and clear disclosure of the invention that would distinguish it from the prior art and would enable others to "make, construct, or use" the invention when the term of the patent expired. Edward C. Walterscheid, *Charting a Novel Course: The Creation of the Patent Act of 1790*, 25 AIPLA Q.J. 445, 447 (1997) (quoting Section 4 of H.R. 10 of 1789, which formed the basis for the 1790 Act's requirement for a contemporaneously filed specification); 35 U.S.C. §112, ¶1. This too proved insufficient to protect the public's right to competition:

> The growth of the patent system in the last quarter of a century in this country has reached a stage in its progress where the ... interests involved require accuracy, precision, and care in the preparation of all the papers on which the patent is founded.

Merrill, 94 U.S. at 573. The boundaries of patented scope and the limits to competition thus had to be more clearly defined.

In 1836, Congress required a patentee to "particularly 'specify and point' out what he claims as his invention." *Winans v. Denmead*, 56 U.S. 330 (1853) (quoting the 1836 Act, §6). This formal requirement for claims, however, did not require a substantive change from prior practice, under which the specification pointed out what was claimed. It thus resulted only in "central claiming," under which the nature of the invention continued to be disclosed by the specification and the claim stated only that the invention was "substantially as described." *Goodyear Dental Vulcanite Co. v. Davis*, 102 U.S. 222, 223 (1880). The Patent Office and courts thus were required to determine the limits of a patent's scope from the specification, rather than from the language of the claims.

In the 1870 Patent Act, however, Congress put a substantive stake through the formalist heart of central claiming. *See* Act of July 8, 1870, ch. 230, §26, 16 Stat. 198, 201 (the applicant "shall particularly point out and distinctly claim the part, improvement, or combination which he claims as his invention or discovery") (emphasis added); 35 U.S.C. §112, ¶2. As this Court subsequently held, failure to include within the claim language all of the patentable subject matter disclosed in the specification resulted in a "disclaimer" to the public, because of the 1870 Act. *See Miller v. Brass Co.*, 104 U.S. 350, 352 (1881) ("an omission to claim other devices or combinations apparent on the face of the patent are, in law, a dedication to the public of that which is not claimed.") (emphasis added). In contrast, disclaimers of patentable scope were logically inconsistent with central claiming, because the claim covered the entire subject matter of the specification.[7]

As a result of the "distinctly claim" requirement of the 1870 Act and its later recognition, "peripheral claiming" developed. Claim language, rather than the specification, now points out the limits of invention to which patent rights attach. The 1870 Act thus made possible a disclaimer of some of the invention disclosed in the specification. *See* William R. Woodward, *Definiteness and Particularity in Patent Claims*, 46 Mich. L. Rev. 755, 760-62 (1948) (it took until 1877, the year *Merrill* was decided, for the change to be acknowledged by the Court). In contrast, the 1836 Act only prevented a patentee from claiming a broader scope of embodiments than was disclosed and enabled or was patentable given the prior art. Thus, in the seminal case on "utility," the Court held that patentees were "required and permitted to disclaim" unenabled embodiments. *O'Reilly v. Morse*, 56 U.S. 62, 120 (1853).

The clarity of patent scope provided by the 1870 Patent Act was the result of a long history of abuse. Congress thought this requirement necessary to assuring that beneficial competition would be preserved in the face of monopolies generated by patents. This conclusion has not changed in the intervening years, and was only recently reasserted:

---

[7] The Court in *Warner-Jenkinson* did not have before it a disclaimer of patentable subject matter when discussing the change from central to peripheral claiming. *See* 520 U.S. at 27 n.4.

> "[T]he limits of a patent must be known for the protection of the patentee, the encouragement of the inventive genius of others and the assurance that the subject of the patent will be dedicated ultimately to the public." ... Otherwise, a "zone of uncertainty which enterprise and experimentation may enter only at the risk of infringement claims would discourage invention only a little less than unequivocal foreclosure of the field," ... and "[t]he public [would] be deprived of rights supposed to belong to it, without being clearly told what it is that limits these rights."

Markman v. Westview Instruments, Inc., 517 U.S. 370, 390 (1996) (quoting *General Elec. Co. v. Wabash Appliance Corp.*, 304 U.S. 364, 369 (1938), *United Carbon Co. v. Binney & Smith Co.*, 317 U.S. 228, 236 (1942), *and Merrill v. Yeomans*, 94 U.S. 568, 573 (1877)) (emphasis added).

The flexible bar would destroy the clear limits of disclaimed patentable subject matter for amended claims, both for the patentee and for competitors. Unlike the amended claim, the limits of a flexible bar can never adequately be predicted in advance of infringement litigation. This uncertainty will, due to the risk of litigation, push competition entirely out of the market defined by the patentable scope of the unamended claim. Competitors may not enter the market or may seek licenses even for disclaimed subject matter that may be unpatentable because of prior art or because of a lack of enabling disclosure.

By chilling competition to the full extent of disclaimed subject matter, the flexible bar in practice will accomplish what it disavows in theory, *i.e.*, to "eviscerate" the amendment that disclaimed patentable scope. The Federal Circuit majority in this case was correct to be concerned as a matter of policy with these practical effects. *See Festo Corp.*, 234 F.3d at 574-78. But the same result is required as a matter of law, as *Miller* held over a century ago.

D. The Flexible Bar Would Discourage Rather Than Promote Investment and Invention

All invention is necessarily sequential, because all inventors build upon prior knowledge.[8] Thus, all "Progress of Science and useful Arts" must reflect the sequential discovery of pre-existing elements and the sequential invention of new ways to combine or transform them. For this reason, patents to "Inventors" for their "Discoveries" may be issued for compositions of matter and for all useful and unobjectionable ways of combining them into products or processes. U.S. Const., art. I., §8; *see* 35 U.S.C. §101.

Because all invention is sequential, a patent monopoly discourages as well as encourages development of both pioneering and incremental inventions.[9] A patent will inhibit sequential invention because competitors will fear an infringement suit[10] or will recognize that even if research is successful a license must be obtained from the patent holder in

---

[8] *See* Suzanne Scotchmer, *Standing on the Shoulder's of Giants: Cumulative Research and the Patent Law*, 5 J. Econ. Perspectives 29 (1991); *cf. Morris v. Bramson*, 1 Carp. P.C. 30, 1 Abbott's P.C. 21, 22 (King's Bench 1776) (Lord Mansfield) (mere improvements in manufactures were patentable, because to hold otherwise "would go to repeal almost every patent that ever was granted.").

[9] *See* Mark A. Lemley, *The Economics of Improvement In Intellectual Property Law*, 75 Tex. L. Rev. 989, 998-1013 (1997) ("creators" are "on both sides of the equation" and improvements on prior patented inventions may be "minor," "significant," or "radical").

[10] *See Market Structure* at 217 ("one must bear in mind that every potential inventor is also a potential accused infringer. Thus, a "strengthening" of property rights will not always increase incentives to invent; it may also greatly increase an inventor's chances of being enmeshed in litigation."); *cf.* Carl Shapiro, Antitrust Limits to Patent Settlements, 3, 29 (May 1, 2001), at www.haas.berkeley.edu/~shapiro/settle.pdf (intellectual property disputes are of increasing importance in determining which firms compete; some competitors will not enter markets in order to compete if there is even a small fixed liability cost of entry).

order to profit from the invention.[11] Accordingly, patent scope at some point becomes overbroad: The prospect of a broad patent monopoly will provide less net incentive to innovate than the prospect of a more narrow patent grant. In such cases, competitors will fear to lose their research investments from patents more than patentees will fear to lose their research investments from competition. *See generally* F.M. Scherer, *Nordhaus' Theory of Optimal Patent Life: A Geometric Reinterpretation,* 62 Am. Econ. Rev. 422 (1972); W.D. Nordhaus, *The Optimum Life of a Patent: Reply*, 62 Am. Econ. Rev. 428 (1972); *cf. Market Structure* at 208 ("technical advance has been very rapid under a regime where intellectual property rights were weak or not stringently enforced. We think [such a] regime is the better social bet.").[12]

---

[11] *See Market Structure* at 195-98, 205-15 (discussing innovation incentives flowing from subservient blocking patents and licensing failures in different industries). The discouragement of follow-on innovation is a particular concern for the fields of pharmaceuticals, biotechnology, computer software, and information services. In these fields, patents may "lock up" basic compositions or methods and ways of combining them, wholly precluding subsequent inventors from research and development or forcing subsequent inventors to pay substantially for licenses to perform research and to develop products using those patents. *See* Arti K. Rai, *Evolving Scientific Norms and Intellectual Property Rights: A Reply to Kieff*, 95 Nw. U. L. Rev. 707, 710-13 (2001). These industries also may exhibit "network effects," where the value of a product to buyers increases with the number of buyers who previously purchased it. Strong network effects can further increase the reward to a patent monopoly and further discourage subsequent innovation. *See Testimony of Joseph Stiglitz Before the Federal Trade Commission*, (Oct. 12, 1995), at www.ftc.gov/opp/global/GC101295.htm (discussing patent scope and network effects).

[12] When patent scope is overbroad, the public loses the benefit (incurs the opportunity cost) of foregone sequential invention that would otherwise have resulted, and must pay the additional cost of monopoly prices for the less useful goods and services produced by the patentee relative to what competitors would have produced. *See* Arti K. Rai, *The Information Revolution Reaches Pharmaceuticals: Balancing Innovation Incentives, Cost, and Access in the Post-Genomics Era,* 2001 U. Ill. L. Rev. 173 (2001); Joseph Farrell, *Arguments for Weaker Intellectual Property Protection in Network Industries,* 3 StandardView 46 (June 1995).

The most comprehensive recent study documents that as patent protections and the number of patents have increased, competitors have increasingly obtained "defensive" patents to protect their research investments against potential infringement challenges and to assure their ability to obtain reasonable licenses from earlier patentees.[13] The potential to prevent copying remains the principle motivation for patenting, but patent protection nevertheless provides only a weak incentive for investment in innovation (with pharmaceuticals, medical equipment, special purpose machines, and computers as the only exceptions).[14] For most industries, patents now rank far below secrecy, lead time advantage, and other measures in regard to inducing research and development investments, and for all industries patents rank below at least one other measure.[15] These concerns are even more salient for small firms and individual inventors,

---

[13] *See* Wesley M. Cohen et al., *Protecting Their Intellectual Assets: Appropriability Conditions and Why U.S. Manufacturing Firms Patent (Or Not),* Nat'l. Bur. of Econ. Res. Working Paper 7552, 16-24 (Feb. 2000), at www.nber.org/papers/w7552 (hereinafter "*Protecting Assets*"); *cf. id.* at 18 (firms that patent the most "are disproportionately concerned about prevention of suits and the use of patents in negotiations"); *id.* at 26-27 ("it is not surprising … that we observe the prevention of suits to be one of the most important uses of patents across all industries, notwithstanding the … technology.").

[14] *See id.* at 9 & Table 1; F.M. Scherer, *Industry Structure, Strategy, and Public Policy* 361-62 (Harper Collins 1996) (citing Richard Levin et al., *Appropriating the Returns from Industrial Research and Development,* Brookings Papers on Economic Activity 783-820 (Brookings 1987)) (hereinafter "*Industry Structure*"); *cf.* Bronwyn H. Hall & Rosemarie H. Ziedonis, *The patent paradox revisited: an empirical study of patenting in the U.S. semiconductor industry,* 1979-1995, 32 RAND J. Econ. 101, 106 (2001) (with greater protection, "there is no *a priori* reason to expect that these increased R&D dollars should yield proportionately more patents.").

[15] *See Protecting Assets* at 9 & Table 1; *cf. Industry Structure*, *supra* at 370-72 (first mover advantages have limited generic pharmaceutical competition even after patents have expired).

which are more sensitive to the costs of infringement litigation and patenting than are large firms.[16]

Existing patent law may already discourage investment and invention -- through the fear and expense of infringement litigation incurred by competitors -- more than patent law promotes investment and invention -- through the protection provided to patentees.[17] Put in economic terms, "[t]he broad issue posed, ... by the pervasive defensive use of patents is whether the social value of patenting is substantially reduced 'because it requires all to assume the overhead of defensive patenting.'"[18] Given this status, the Court should be particularly reluctant to provide additional expansions of patent scope through generally applicable legal doctrines to benefit particular industries. To do so would increase already-high levels of defensive patenting and litigation costs for all industries, and could be redundant for some industries.[19]

---

[16] *See Protecting Assets* at 27; Charles R. Macedo, *First-To-File: Is American Adoption of the International Standard In Patent Law Worth The Price*, 18 AIPLA Q.J. 193, 227-29 (1990).

[17] *See generally* John Barton, *Patents and Antitrust: A Rethinking In Light of Patent Breadth And Sequential Innovation*, 65 Antitrust L.J. 449 (1997).

[18] *See Protecting Assets* at 27 (*quoting Eric von Hippel, The Sources of Innovation* 53 (Oxford U. Press 1988). *See generally* John Barton, *Reforming the Patent System*, 287 Science 1933 (2000).

[19] In particular, the pharmaceutical industry already receives numerous protections against competition and supports for innovation besides the general patent law. For example, Congress: (1) extends drug patent terms to compensate for delays in the regulatory approval of products, and further extends market exclusivity for six months as a reward for conducting pediatric studies, 21 U.S.C. §505A; (2) provides seven years of market exclusivity for "orphan" drugs for patient populations of less than 200,000 persons, 21 U.S.C. §360cc(b); (3) offers tax credits that pay half the cost of clinical trials on orphan drugs, 26 U.S.C. §45C; (4) authorizes special five-year exclusive rights in data used to support FDA regulatory requirements to establish the safety and efficacy of pharmaceutical products, 21 U.S.C. §355(c)(3)(D) (ii); and (5) directly subsidizes and offers grants to commercialize drugs, including the massive investments in research provided by the National Institutes of Health. *See generally* Rebecca S. Eisenberg, *The Shifting Functional Balance of Patents and Drug Regulation*, Health Affairs, Sept. 1, 2001 at 20. If any additional protection and support were demonstrated to be necessary, which is not evident, it is evident that Congress could and would provide it.

The economic literature, however, evaluates the incentive effects of patent scope generally and does not specifically address the incentive effects that would arise from the additional subject matter to be reclaimed by a flexible bar. Existing studies nevertheless provide a persuasive analogy from which to judge the effects of increasing patent monopoly scope through the flexible bar. That analogy suggests that increasing patent scope beyond existing levels through a flexible bar is not likely to increase investment or invention.[20]

As close analysis of incentives regarding amended patent claims demonstrates, moreover, it is unlikely that the flexible bar would promote investment and invention in <u>any</u> industry from the levels that currently exist under the complete bar. This is true whether one looks at the actual patent that would be before a court when applying the flexible bar or at the dynamic incentives that would be produced if this Court were to adopt the flexible bar. In contrast, patentees under the complete bar since 1870 have retained substantial value in amended claims. If the Court retains the complete bar, that value will remain and cannot decrease.[21]

The application of a flexible bar can have <u>no</u> incentive effects for patentees on invention for patents already awarded. A flexible bar cannot retrospectively alter the incentives that

---

[20] *See* Mariko Sakakibara & Lee Branstetter, *Do stronger patents induce more innovation? Evidence from the 1988 Japanese patent law reforms*, 32 RAND J. on Econ. 77, 78 (2001) ("We find no evidence of a ... significant increase in either R&D spending or innovative output that could plausibly be attributed to these reforms," including authorizing multiple independent claims and providing patent term restoration for pharmaceuticals).

[21] The flexible bar will reclaim only patentable scope in excess of the literal meaning of the narrowed (amended) element. Absent further narrowing statements in the prosecution history, that narrowed element may continue to claim and thus to require licenses for undisclosed, enabled -- *i.e.* foreseeable -- embodiments and uses of combinations and of compositions (such as pharmaceuticals). *See supra* note 4.

led patentees to invent, to disclose their inventions, and to claim less than the full scope to which they were statutorily entitled. Similarly, the flexible bar cannot increase patentees' investments in research and development that led to the particular inventions patented or to the scope of subject matter claimed. In contrast, as discussed in Part II *infra*, the flexible bar would raise prices for goods and services and would discourage competitors from inventing for public benefit.

The flexible bar also should not significantly affect dynamic incentives of patentees to invest and invent, and thus to disclose additional innovations for public benefit. Patentees have proved willing under the complete bar to invest and invent, to disclose and disclaim patentable subject matter. Rather than increasing the degree of investment, invention, and disclosure that patentees would provide, the flexible bar would be likely only to reduce incentives for good claim drafting and to provide *ex post* windfall profits above levels previous found sufficient to warrant the research and development capital already invested by patentees.[22] Existing large profits to patentees did not increase investments, inventions, or disclosures from what the patents described. The windfall profits that would be provided by reclaiming scope thus are unlikely to be put to significant inventive uses.

Of greater importance, even if dynamic incentives for patentees to invest and invent would increase, the flexible bar would discourage innovative effort by competitors. It is likely that the latter incentives will prove the greater and thus that net incentives to invest and invent will decrease. This perceived asymmetry is inherent in the application of the flexible bar, resulting from patentees' disclaimers of inventive

[22] *See* Marcia Angell and Arnold S. Relman, *Prescription for Profit*, Washington Post A27 (June 20, 2001) ("The pharmaceutical giants spend two or three times as much on marketing and administration as they do on R&D, and their profits are about twice their R&D costs."); *cf.* F.M. Scherer, *The Link Between Gross Profitability and Pharmaceutical R&D Spending*, Health Affairs, Sept. 1, 2001 at 220 (pharmaceutical firms dissipate supranormal profits by increasing promotional and R&D costs).

subject matter. Patentees will not place as high a value on the disclaimed subject matter of the patented invention as will competitors before patent issuance, sequential invention by competitors, and infringement actions. As a result, competitors are likely to invest more heavily in sequential invention in regard to the disclaimed subject matter. In contrast, no such intuition exists for the contrary proposition that patentees will have greater incentives to sequentially invest and invent.[23]

The conclusion that the flexible bar is likely to confer little or no incentive on the patentee to innovate, while more strongly discouraging successive innovation from competitors, is likely to be even stronger when the competition at issue relates to pioneering inventions. For such inventions, the size of the prize for reclaimed scope is relatively large, and the potential for profits are significantly greater. Thus, the disclaimer will reflect a greater asymmetry of incentives.[24]

These considerations are wholly independent of the current state of relative incentives for patentees and competitors to invest and to invent within a given industry. However, these concerns are even greater for small firms and for individual inventors. (Indeed, small firms and independent inventors may be the greater source of innovation in our economy because an incrementally smaller prize means so

[23] *See* Jonathan B. Baker, *Promoting Innovation Competition Through the Aspen/Kodak Rule*, 7 Geo. Mason L. Rev. 495, 514 (1999) (hereinafter, "*Aspen/Kodak*") (when the legal rule creates a "winner-take-all" decision about whether monopolization will result [such as occurs when expanding patent scope through a flexible bar], vigorous antitrust enforcement [similar to what occurs through the complete bar] "can be expected to encourage fringe firm innovation effort without markedly discouraging dominant firm innovative effort").

[24] On the one hand, "it is [even less]likely that small reductions in the expected return to the dominant [patent-holding] firm would make much difference to that firm's innovative effort and prospects for innovation success, so long as the total reward remains large." *Id.* at 515. On the other hand, reduction in the prizes for innovation to competitors may make large differences to their incentives to innovate. *See Protecting Assets* at 16-24.

much more to them.[25]) Although one would normally be sensitive to protect smaller inventors' abilities to obtain and enforce patents in order to protect and promote their inventive behavior, in this context doing so would likely do more harm than good. If any additional incentives for small businesses and independent inventors to obtain and enforce patents were demonstrated to be necessary, however, Congress should provide them (*e.g.*, by eliminating Patent Office user fees and subsidizing attorneys' fees).[26] In any event, retaining the complete bar cannot make matters any worse.[27]

Finally, even if the flexible bar would provide some net increase in investment and invention, it would still come at too great a cost to the public. *Cf. O'Reilly v. Morse*, 56 U.S. at 120 ("The evil is the same if he claims more than he invented, ... He prevents others from attempting to improve upon the ... specification -- and may deter the public from using it, even if discovered."). The short-run cost counsels judicial restraint, and in the long run Congress or the people can act. The flexible bar thus should not be found to promote the "Progress of Science and useful Arts." U.S. Const., art. I, §8.[28]

---

[25] *Cf.* Joseph J. Cordes et al., *A Survey of High Technology Firms*, U.S. Small Bus. Assn., at 15, Feb. 1999, at www.sba.gov/advo/research/rs189tot.pdf (hereinafter, "*High Technology Survey*") ("small firms perform R&D with less resources per R&D scientist or engineer.... [S]mall firms are more likely to perform basic research than large firms.... [P]er dollar of sales, the R&D intensity of small technology-based firms is greater than the R&D intensity of large firms.").

[26] Again, this Court should not seek to revise the complete bar applicable to all participants in order to benefit one sector, here smaller inventors.

[27] *Cf. Aspen/Kodak*, 7 Geo. Mason L. Rev. at 514 n.75 (in some cases, "the rule may make little difference to aggregate innovation incentives. But even then, it is not likely to reduce aggregate innovative efforts and ... prospects for innovative success.").

[28] *See generally* Pamela Samuelson, *Economic and Constitutional Influences on Copyright Law in the United States*, at www.sims.berkeley.edu/~pam/papers/Sweet&Maxwell_1.htm (economic theory and constitutional influences shape intellectual property law).

II. A FLEXIBLE BAR TO THE DOCTRINE OF EQUIVALENTS FOR AMENDED CLAIMS WOULD HARM THE PUBLIC

The flexible bar would reclaim a monopoly in some of the disclaimed scope of the original claim that was amended, and would create uncertainty in regard to the remainder of the disclaimed scope. The flexible bar thus would discourage and chill competitors from entering the market, fostering higher prices and reducing choices for goods and services. Consequently, these direct and opportunity costs would harm the public. The effects will be most noticeable in important and rapidly developing industries, such as pharmaceuticals, biotechnology, computer software, and information services. These concerns are particularly salient for small businesses and independent inventors, which may provide the greatest source of innovation.

A. A Flexible Bar Would Lead To Higher Prices For Goods and Services

In general, broadening patent monopolies eliminates competition and results in higher prices. Claims are being made and patents are being issued to increasingly broad "inventions" that may later be found invalid.[29] In particular, a

---

[29] *See, e.g.*, Andrew Pollack, *Battling Searle, University Gets Broad Patent for New Painkiller*, NY Times, at www.cif.rochester.edu/~craig/cox2patent.html (describing a broad patent for "Cox 2 inhibitors," which could cover a whole area of new pain-relief medications, which have fewer side effects such as stomach ulcers); *An Alta Vista Search Engine Monopoly?*, January 19, 2001, at www.pandia.com/ searchworld/2001-05-altavista.html (describing how a patent on search engine indexing could create a monopoly on the Internet, because the Internet is essentially a distributed set of indexed databases); *Aggressive Patenting May Stifle Gene Discovery Benefits*, Los Angeles Times, February 8, 2000, at www.tech.mit.edu/V120/N3/shorts_23w.html (explaining how a patent on

flexible bar would broaden a patent monopoly by allowing the patentee to recapture disclaimed subject matter. In addition, the uncertainty of the limits of applying the flexible bar would chill competitors from entering the market between the original and amended claim. With fewer companies in the market, prices would invariably rise. As one public health scholar put it, "[t]he best way to break down price controls is to open up markets."[30]

A visible example of how broad patent scope prevents price competition can be observed from the government's use of compulsory licenses. For example, Cipro -- a drug used to treat antibiotic-resistant anthrax -- was available only from the patentee. Cipro cost $4.67 for the general public and $1.77 for the government. When the government threatened to buy Cipro from generic manufacturers -- using compulsory license authority limited to government uses -- the patentee significantly reduced its price to 95 cents per pill. This price is still far above the price for generics in countries where Cipro is not patented.[31] Similarly, a recent comprehensive study of pharmaceutical competition after the expiration of patent term shows that prices normally drop dramatically when generic manufacturers enter the market.[32]

---

the "BRAC-1" and "BRAC-2" genes – which determine the probability of ovarian and breast cancer -- could stifle the development of tests for breast and ovarian cancer); Craig Bucknell, *British Telecom: We Own Hyperlinking*, June 19, 2000, at wired.com/news/politics/0,1283,37095,00.html (describing a patent that could require Internet service providers to obtain licenses to hyperlink between Internet sites.).

[30] Statement of Steven W. Schondelmeyer, *Prescription Drugs*, at www.gil.house.gov/isspd.htm.

[31] *See* Gardiner Harris, *Bayer's Cipro Will Be Profitable, Even on Discount Deal With U.S.*, Wall St. J., October 26, 2001.

[32] *See* Stephen W. Schondelmeyer, *Patent Extension of Pipeline Drugs: Impact on U.S. Health Care Expenditures* PRIME Institute, July 28, 1999 at www.house.gov/berry/prescriptiondrugs/schondelmeyer.htm (generic drugs enter the market on average 27% lower than the dominant firm price, and after two years the generic price is 61% lower and the generic manufacturer captures 52% of the market (by units sold)). *See also*

Broad patent scope thus prevents competition and keeps prices at often unaffordable levels. With exploding prices for health-care products, many citizens have to choose between purchasing medicine or a meal. For example, Mr. and Mrs. Riley, a couple from St. Louis, are forced to make this unthinkable choice. Mr. Riley is a diabetic with heart trouble and Mrs. Riley suffers from high blood pressure. Given the sky-rocketing cost of drugs and their limited income, Mrs. Riley "admits that she skips her medication as long as a month at a time in order to pay bills."[33] "Life-saving medicines are available but they are too expensive, due in a large part to patent protection."[34]

Similarly, a flexible bar would raise prices both by expanding the patentee's monopoly and by chilling competitor entry into the market beyond the reclaimed scope. For example, in *Pharmacia & Upjohn Company v. Mylan Pharmaceuticals Inc.*,[35] the Federal Circuit completely barred the patentee from reclaiming the disclaimed scope of the amended element. Had the flexible bar rule been in effect, Mylan either would not have produced its anti-diabetic drug or might have been found to infringe the patent. The public, like the Rileys, would have had to pay higher prices for needed

---

Testimony of Bernard Schwetz, Acting Principal Deputy FDA Commissioner before the US Senate Committee on Appropriations Subcommittee on Agriculture, Rural Development, and Related Agencies, May 10, 2001at www.fda.gov/oc/oms/ofm/budget/2002/senatefinalwritten.htm (Statement by Commissioner Schwetz) ("generic drugs substantially reduce the cost of purchasing pharmaceuticals by typically offering price discounts from 50-70%."); Center for Drug Evaluation and Research, *Report to the Nation: Improving Public Health Through Human Drugs*, Food and Drug Admin., U.S. Dept. of Health and Human Servs., at www.fda.gov/cder/reports/ rtn99.htm (generic drugs may be priced between 20 percent and 75 percent of the cost of brand versions).

[33] Matt Dace, *An Impossible Choice: Juggling Medical Needs and Food*, Food Bank at www.stlfoodbank.org/Need/barbara.htm.

[34] Danielle Knight, *WTO Urged to Address Access to Medicine*, TWN Online at www.twnside.org.sg/title/address-cn.htm.

[35] 170 F.3d 1373 (Fed. Cir. 1999).

pharmaceuticals. The public might not be able to afford the reduced competition that would result from the flexible bar.

As with pharmaceuticals, the public would have to pay higher prices for information services if a flexible bar were adopted. In *Bell Atlantic Network Services v. Covad Communications Group,*[36] the public benefited when the Federal Circuit completely barred the doctrine of equivalents to the amended claim element of Bell Atlantic's digital subscribe line (DSL) patent. Had the flexible bar rule been in effect, Covad either would not have provided its DSL service or might have been found to infringe the patent. The public would have been deprived of competition for internet access or would have had to pay higher prices and might not be able to afford them. In fact, this problem already exists, and the flexible bar thus would widen the so-called "digital divide."[37]

In addition to the loss of competition, the flexible bar would cause prices to rise due to the costs of additional litigation and licensing fees. The uncertain application of the flexible bar would generate litigation costs when competitors are not chilled from entering the market. "Based on historical costs, the patent litigation within USPTO and the federal courts begun in 1991 will lead to total legal expenditures (in 1991 dollars) of about $1 billion, a substantial amount relative to the $3.7 billion spent by U.S. firms on basic research in 1991."[38] Firms affected by these high litigation costs (including firms that pay higher insurance costs due to the

[36] 262 F.3d 1258 (Fed. Cir. 2001).

[37] See Mark Lloyd, *Understanding the Digital Divide: A Speech at Audrey Cohen College*, July 10, 2000, at www.civilrightsforum.org/audreycohen.html ("[A]ccording to the latest release of the Department of Commerce report: Falling through the Net, people with a college degree are 16 times more likely to have Internet access than those with only an elementary school education. A high income household in an urban area is 20 times more likely to have Internet access than a rural, low-income household.").

[38] Josh Lerner, *Patenting In The Shadow Of Competitors*, 38 J.L. & Econ. 463, 470 (1995).

risks of litigation) will pass on some portion of the costs of the flexible bar to the public rather than internalize them.

Similarly, the uncertain application of the flexible bar would cause companies to obtain otherwise unnecessary licenses before they enter the market. Patentees may charge high prices to license the expanded patent rights and the subject matter that the patentee does not have a right to claim. For example, in the semiconductor manufacturing industry, "a new manufacturer would need to spend $100-$200 million or 12%-15% of revenues to license what are now considered basic manufacturing principles but which do not transfer any currently useful technology."[39] The costs of similar licenses required by the flexible bar would be passed on to the public through higher prices for the competitors' goods and services.

The flexible bar thus would harm the public by raising prices for needed goods and services that many citizens could not afford. The flexible bar would prevent competition, leading directly to higher prices from the expanded monopoly. Even if competitors would not be not chilled, prices would inevitably rise due to litigation costs and licensing fees.

B. A Flexible Bar Would Lead To Fewer And Poorer Goods and Services And Thus To Fewer Choices

In general, broadening patent monopolies discourages competitors from investing to develop additional and better goods and services. Similarly, a flexible bar would broaden the patentee's monopoly and would create uncertainty as to the limits of patented subject matter. The flexible bar would therefore result in fewer innovations by competitors.

A visible example of how patents prevent beneficial innovation is illustrated by comparison to a jurisdiction that

[39] Symposium, *The Stanford Workshop on Intellectual Property and Industry Competitive Standards: Rapporteur's Report*, Stan. Tech. L. Rev. 1998. at stlr.stanford.edu/STLR/Symposia/Antitrust/99_VS_7/article.htm.

does not recognize certain patents for pharmaceuticals.[40] For example, Cipla Ltd., a drug company in India, created a powerful AIDS drug that is not available in the United States. Cipla created its new drug by combining three drugs, each of which was patented by a different United States company.[41] The result was not only a new product, but also a better product, because those afflicted with the disease have to take one pill rather than three.

Similarly, a flexible bar would prevent innovation and would limit citizen choices both by expanding the patentee's monopoly and by chilling competitor entry into the market beyond the subject matter reclaimed by the flexible bar. For example, in *Glaxo Group Ltd. & GlaxoWellcome, Inc. v. Ranbaxy Pharmaceuticals,*[42] the court applied the complete bar to Glaxo's amended element and allowed Ranbaxy to stay in the market. Had the flexible bar rule been in effect, Ranbaxy would never have entered the market or the court might have required Ranbaxy to exit. Thus, the public would have been denied the choice of an alternative antibiotic.

In addition, the flexible bar would deprive citizens of better products that innovation by competitors can provide. As discussed above, the Federal Circuit applied a complete bar in *Bell Atlantic Network Services,*[43] assuring continued access to Covad's improved DSL technology. The difference from the claimed invention related to Covad's use of "echo cancellation," which permitted two-way communication in a single frequency range over a single channel. Covad's DSL technology was found not to infringe Bell Atlantic's amended claim to unidirectional channels separated by frequency. Had the flexible bar rule been in effect, Covad would not have

---

[40] *See* Jesse Pesta, *India Braces for a Brave New Drug World,* Wall Street J., Mar. 7, 2001, at A17.

[41] *India: Cipla Launches 3-In-1 Aids Pill,* Reuters, at www.dailynews.yahoo.com/h/nm/20010806/h/1/aidspull_1/html.

[42] 262 F.3d 1333 (Fed. Cir. 2001).

[43] 262 F.3d 1258 (Fed. Cir. 2001).

invented its improved technology or the public might have been deprived of an innovation then in existence and use.

Similarly, the flexible bar would restrict development of new applications in the software industry, by increasing the breadth of patent monopolies and by chilling innovation. The flexible bar would effectively discourage technology innovators from creating new products that attach to or that interoperate with patented software that has been widely adopted.[44] For example, innovators could be discouraged from creating new application software that runs in the Microsoft Windows operating environment. To avoid similar results under copyright law, courts have limited the scope of protection for computer program interfaces by applying the "fair use" doctrine in infringement cases involving "reverse engineering." *See, e.g., Sony Computer Entertainment, Inc. v. Connectix Corp.,* 203 F.3d 596 (9th Cir. 2000).[45]

C. A Flexible Bar May Harm Small Businesses And Independent Inventors, Which May Be The Most Important Sources Of Innovation

Concerns that a flexible bar will result in higher prices and reduced choices for the public are most significant for small businesses and independent inventors. Small businesses produce 2.38 times as many innovations per employee as large firms, even though larger firms spend much greater sums on research and development.[46] If a flexible bar were adopted, small businesses and independent inventors may be more likely than larger firms to produce fewer inventions. This is because small businesses would be more sensitive to the high litigation costs of uncertain patent scope that the flexible bar

---

[44] *See* Joseph Farrell, *Standardization and Intellectual Property,* 30 Jurmetrics J. 35 (1989).

[45] *See* John P. Sumner, *The Copyright/Patent Interface: Patent Protection for the Structure of Computer Code,* 30 Jurmetrics J. 107 (1989).

[46] *See High Technology Survey* at 15.

would generate.[47] Small businesses, which often are strapped for money, would have to divert limited resources away from research and development to pay for defensive litigation and licensing.

While larger firms can afford research and development as well as comprehensive patent protections in a particular area, small businesses cannot.[48]

> A large number of high-tech small firms do not share a sentiment for tougher patent protection.... [T]ightening of patent regulations is not as important to small high-technology enterprises as it is to large, R&D-intensive corporations that can hope to blanket entire technology areas through a series of patents under consistent long-term strategies. Such large firms can also afford to maintain expensive patent portfolios, and spend whatever it takes to enforce their legal rights in case of intellectual property problems.[49]

CONCLUSION

In sum, if a flexible bar were adopted, the public would bear the costs of higher prices and foregone invention, because competitors -- particularly small businesses -- would have to spend money on litigation and licensing rather than on research and development. The short-term cost of the flexible bar is simply too great. The Court should not adopt it. For the foregoing reasons, the judgment below should be affirmed.

---

[47] Small firms are also sensitive to the high costs of obtaining and enforcing patents. *See Protecting Assets* at 27; *High Technology Survey* at 58. But small firms should be more concerned about infringing dominant firms' patents, as such larger firms have the greater ability to litigate to enforce those patents and thus to prevent small firms from competing in the market. *See Protecting Assets* at 15-16 (larger firms are better able to spread the fixed costs of applying for and defending patents over greater levels of output).

[48] *See High Technology Survey* at 17-24.

[49] *Id.* at 59 (emphasis added).

Respectfully submitted,

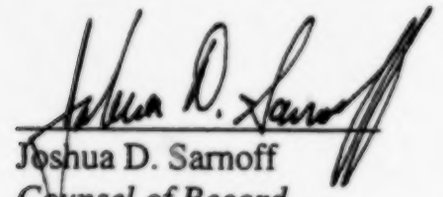

Joshua D. Sarnoff
Counsel of Record
Glushko-Samuelson Intellectual
Property Law Clinic
Washington College of Law
American University
4801 Mass. Ave., NW
Washington, DC 20016
(202) 274-4165
Attorney for Amicus Curaie
Consumer Project on Technology

October 31, 2001

No. 00-1543

IN THE

Supreme Court of the United States

FESTO CORPORATION,

Petitioner,

v.

SHOKETSU KINZOKU KOGYO KABUSHIKI CO., LTD., a/k/a SMC CORPORATION AND SMC PNEUMATICS, INC.,

Respondents.

ON WRIT OF CERTIORARI TO THE UNITED STATES COURT OF APPEALS FOR THE FEDERAL CIRCUIT

BRIEF OF INTERNATIONAL BUSINESS MACHINES CORPORATION, EASTMAN KODAK COMPANY, FORD MOTOR COMPANY, E.I. DU PONT DE NEMOURS AND COMPANY, AGERE SYSTEMS INCORPORATED AND THE FINANCIAL SERVICES ROUNDTABLE AS *AMICI CURIAE* IN SUPPORT OF RESPONDENTS

CHRISTOPHER A. HUGHES
Counsel of Record
MARK J. ABATE
MORGAN & FINNEGAN, L.L.P.
345 Park Avenue
New York, New York 10154
(212) 758-4800

October 31, 2001

(Counsel Continued On Inside Front Cover)

BEST AVAILABLE COPY

FREDERICK T. BOEHM
KEVIN M. JORDAN
PRYOR A. GARNETT
MARK F. CHADURJIAN
IBM CORPORATION
Armonk, New York 10504

J. JEFFREY HAWLEY
ANDREW J. ANDERSON
EASTMAN KODAK COMPANY
ROCHESTER, NEW YORK 14650

WILLIAM J. COUGHLIN
DANIEL M. STOCK
FORD MOTOR COMPANY
Dearborn, Michigan 48121

VERNON R. RICE
BARRY ESTRIN
P. MICHAEL WALKER
E.I. DU PONT DE NEMOURS
AND COMPANY
Wilmington, Delaware 19805

GERALD DEBLASI
RICHARD J. BOTOS
AGERE SYSTEMS INCORPORATED
Berkeley Heights, New Jersey 07922

RICHARD WHITING
THE FINANCIAL SERVICES ROUNDTABLE
805 15th Street, NW
Washington, DC 20005

Attorneys for Amici Curiae

BEST AVAILABLE COPY

TABLE OF CONTENTS

	Page
Table of Authorities	iii
Interest of *Amici Curiae*	1
Introduction and Summary of Argument	2
I. The Experience Of Amici Confirm That The Court Of Appeals' Decision Correctly Balances The Interests Of Patentees And The Public	6
II. With Respect To Question 2, The Court Of Appeals' Decision Is Correct That Where Prosecution History Estoppel Applies It Completely Bars Any Range Of Equivalents	11
III. With Respect To Question 1, The Court Of Appeals' Decision Is Correct That Prosecution History Estoppel Is Created By All Narrowing Amendments Related To Any Statutory Requirement For Patentability	14
IV. Petitioner And Its Proponents Incorrectly Characterize The Impact Of The Court Of Appeals' Decision	17
A. No "Settled Expectations" Of Patentees Or The Patent Office Have Been Upset	17
B. Following *Festo*, District Courts And The Federal Circuit Have Been Careful To Preserve The Doctrine Of Equivalents	20

Contents

		Page
C.	*Festo* Does Not Provide A Roadmap For Copyists	22
D.	Patent Prosecution Will Actually Be Improved	23
E.	Different Treatment For An Amended Claim Versus An Original Claim Is Appropriate	24
F.	The Rebuttable Presumption Of *Warner-Jenkinson* Has Not Been Eviscerated	25
G.	*Festo* Is Not Contrary To Foreign Law And Does Not Violate International Treaties	26
Conclusion		27

TABLE OF AUTHORITIES

Page

Cases:

ACLARA BioSciences, Inc. v. Caliper Tech. Corp., 125 F. Supp. 2d 391 (N.D. Cal. 2000) 20, 21

Bonito Boats, Inc. v. Thunder Craft Boats, Inc., 489 U.S. 141 (1989) 22

Crawford v. Heysinger, 123 U.S. 589 (1887) 16

Creo Prods. Inc. v. Presstek, Inc., C.A. No. 99-525-GMS, 2001 U.S. Dist. LEXIS 6226 (D. Del. May 11, 2001) 21

Exhibit Supply Co. v. Ace Patents Corp., 315 U.S. 126 (1942) 11, 12, 13, 17, 24

Festo Corp. v. Shoketsu Kinzoku Kogyo Kabushiki Co., 234 F.3d 558 (Fed. Cir. 2000) (*en banc*), *cert. granted*, 121 S. Ct. 2519 (2001) ..... *passim*

Graco Children's Prods., Inc. v. Regalo Int'l LLC, No. 97-CV-6885, 2001 U.S. Dist. LEXIS 4737 (E.D. Pa. April 17, 2001) 21

Graver Tank & Mfg. Co. v. Linde Air Prods. Co., 339 U.S. 605 (1950) 2

Hilton Davis Chem. Co. v. Warner-Jenkinson Co., 62 F.3d 1512 (Fed. Cir. 1995), *rev'd*, 520 U.S. 17 (1997) 5, 9

Cited Authorities

	Page
Hubbell v. United States, 179 U.S. 77 (1900)	16
I.T.S. Rubber Co. v. Essex Rubber Co., 272 U.S. 429 (1926)	13
Jackson v. Casio Phonemate, Inc., No. 98 C 6250, 2001 WL 395182 (N.D. Ill. April 17, 2001)	21
Keystone Driller Co. v. Northwest Eng'g. Corp., 294 U.S. 42 (1935)	13
LaBounty Mfg., Inc. v. United States Int'l Trade Comm'n, 867 F.2d 1572 (Fed. Cir. 1989)	7
Litton Systems, Inc. v. Honeywell Inc., 145 F.3d 1472 (Fed. Cir. 1998)	15
Markman v. Westview Instruments, Inc., 517 U.S. 370 (1996)	7, 22
Odiorne v. Winkley, 18 F. Cas. 581 (C.C.D. Mass 1814)	14
Pickholtz v. Rainbow Techs., Inc., 125 F. Supp. 2d 1156 (N.D. Cal. 2000)	26
Pioneer Magnetics, Inc. v. Micro Linear Corp., 238 F.3d 1341 (Fed. Cir. 2001), *petition for cert. filed*, 70 U.S.L.W. 3036 (U.S. May 23, 2001) (No. 00-1765)	26

Cited Authorities

	Page
Robinson v. Fakespace Labs, Inc., No. CIV.A.00-CV-70272-DT, 2001 WL 1057953 (E.D. Mich. Sept. 4, 2001)	21
Smith v. Magic City Kennel Club, 282 U.S. 784 (1931)	10, 12, 13, 17
SRAM Corp. v. AD-II Eng'g, Inc., 155 F. Supp. 2d 826 (N.D. Ill. 2001)	21
Tandon Corp. v. United States Int'l Trade Comm'n, 831 F.2d 1017 (Fed. Cir. 1987)	7
TM Patents, LLP v. IBM Corp., 136 F. Supp. 2d 209 (S.D.N.Y. 2001)	21
Turbocare v. General Electric Co., No. 00-1349, 2001 WL 988030 (Fed. Cir. Aug. 29, 2001)	16, 20
Warner-Jenkinson Co. v. Hilton Davis Chem. Co., 520 U.S. 17 (1997)	*passim*
Weber Elec. Co. v. E.H. Freeman Elec. Co., 256 U.S. 668 (1921)	14
White v. Dunbar, 119 U.S. 47 (1886)	8

Page

Constitution, Statutes And Rules:

U.S. Const. amend. V 19

U.S. Const. art. II 26

Act of July 4, 1836, ch. 357, § 6, 5 stat. 117 14

28 U.S.C. § 1338 20

35 U.S.C. § 2 20

35 U.S.C. § 101 19

35 U.S.C. § 102 19

35 U.S.C. § 103 20

35 U.S.C. § 111 20

35 U.S.C. § 112 ..... 15, 16

35 U.S.C. § 131 19

37 C.F.R. § 10.7(b) 10

Other Authorities:

A. Soobert, *Analyzing Infringement By Equivalents: A Proposal To Focus The Scope Of International Patent Protection*, 22 Rutgers Computer & Tech. L.J. 189 26

Black's Law Dictionary (6th ed. 1990) 13

Page

Brief For The United States As Amicus Curiae, *Festo Corp. v. Shoketsu Kinzoku Kogyo Kabusniki Co.* (No. 00-1543) 4, 12, 15, 16, 18, 21, 22

D. Chisum, *Chisum On Patents* (2000) 14

Manual of Patent Examining Procedure (7th ed. 2000) 19

Petition For Writ Of Certiorari Of The United States, *United States v. Hughes Aircraft Co.* (No. 98-871) 13

R. Faber, *Landis On Mechanics Of Patent Claim Drafting* (2d ed. 1974) 23

R. Faber, *Landis On Mechanics Of Patent Claim Drafting* (4th ed. 1998) 23

R. Harmon, *Patents And The Federal Circuit* (3d ed. 1994) 18

R. Scheinfeld and P. Bagley, *Prosecution of Patents In Light Of The Federal Circuit "Festo" Decision*, New York Law Journal, Jan. 24, 2001 23

R. Weston, Jr., *A Comparative Analysis Of The Doctrine Of Equivalents: Can European Approaches Solve An American Dilemma?*, 39 J.L. & Tech. 35 (1998) 26

BRIEF OF INTERNATIONAL BUSINESS MACHINES CORPORATION, EASTMAN KODAK COMPANY, FORD MOTOR COMPANY, E.I. DU PONT DE NEMOURS AND COMPANY, AGERE SYSTEMS INCORPORATED AND THE FINANCIAL SERVICES ROUNDTABLE[1]

INTEREST OF *AMICI CURIAE*

Amici curiae International Business Machines Corporation, Eastman Kodak Company, Ford Motor Company, E.I. du Pont de Nemours and Company and Agere Systems Incorporated oversee large research and development ("R&D") organizations. These Amici employ thousands in R&D activities, including Nobel laureates, National Medal of Science honorees and National Medal of Technology recipients, at a collective investment of approximately 10 billion dollars a year.

As a result of their commitment to technological research and development, these Amici have received tens of thousands of United States patents including many patents universally recognized as pioneering. IBM alone has received more United States patents than any other assignee in each of the last 8 years. These Amici also manufacture, distribute and sell products resulting from their investment in research and development. As manufacturers, distributors and sellers of products, these Amici are often involved in granting licenses to others under their own patents, evaluating the patents of others, obtaining licenses under patents of others and litigating their own patents as well as patents asserted by others. In each of these endeavors, the potential applicability of the doctrine of equivalents — particularly under the Federal Circuit's previous "flexible" approach to prosecution history estoppel — had been an

---

1. In accordance with Supreme Court Rule 37.6, Amici state that this brief was authored in its entirety by the counsel listed herein. No person or entity other than Amici listed on the cover made a monetary contribution to the preparation or submission of this brief. Letters reflecting written consent of the parties to the submission of this brief have been filed with the Clerk of the Court.

important consideration. As a result, these Amici have had substantial practical experience in dealing with the interplay between the doctrine of equivalents and prosecution history estoppel.

The Financial Services Roundtable is a non-profit industry association which seeks consensus among integrated financial services companies on issues of public and financial policy that shape the competitive marketplace and national economy. Membership in The Financial Services Rountable is limited to the 100 major integrated financial services companies in the United States. The members of The Financial Services Roundtable own patents and have analyzed and licensed patents, particularly patents relating to "business methods" and financial services.[2]

As leading recipients, licensees, licensors and litigants of patents, Amici are committed to maintaining the integrity of United States patent law and to its proper interpretation and application. By virtue of their broad practical experience both from the perspective of a patentee and from the perspective of the public trying to gauge the scope of a patent, Amici believe their views can aid this Court in the resolution of the issues raised in this appeal. Amici submit this brief in support of Respondents and urge this Court to affirm the decision of the Federal Circuit.

INTRODUCTION AND SUMMARY OF ARGUMENT

Just four years ago, this Court recognized the danger of an unchecked doctrine of equivalents noting that "the doctrine of equivalents, as it has come to be applied since *Graver Tank [& Mfg. Co. v. Linde Air Prods. Co.*, 339 U.S. 605 (1950)], has taken on a life of its own, unbounded by the patent claims" and "when applied broadly, conflicts with the definitional and public-notice functions of the statutory claiming requirement." *Warner-Jenkinson Co. v. Hilton Davis Chem. Co.*, 520 U.S. 17, 28-29 (1997).

---

2. For ease of reference, "Amici" is used hereinafter to refer to IBM, Kodak, Ford, DuPont, Agere and The Financial Services Roundtable as representative of its members.

To address those concerns, the *Warner-Jenkinson* Court reaffirmed its precedent that a limiting claim element added by amendment to avoid prior art created prosecution history estoppel barring application of the doctrine of equivalents as to that element. Earlier cases of this Court had consistently applied prosecution history estoppel to "strictly" limit any claim element narrowed by an amendment to avoid prior art — in other words as a complete bar to the doctrine of equivalents for that element. The *Warner-Jenkinson* Court extended the reach of prosecution history estoppel to unexplained claim amendments (*i.e.* amendments not accompanied by remarks stating reasons for the amendments). Specifically, where there is no explanation for a claim amendment, "[a] court should presume that the patent applicant had a substantial reason related to patentability for including the limiting element added by amendment. In those circumstances, prosecution history estoppel would *bar* the application of the doctrine of equivalents as to that element." 520 U.S. at 33 (emphasis added).

Consistent with *Warner-Jenkinson* and this Court's prior cases, the Federal Circuit in this case held that a narrowing amendment to a claim element for "any reason related to the statutory requirements for a patent" will create prosecution history estoppel. *Festo Corp. v. Shoketsu Kinzoku Kogyo Kabushiki Co.*, 234 F.3d 558, 566 (Fed. Cir. 2000) (*en banc*), *cert. granted*, 121 S. Ct. 2519 (2001). The Federal Circuit thus interpreted the expression "a substantial reason related to patentability" in *Warner-Jenkinson*, 520 U.S. at 33 to mean "any reason related to the statutory requirements for a patent." *Festo*, 234 F.3d at 566. Thus, under *Festo*, the doctrine of equivalents remains fully applicable to: (i) all unamended claims, (ii) all unamended elements in a claim, (iii) all amended claim elements that were not narrowed, and (iv) all amended claim elements that were narrowed but not for statutory patentability reasons.

The Federal Circuit also resolved a conflict in its own precedent by rejecting its "flexible" approach to prosecution

history estoppel and held that: "When a claim amendment creates prosecution history estoppel . . . there is no range of equivalents available for the amended claim element. Application of the doctrine of equivalents to the claim element is completely barred (a 'complete bar')." *Festo*, 234 F.3d at 569. The Federal Circuit's reasoning expressly drew on the special expertise it has developed from nearly 20 years of experience in this area:

> Our decision to reject the flexible bar approach adopted in Hughes I comes after nearly twenty years of experience in performing our role as the sole court of appeals for patent matters. In those years, the notice function of patent claims has become paramount, and the need for certainty as to the scope of patent protection has been emphasized. A problem with the flexible bar approach is that it is virtually impossible to predict before the decision on appeal where the line of surrender is drawn.
>
> * * *
>
> After our long experience with the flexible bar approach, we conclude that its "workability" is flawed.

Festo, 234 F.3d at 574-75.

As research and development organizations that own and license significant patent portfolios and as manufacturers, distributors and sellers/providers of products and services that evaluate the patents of others, Amici agree with the Federal Circuit that the workability of the "flexible" approach to prosecution history estoppel is flawed. *See* Brief For The United States As Amicus Curiae at 27, *Festo Corp. v. Shoketsu Kinzoku Kogyo Kabushiki Co.* (No. 00-1543) (Federal Circuit "properly concluded" flexible approach is "unworkable"). The "flexible" approach and the unpredictable results arising from its variable application to claim amendments created substantial uncertainty surrounding the scope of patent claims. *Festo*, 234 F.3d at 577

(under the flexible approach, the "exact range of equivalents when prosecution history estoppel applies is virtually unascertainable").

The zone of uncertainty that resulted from application of the "flexible approach" led to substantial difficulty in planning product launches and other commercial activities, and, in some cases had a chilling effect on the commercialization of technological innovation. For example, bringing a new product or service to market requires massive investment in research, development, manufacturing, distribution and sales. Before making such an investment, companies like Amici encounter situations where they evaluate the patents of others in order to assess the potential risk of an injunction or a damages judgment that could result from patent litigation. Under the "flexible" approach to prosecution history estoppel, Amici and other companies similarly situated could not confidently proceed without risking an adverse judgment based on application of the doctrine of equivalents, even when the patentee narrowed a claim element by amendment to avoid prior art.

Moreover, for many Amici, after they decided to launch a new product or service, the success of that new offering all too often was followed by overbroad allegations of patent infringement. Such allegations were maintained even when literal infringement was unquestionably absent and the claim element required to cover the new product by equivalents was substantively narrowed by amendment. *See Hilton Davis Chem. Co. v. Warner-Jenkinson Co.*, 62 F.3d 1512, 1537 (Fed. Cir. 1995) (Plager, J., dissenting) (doctrine of equivalents is being abused by patentees "seek[ing] greater coverage for their patents than the patent statute grants."), *rev'd*, 520 U.S. 17 (1997). Nevertheless, pressured by the uncertainties created by the flexible approach to prosecution history estoppel, companies like Amici often settled. Unfortunately, these costs were ultimately passed on to the public.

Finally, Amici believe none of the doomsday predictions made by Petitioner's proponents will actually materialize.

For example, no realistic expectation of any prudent patentee will be dashed by strict adherence to prosecution history estoppel, nor will Patent Office practice be adversely affected. To the contrary, Patent Office practice will be improved by submission of better prepared and prosecuted patent applications and the scope of issued patents will be more predictable for patentees and the public alike.

In *Festo*, the Federal Circuit has struck a fair balance between rewarding the inventor's patentable contribution and allowing the public to rely on explicit disclaimers in the form of narrowing amendments made to obtain a patent. Consistent with this Court's directive in *Warner-Jenkinson*, the Federal Circuit's rulings will foster greater "certainty, consistency, and reviewability," 520 U.S. at 39 n. 8, and hence fairness, in administering the patent laws, while still preserving a viable doctrine of equivalents reflecting the realities of the patent application process.

I. THE EXPERIENCE OF AMICI CONFIRM THAT THE COURT OF APPEALS' DECISION CORRECTLY BALANCES THE INTERESTS OF PATENTEES AND THE PUBLIC

Collectively, Amici have first-hand experience with the doctrine of equivalents and prosecution history estoppel from a variety of different perspectives — *i.e.*, that of patentees asserting and licensing patents; that of manufacturers, distributors and sellers/providers of products and services evaluating patents of others; and that of patentee-plaintiffs or accused infringers in litigation. By virtue of that experience, Amici appreciate the need for an appropriate balance between the continuing viability of the doctrine of equivalents to protect inventors' rights and the public interest in promoting the definitional and public notice functions of patent claims.

Amici have extensive and wide-ranging patent portfolios. Amici license their patents to others to generate revenue and to obtain access to patents of others by way of cross-licenses. For example, IBM has one of the largest, if not the largest,

portfolios of active United States patents and generates substantial revenues each year from licensing of its United States patents to hundreds of licensees. Amici also protect their substantial investments in research and development by excluding others from practicing their patents except where royalties are paid or other consideration given to help offset their innovation expenses. DuPont and Kodak in particular frequently assert their patents to protect markets for important products. Amici therefore favor a strong United States patent system and broad patent protection.

However, as manufacturers, distributors and sellers/providers of products and services, Amici are often involved in evaluating the patents of others both before and after launch of new products. In Amici's experience the "flexible" approach to prosecution history estoppel has caused great uncertainty because of the unpredictable results arising from its variable application to claim amendments. This unpredictability occurred even where a claim element was substantively narrowed by amendment to avoid prior art and that element was not present in the new product (*i.e.* no literal infringement).[3] As a result, Amici could not confidently proceed to market. Rather, Amici have been forced to operate under a cloud of uncertainty as to the risk of ultimately being found to have infringed. *See Markman v. Westview Instruments, Inc.*, 517 U.S. 370, 390 (1996) ("'[t]he limits of a patent must be known for the protection of the patentee, the encouragement of the inventive genius of others and the assurance that the subject matter of the patent will be dedicated ultimately to the public.' Otherwise, a 'zone of uncertainty which enterprise and experimentation may enter only at the risk of infringement claims would discourage

3. *See, e.g., Tandon Corp. v. United States Int'l Trade Comm'n*, 831 F.2d 1017, 1026-28 (Fed. Cir. 1987) (prosecution history estoppel did not preclude equivalents despite amendment of claim to avoid prior art); *LaBounty Mfg., Inc. v. United States Int'l Trade Comm'n*, 867 F.2d 1572, 1575-76 (Fed. Cir. 1989) (claim was amended to avoid prior art but court required analysis of prior art to determine extent of subject matter surrendered before invoking prosecution history estoppel).

invention only a little less than unequivocal foreclosure of the field.'. . .") (citations omitted).

Amici believe that the Court of Appeals' decision in *Festo* is correct, as it preserves an appropriate balance between the protection of patentable innovation while providing certainty for the public in planning a course of commercial activity. *See White v. Dunbar*, 119 U.S. 47, 52 (1886) ("The claim is a statutory requirement, prescribed for the very purpose of making the patentee define precisely what his invention is; and it is unjust to the public, as well as an evasion of the law, to construe it in a manner different from the plain import of its terms."); *Warner-Jenkinson*, 520 U.S. at 33 (noting need for "proper deference to the role of claims in defining an invention and providing public notice"). Most companies — such as Amici — conduct their own independent and costly research and development to bring innovative new products and services to market and to gain advantage over their competition. Despite these substantial investments, Amici have been subjected to allegations of patent infringement based on overly broad views of equivalents made possible by the "flexible" approach to prosecution history estoppel.

Amici also believe that the very unpredictability of the flexible approach tended to encourage litigation and produce unfair jury verdicts (and oftentimes excessive damages awards). The abuses observed by the Federal Circuit resulting from unbridled availability of the doctrine of equivalents were highlighted by Judge Lourie:

> It has been said that there is no hard evidence showing that the so-called "flexible" bar impairs predictability. While it is true that empirical data may not be available, powerful evidence may be garnered from the experience of this court, which monthly reviews appeals in which infringement is asserted under the doctrine of equivalents even though the accused product is clearly not within the literal scope of the asserted claims. Many of these

> appeals involve prosecution histories in which amendments for patentability reasons have been made. Yet, equivalence is argued in the hope that one panel might find equivalence where another would not. That surely is persuasive evidence that the current flexible bar is not working.

Festo, 234 F.3d at 596 (Lourie, J., concurring). Similarly, Judge Plager has stated:

> [t]he doctrine of equivalents is a virtually uncontrolled and unreviewable license to juries to find infringement if they so choose. And this is done largely without regard to and independent of the express limitations of the patent claims which may have brought about their allowance by the Patent and Trademark Office (PTO) in the first place.

Hilton-Davis, 62 F.3d at 1538 (Plager, J., dissenting) (citation omitted). *See Festo*, 234 F.3d at 576 (flexible approach is "a benefit [to the patentee] that comes at the public's expense.").

Prosecution history estoppel is a question of law. However, in practice, the "flexible" approach to prosecution history estoppel was typically considered to have raised issues of fact concerning what an applicant actually surrendered during prosecution in relation to the product accused of infringement. Consequently, district courts had been reluctant to grant summary judgment of noninfringement, and patent infringement cases would persist, simply because of the theoretically possible need to resolve these fact issues. Thus, confident that their cases could withstand summary judgment, patentees with questionable or unmeritorious cases felt little or no constraint in pursuing litigation. Those patentees knew full well that the mere pendency of a suit, with its attendent threat of a large damages award or an injunction against an important product or service, could induce a company to pay a large settlement. Even companies that fought and won often found their victories Pyrrhic, because of the expense of patent litigation. The Federal Circuit has now restored prosecution history estoppel as an effective legal limit

on the doctrine of equivalents which district courts will use more confidently to summarily decide cases where the prosecution history demonstrates that resort to the doctrine of equivalents should be barred. *See Warner-Jenkinson*, 520 U.S. at 39 n. 8.

Contrary to the position of Petitioner and its proponents, the Federal Circuit ruling is not unfair to patent applicants. Patent applicants have many options during prosecution before the Patent Office — they can: (i) amend their claims; (ii) argue for patentability without amending claims; or (iii) appeal through the Patent Office and to the Federal Circuit if they believe the patent examiner is incorrect. *See Smith v. Magic City Kennel Club*, 282 U.S. 784, 789-90 (1931) ("If dissatisfied with the rejection [the patentee] should pursue his remedy by appeal; and where, in order to get his patent, he accepts one with a narrower claim, he is bound by it.") (citations omitted); *Festo*, 234 F.3d at 597 (Lourie, J., concurring) (a patent applicant "is master of his claims. He can stand his ground and appeal, or amend the claims. If the latter course of action is chosen, such conduct, which is known to the world, should bind the applicant."). Patent practitioners are well aware of these various options and when each ought to be used.[4] When a patentee opts to amend a claim in order to obtain a patent, the patentee has struck a bargain with the Patent Office and thereby accepted the amended claims as a fair reward for the disclosed invention in light of the prior art and other statutory requirements of patentability. The patentee should be held to its bargain and the public should be entitled to rely on it.

By restoring application of prosecution history estoppel as a complete legal bar to the doctrine of equivalents in accordance with long-standing Supreme Court authorities, *see* Section II, *infra*, the Federal Circuit has brought the doctrine of equivalents

4. To practice before the Patent Office, an attorney, regardless of state or federal court bar admissions, is required to take and pass the Patent Office agency examination. 37 C.F.R. § 10.7(b). The Patent Office is the only federal government agency that has its own licensing examination.

and prosecution history estoppel back into appropriate balance. The inventor's patentable contribution is still rewarded — as measured by the claims and agreement reached during prosecution — because the doctrine of equivalents remains fully available to all claim elements not narrowed for statutory patentability purposes and, of course, literal infringement is always available. The public, on the other hand, gains because it can objectively determine the reach of a patent with much greater certainty and plan its commercial activities with far greater confidence, all based on the public record created before the Patent Office. The greater "certainty, consistency and reviewability" fostered by the Federal Circuit's decision will strengthen the United States patent system.

II. WITH RESPECT TO QUESTION 2, THE COURT OF APPEALS' DECISION IS CORRECT THAT WHERE PROSECUTION HISTORY ESTOPPEL APPLIES IT COMPLETELY BARS ANY RANGE OF EQUIVALENTS

The Federal Circuit's ruling that prosecution history estoppel, when it applies, completely bars any range of equivalents for the amended claim element is fully supported by *Warner-Jenkinson* and this Court's other modern precedent. Collectively, these precedent have characterized the effect of prosecution history estoppel as a "bar", a "disclaimer" and an "abandonment", which should be "strictly construed" against the patentee.

The leading modern Supreme Court case on prosecution history estoppel, *Exhibit Supply Co. v. Ace Patents Corp.*, 315 U.S. 126 (1942), held that by making a narrowing amendment to a claim element to avoid prior art, the patentee had affirmatively abandoned any subject matter between the claim element as originally claimed and as amended, precluding any range of equivalents for that claim element: "By the amendment [the patentee] *recognized and emphasized the difference* between the two phrases *and proclaimed his abandonment of all that is embraced in that difference*." *Id.* at 136 (citations omitted,

emphasis added). The *Exhibit Supply* Court emphasized the gravity of such a disclaimer:

> *The difference* which he thus disclaimed *must be regarded as material*, and *since the amendment operates as a disclaimer of that difference it must be strictly construed against him* . . . It follows that *what the patentee*, by a strict construction of the claim, *has disclaimed* — conductors which are carried by the table but not embedded in it — *cannot now be regained by recourse to the doctrine of equivalents*, which at most operates, by liberal construction, to secure to the inventor the full benefits, not disclaimed, of the claims allowed.

Id. at 137 (citations omitted, emphasis added). *See* Brief For The United States As Amicus Curiae at 24, *Festo* (No. 00-1543) (citing *Exhibit Supply* for the proposition that "when a patent applicant submits a narrowing amendment to avoid prior art, the applicant by necessary implication disclaims the range of equivalents that falls between the original and the amended claims").

Similarly, in the earlier case of *Smith v. Magic City Kennel Club, Inc.*, 282 U.S. 784 (1931), this Court determined that since the patentee narrowed a claim element to avoid prior art, the patentee had made a disclaimer which must be "strictly construed" against it:

> The applicant having *limited his claim by amendment* and accepted a patent, brings himself within the rule[s] that . . . limitations imposed by the inventor, especially such as were introduced into an application after it had been persistently rejected, *must be strictly construed against the inventor and looked upon as disclaimers.*

Id. at 790 (citations omitted, emphasis added).

More recently, in the circumstance where there was no explanation for an amendment, the *Warner-Jenkinson* Court

characterized the effect of prosecution history estoppel as a presumptive bar on the doctrine of equivalents:

> Where no explanation is established, however, the court should presume that the patent applicant had a substantial reason related to patentability for including the *limiting element added by amendment*. In those circumstances, prosecution history estoppel would *bar the application of the doctrine of equivalents* as to that element.

520 U.S. at 33 (emphasis added). *See* Petition For Writ Of Certiorari Of The United States at 14-15, *United States v. Hughes Aircraft Co.* (No. 98-871) (*Warner-Jenkinson* "unambiguously states that, if a patent applicant adds a limiting element to a patent claim for 'a substantial reason related to patentability,' then 'prosecution history estoppel would *bar* the application of the doctrine of equivalents as to that element'"; the flexible approach "conflicts with the 'blunt and clear' words of *Warner-Jenkinson*."). Amici understand this Court's use of the word "bar" was no mistake, as Petitioners and their supporters argue by implication. Rather, it stands as a confirmation of its long-standing precedent that prosecution history estoppel completely "defeats, annuls, cuts off, or puts an end to" the doctrine of equivalents as to an amended claim element. *Black's Law Dictionary* 148 (6th ed. 1990).

Exhibit Supply and *Magic City Kennel Club* are part of a long line of 20th Century Supreme Court cases strictly applying prosecution history estoppel to bar any range of equivalents for claim elements that were narrowed by amendment to avoid prior art.[5] *Warner-Jenkinson* applied the logic of these earlier

5. *See, e.g., I.T.S. Rubber Co. v. Essex Rubber Co.*, 272 U.S. 429, 443-44 (1926) (claim amendments "must be strictly construed against the inventor and looked upon as disclaimers"); *Keystone Driller Co. v. Northwest Eng'g. Corp.*, 294 U.S. 42, 48-49 (1935) ("we do apply the principle that, where such broad claims are denied and a narrower substituted, the patentee is estopped to read the granted claim as the (Cont'd)

decisions to unexplained amendments, reiterating the effect of prosecution history estoppel as a "bar". Notwithstanding the dicta from 19th Century cases cited by Petitioner and its proponents,[6] this Court's modern cases have consistently applied this principle. The Federal Circuit in *Festo* correctly aligned itself with this Court's precedent.

Accordingly, the Federal Circuit was correct in holding that prosecution history estoppel, once found with respect to an amended claim element, completely bars application of the doctrine of equivalents to that claim element.

III. WITH RESPECT TO QUESTION 1, THE COURT OF APPEALS' DECISION IS CORRECT THAT PROSECUTION HISTORY ESTOPPEL IS CREATED BY ALL NARROWING AMENDMENTS RELATED TO ANY STATUTORY REQUIREMENT FOR PATENTABILITY

There can be no dispute that where a narrowing amendment is made to a claim element in order to avoid prior art, prosecution history estoppel is created. As to whether the estoppel arises for narrowing amendments related to all statutory requirements for patentability — not just those made to avoid prior art — Amici

(Cont'd)
equivalent of those which were rejected. . . . In other words, we find no justification for enlarging the scope of what is described, but rather the requirement of strict limitation to that which is specified. . . ."); *Weber Elec. Co. v. E.H. Freeman Elec. Co.*, 256 U.S. 668, 677-78 (1921) ("Having thus narrowed his claim against rotary movement in order to obtain a patent the patentee may not by construction, or by resort to the doctrine of equivalents, give to the claims the larger scope which it might have had without the amendments, which amount to a disclaimer of rotation as an operative feature of his device.").

6. None of the cases cited by Petitioner actually holds infringement under the doctrine of equivalents. *Festo*, 234 F.3d at 571. One of the cases cited by Petitioner, *Odiorne v. Winkley*, 18 F. Cas. 581 (C.C.D. Mass 1814), is inapposite because it was decided over 20 years *before* patent claims were statutorily required. Act of July 4, 1836, ch. 357, § 6, 5 stat. 117; *see* D. Chisum, *Chisum On Patents* § 8.02 (2000).

believe the Federal Circuit was correct. The statutory requirements of patentability provide the most objective and logical standard for determining whether an amendment was made for "a substantial reason related to patentability." *Warner-Jenkinson*, 520 U.S. at 33.

The Federal Circuit concluded that an amendment made to overcome a non-prior art rejection will create prosecution history estoppel if it "narrows the scope of [the] claim for any reason related to a statutory requirement for a patent." *Festo*, 234 F.3d at 566. That conclusion follows directly from *Warner-Jenkinson* which ruled that an unexplained "limiting element added by amendment" is presumed to have been made for patentability purposes and, unless rebutted, will invoke prosecution history estoppel. 520 U.S. at 33. Since an unexplained amendment presumptively creates prosecution history estoppel, that estoppel must also logically be created by a claim element narrowed by amendment where the prosecution history makes clear that the amendment was made for a "substantial reason for patentability" — whether or not related to prior art. *Litton Systems, Inc. v. Honeywell Inc.*, 145 F.3d 1472, 1475-76 (Fed. Cir. 1998) (Garjarsa, J., dissenting from denial of rehearing *en banc*) ("It defies logic to read *Warner-Jenkinson* to hold that an amendment that is known to have been made for patentability reasons is to be treated differently than an amendment that is presumed to have been made for patentability reasons."). *See* Brief For The United States As Amicus Curiae at 15, *Festo* (No. 00-1543) (Federal Circuit holding has "compelling force" because "it should not matter whether the impetus was a prior art rejection or some other patent law requirement.").[7] Thus, for example, narrowing claim amendments made in response to a rejection under Section 112 paragraph 1[8] (claim not adequately described

7. Petitioner's assertion that the title of chapter 10 of the Patent Code is determinative of what qualifies as a "patentability" reason truly elevates form (a section title in the Patent Code) over substance (all of the substantive statutory requirements for the grant of a patent).

8. 35 U.S.C. § 112 ¶1.

or enabled by the patent specification) should create prosecution history estoppel. *See Crawford v. Heysinger*, 123 U.S. 589, 602-07 (1887) (prosecution history estoppel applied to amendment made in response to a rejection for inoperability).

However, consistent with *Warner-Jenkinson*, not all amendments create prosecution history estoppel. Claim amendments made in response to an indefiniteness rejection under Section 112 paragraph 2[9] either to correct grammatical errors or provide proper antecedent basis would not ordinarily be considered narrowing and thus not create prosecution history estoppel. *See Hubbell v. United States*, 179 U.S. 77, 80 (1900) ("where the differences between the claim as made and as allowed consist of mere changes of expression, having substantially the same meaning, such changes, made to meet the views of the examiners, ought not to be permitted to defeat a meritorious claimant.").

Consistent with *Hubbell* and this Court's other precedent, the Federal Circuit's holding leaves entirely intact the doctrine of equivalents with respect to all claim elements that were not narrowed by amendment to satisfy a statutory requirement for patentability. *Festo*, 234 F.3d at 567-68 ("if a patent holder can show from the prosecution history that a claim amendment was not motivated by patentability concerns, the amendment will not give rise to prosecution history estoppel"); Brief For The United States As Amicus Curiae at 15-16, *Festo* (No. 00-1543); *see, e.g., Turbocare v. General Electric Co.*, No. 00-1349, 2001 WL 988030 (Fed. Cir. Aug. 29, 2001) (doctrine of equivalents not barred because amendment of claim not narrowing). Thus, the doctrine of equivalents remains fully applicable to: (i) all claims that have not been amended, (ii) all unamended elements in a claim, (iii) all amended claim elements that were not narrowed (*e.g.* an amendment that broadens a claim by deleting a term or element), and (iv) all amended claim elements that were narrowed but not for statutory patentability reasons.

9. 35 U.S.C. § 112 ¶2.

Amici believe that it is both logical and balanced to impose prosecution history estoppel on narrowing amendments: (i) made to avoid the prior art as in *Exhibit Supply* and *Magic City Kennel Club*; (ii) made without explanation as in *Warner-Jenkinson*; and (iii) acknowledged to have been made to satisfy any statutory prerequisite for a patent — prior art or otherwise. The definitional and notice functions of patent claims are implicated whenever claims are amended to satisfy any statutory requirement for a patent, not just when the reason relates to prior art. The patent applicant is the "master of his claims" and should, on balance, bear the consequences of amending those claims.

IV. PETITIONER AND ITS PROPONENTS INCORRECTLY CHARACTERIZE THE IMPACT OF THE COURT OF APPEALS' DECISION

A. No "Settled Expectations" Of Patentees Or The Patent Office Have Been Upset

Petitioner and its proponents have argued that the Federal Circuit upset "settled expectations" of the owners of 1.2 million extant patents.[10] Amici disagree. There never were or should have been any settled expectations of equivalents with respect to claim elements narrowed by amendment for patentability reasons during prosecution. First, the precedent of this Court consistently applied the complete bar to any limiting element added to avoid prior art. *See* Section II, *supra*. Second, since the Federal Circuit had developed two lines of authority over the last 20 years — the "flexible" approach to prosecution history estoppel and the complete bar — its own authority was inconsistent. Such inconsistency could not have led to any reasonable expectation at all with regard to the doctrine of equivalents. Not only was the Federal Circuit unpredictable in applying prosecution history estoppel, but its "flexible" approach

10. 1.2 million is a gross exaggeration of the number of patents actually affected by the Federal Circuit decision. First, a substantial number of patent claims, and even more individual elements of patent claims, pass through the Patent Office without being amended. Second, only a fraction of the 1.2 million patents are ever asserted.

was misaligned with the long-standing precedent of this Court. Moreover, throughout the past two decades, well-respected commentators have warned patent practitioners to exercise due care in patent prosecution because a claim amendment may bar resort to the doctrine of equivalents.[11]

Thus, there could not reasonably have been any "settled expectations" that were upset by *Festo*. *See* Brief For The United States As Amicus Curiae at 24, *Festo* (No. 00-1543) ("patent holders have been on notice that they cannot assume, without considerable risk, that a narrowing amendment, made to overcome a patentability rejection, will embrace more than its literal terms.").[12] In fact, Judge Lourie, reflecting the Federal Circuit's many years of experience in this area, convincingly addressed any notion that patentees had settled expectations in the "flexible" approach to prosecution history estoppel:

> It has been suggested that there are settled expectations in the bar and innovation community regarding the present rule. The only settled expectation currently existing is the expectation that

11. *See, e.g.*, R. Harmon, *Patents And The Federal Circuit* § 6.3(b) (3d ed. 1994) (prosecution history estoppel "bars a patentee from construing its claims in a way that would resurrect subject matter previously surrendered during prosecution of the patent application. It limits a patentee's reliance upon the doctrine of equivalents by preventing it from contending later that its claims should be interpreted as if limitations added by amendment were not present or that claims abandoned are still present.").

12. Petitioner's argument that these 1.2 million patents "were freely amended to satisfy the examiners" with no intended consequences is unrealistic and unfair to the public. *See* n. 4, *supra*, and accompanying text. If applicants really did amend their claims "freely" in order to get a patent granted, with an expectation that whatever changes they made could be recaptured by the doctrine of equivalents, then it is both the statutory requirement for precise claiming and the principle of prosecution history estoppel that have each been reduced to a "hollow thing", with the doctrine of equivalents providing an unfettered failsafe mechanism by which patentees can avoid accountability for limiting amendments.

> clever attorneys can argue infringement outside the scope of the claims all the way through this court of appeals. Such a settled expectation should become unsettled. Surely, when prosecuting a patent, patent practitioners have no settled expectations of being able to assert the doctrine of equivalents. Any patent attorney who fails to claim all that his inventor has invented, and that is patentable, is ill-advised to settle for a narrower claim than he considers justified on the assumption that he can rely on the doctrine of equivalents for broader coverage. Such reliance is a highly risky prospect given that the patent statute requires precise claims.

Festo, 234 F.3d at 596-97 (Lourie, J., concurring) (citation omitted).[13]

Petitioner and its proponents have suggested that the Patent Office examines and grants patent applications with an expectation of equivalents. Once again, Judge Lourie rejected that argument:

> [T]he PTO does not make "basic assumptions" relating to a range of equivalents to be allowed. The PTO examines claims in light of the disclosure of the patent application and against the prior art. *See* 35 U.S.C. § 131 (1994) ("Examination of application"); Manual of Patent Examining Procedure §§ 701, 702 (7th ed. 2000) ("The main conditions precedent to the grant of a patent to an applicant are set forth in 35 U.S.C. [§§] 101, 102

13. Petitioner and its proponents also argue that the Federal Circuit's decision is tantamount to a Fifth Amendment taking and should not be applied to extant patents. Because there were no reasonable settled expectations in the flexible approach to prosecution history estoppel, that argument is incorrect. Moreover, Amici submit that Petitioner's arguments would apply equally to the presumption of prosecution history estoppel applicable to unexplained amendments established by this Court in *Warner-Jenkinson*. The Court did not create an exception for extant patents in that case and there is no reason to do so here.

> and 103 .... [T]he examiner should review the contents of [a new] application to determine if the application meets the requirements of 35 U.S.C. [§] 111(a) [(setting forth the basic requirements for a patent application)].''). It does not issue patents with any expectations regarding equivalents.

Festo, 234 F.3d at 597 (Lourie, J., concurring) (citation omitted).

That the Patent Office does not, indeed is not empowered to, consider the doctrine of equivalents flows from the fact that the doctrine of equivalents is a judicial instrument of patent enforcement rather than patent examination. Enforcement of patents is the exclusive jurisdiction of the district courts; the Patent Office only examines and issues patents. *Compare* 28 U.S.C. § 1338 (exclusive jurisdiction of district courts in patent infringement cases) *with* 35 U.S.C. § 2 (authority of Patent Office to grant patents).

B. Following *Festo*, District Courts And The Federal Circuit Have Been Careful To Preserve The Doctrine Of Equivalents

Petitioner and its supporters also argue that the Federal Circuit has obliterated the doctrine of equivalents. The brief case law history since *Festo* has shown that this is simply not true. Consistent with *Warner-Jenkinson* and *Festo*, the lower courts have been carefully interpreting the breadth and applicability of prosecution history estoppel to avoid barring meritorious claims from application of the doctrine of equivalents. For example, in *Turbocare*, 2001 WL 988030, the court closely examined an amended claim element in view of the teachings of the patent specification and determined that it was not narrowed and thus the doctrine of equivalents was not barred. In *ACLARA BioSciences, Inc. v. Caliper Tech. Corp.*, 125 F. Supp. 2d 391 (N.D. Cal. 2000), the court determined that a single clause in a claim contained several independent elements, only one of which was narrowed by an amendment. Accordingly, the court held that prosecution history estoppel only applied to the element narrowed by amendment, not to the

larger claim clause containing the element. *Id.* at 403. Other recent cases similarly illustrate the continuing vitality of the doctrine of equivalents.[14] *See also* Brief For The United States As Amicus Curiae at 15-16, *Festo* (No. 00-1543).

On the other hand, the *Festo* holding has been applied in other cases that demonstrate the appropriateness of invoking prosecution history estoppel to bar resort to the doctrine of equivalents for a narrowed claim element.[15]

As these cases and others proceed through the district courts and Federal Circuit, there will undoubtedly be further refinements to the doctrine of equivalents and prosecution history estoppel as anticipated by this Court in *Warner-Jenkinson*. They do not signal the doom of the doctrine of equivalents but rather its continued use and vitality as part of the patent law.

---

14. *See, e.g., TM Patents, LLP v. IBM Corp.*, 136 F. Supp. 2d 209, 219 (S.D.N.Y. 2001) (prosecution history estoppel only applied to narrowed functional portion of a means-plus-function claim element); *Creo Prods. Inc. v. Presstek, Inc.*, C.A. No. 99-525-GMS, 2001 U.S. Dist. LEXIS 6226, at *34 (D. Del. May 11, 2001) (narrowing amendment limiting movement of an imaging head vis-à-vis a cylinder did not create prosecution history estoppel as to images that can result from the movement); *Graco Children's Prods., Inc. v. Regalo Int'l LLC*, No. 97-CV-6885, 2001 U.S. Dist. LEXIS 4737, at *10-13 (E.D. Pa. April 17, 2001) (prosecution history estoppel did not apply to a clarifying amendment); *SRAM Corp. v. AD-II Eng'g., Inc.*, 155 F. Supp. 2d 826, 837-38 (N.D. Ill. 2001) (prosecution history estoppel did not apply to amendment of patent specification, not the claim).

15. *See, e.g., Jackson v. Casio Phonemate, Inc.*, No. 98 C 6250, 2001 WL 395182, at *2 (N.D. Ill. April 17, 2001) (barring doctrine of equivalents where patentee narrowed claim to "more clearly distinguish[]" prior art); *Robinson v. Fakespace Labs, Inc.*, No. CIV.A.00-CV-70272-DT, 2001 WL 1057953, at *2 (E.D. Mich. Sept. 4, 2001) (barring doctrine of equivalents where claim amended to add a feature "critical to the invention" in response to prior art rejection).

C. *Festo* Does Not Provide A Roadmap For Copyists

Petitioner asserts that "the Federal Circuit has dealt the U.S. patent system a crippling blow" because "would-be competitors need only find an amended claim element in a patent, make an insubstantial change, and thereby deny the patentee protection." Brief For Petitioner at 42. Amici disagree. The definitional and public notice functions of patent claims facilitate the introduction of a myriad of new commercial products and processes that Petitioner would deny the public. It is indisputable that one of the purposes of the patent system is to encourage innovation. "Designing around" patents has long been acknowledged as one form of innovation. *See Bonito Boats, Inc. v. Thunder Craft Boats, Inc.*, 489 U.S. 141, 146 (1989) ("From their inception, the federal patent laws have embodied a careful balance between the need to promote innovation and the recognition that imitation and refinement through imitation are both necessary to invention itself and the very lifeblood of a competitive economy."); *Warner-Jenkinson*, 520 U.S. at 36; *Markman*, 517 U.S. at 390 (limits of a patent must be known to "encourage[] the inventive genius of others."). To the extent *Festo* encourages innovation by designing around, that is a recognized incentive, not a detriment.

Petitioner's argument rests on the false assumption that little thought goes into drafting and amending patent claims. Again, this is simply not true. Patent attorneys have every incentive, and the specialized expertise, to approach claim drafting and amending with utmost care. *See* ns. 4 and 11, *supra*, and accompanying text; Brief For The United States As Amicus Curiae at 24, *Festo* (No. 00-1543) ("When a patent applicant is faced with a rejection, the applicant has a particularly powerful incentive to frame its narrowing amendment as expansively as possible and to avoid surrendering any more subject matter than necessary to secure the patent. . . . [Applicants] must correspondingly draft their amendments with care."). Indeed, the experience of Amici is that a well constructed patent claim is very difficult to design around, even as to literal infringement.

This argument, and other arguments of Petitioner and its proponents, incorrectly presumes widespread incompetence on the part of patent attorneys. On the contrary, the patent bar is a highly skilled and highly trained group which does not haphazardly make amendments without consideration of their limiting effect. *See* ns. 4 and 11, *supra*, and accompanying text.

D. Patent Prosecution Will Actually Be Improved

Perhaps, as some have suggested, the Federal Circuit's decision will raise the stakes of patent prosecution and will result in tougher battles in the Patent Office over patentability. If that is the case, so be it. *See Festo*, 234 F.3d at 597 (Lourie, J., concurring) ("The fact that the applicant may have to appeal an unjustified rejection, incurring loss of time and expense, does not mean that we should refrain from adding clarity to the meaning of claims by holding patent applicants to their actions in the Patent and Trademark Office.").[16]

Holding patentees to representations made to the Patent Office provides incentive for patent applicants to assess the potential patentability of their inventions more realistically and craft the scope of initial patent claims on that basis. The Federal Circuit ruling encourages patent applicants to perform pre-filing prior art searches and file more realistic claims in their original

16. Contrary to Petitioner's assertion, Amici believe that *Festo* will not greatly impact patent prosecution practices. In Amici's experience, *Festo* has merely caused reemphasis of a number of well-worn good patent prosecution practices. Note the consistency of R. Faber, *Landis On Mechanics Of Patent Claim Drafting* § 57 (2d ed. 1974) (recommending filing a patent application with claims of varying scope); R. Faber, *Landis On Mechanics Of Patent Claim Drafting* § 60 (4th ed. 1998) (same); and R. Scheinfeld and P. Bagley, *Prosecution of Patents In Light Of The Federal Circuit "Festo" Decision*, New York Law Journal, Jan. 24, 2001, at 3 ("It would seem more important than ever to do a thorough preapplication search to identify the existing prior art so that it can be distinguished in the originally presented claims. It is a good practice to draft different sets of claims with varying claim scope and most favorably, varying claim styles and features.").

patent applications to avoid narrowing claim amendments during prosecution. Patent scope should not be treated as an interim determination that can be reevaluated *de novo* years later when the incentive for litigation arises, but should be decided in the Patent Office. *Festo* encourages precisely this end.

E. Different Treatment For An Amended Claim Versus An Original Claim Is Appropriate

Petitioner and its proponents have argued that the Federal Circuit ruling is not logical because, as a hypothetical, an allowed original claim and an amended claim having the same language would be treated differently for purposes of the doctrine of equivalents. The *Exhibit Supply* Court, considering this very issue, ruled that such different treatment is appropriate because in the case of an amended claim, the patentee had joined issue with the patent examiner during prosecution of the patent:

> Assuming that the patentee would have been entitled to equivalents embracing the accused devices had he originally claimed a "conductor means embedded in the table," *a very different issue is presented when the applicant in order to meet objections in the Patent Office, based on references to the prior art, adopted the phrase as a substitute for the broader one* "carried by the table". Had Claim 7 been allowed in its original form it would have read upon all the accused devices since in all the conductor means complementary to the coil spring are "carried by the table". By striking that phrase from the claim and substituting for it "embedded in the table" the applicant restricted his claim to those combinations in which the conductor means, though carried on the table, is also embedded in it.

315 U.S. at 136 (emphasis added). The joinder of issue is apparent to the public in the prosecution history and as to the issue joined, *i.e.* the claim element amended, the public has express notice of the surrender of equivalents.

F. The Rebuttable Presumption Of *Warner-Jenkinson* Has Not Been Eviscerated

Petitioner and its proponents argue that the Federal Circuit has eviscerated the rebuttable presumption of *Warner-Jenkinson* because, by requiring that the reasons for an amendment appear in the prosecution history record, there is no role for that rebuttable presumption when reasons are not in the record. Amici disagree.

Warner-Jenkinson established the rebuttable presumption of prosecution history estoppel for unexplained amendments (*i.e.* amendments not accompanied by remarks stating reasons for the amendments). That presumption remains undisturbed by *Festo*. Under *Festo*, a patentee can rebut the presumption of prosecution history estoppel arising from an unexplained amendment by arguing from the language of the amendment itself in the context of the prosecution history that the amendment was not narrowing or not related to statutory requirements for patentability. *Festo* 234 F.3d at 586 n. 6 ("we wish to make it clear that, in determining the reason for an amendment, a court can properly consider any *attorney argument* regarding the reason for the amendment that is *supported by the prosecution history record*.") (emphasis added); *see Warner-Jenkinson*, 517 U.S. at 34 ("On remand, the Federal Circuit can consider whether reasons for that portion of the amendment was offered or not and whether *further opportunity* to establish such reasons would be proper.") (emphasis added). Thus, there is a clear role for the rebuttable presumption of *Warner-Jenkinson* for unexplained amendments after *Festo* — namely, the presumption can be rebutted by attorney argument based on the claim language as originally composed and amended, along with the patent specification, drawings, other claims, prosecution history and the prior art in the prosecution history.[17]

17. Petitioner and one amicus suggest that a patentee should be able to rely on evidence "outside the record" of the patent prosecution history to rebut the presumption of prosecution history estoppel. (Cont'd)

G. *Festo* Is Not Contrary To Foreign Law And Does Not Violate International Treaties

Petitioner and its proponents suggest, without any substantive analysis or citation to particular foreign patent laws, that *Festo* is contrary to foreign laws and therefore violates international treaties. Petitioner's proponents similarly make the bald assertion that *Festo* is inconsistent with patent law harmonization efforts. Neither point is correct.

Principal trading partners of the United States do not have rules of law analogous to the United States doctrine of equivalents. Approaches to equivalents employed overseas vary because they are related to the particular claiming practices, statutory claiming requirements and claim construction case law of each country.[18] *Festo* could not violate international treaties because there is no single accepted international standard for the doctrine of equivalents. In any event, assuring that United States law is consistent with foreign law in accordance with international treaties should be a matter for Congress. U.S. Const. art. II.

(Cont'd)
However, allowing patentees to rely on extrinsic evidence to rebut the presumption of prosecution history estoppel would lend itself to abuse, and courts have routinely rejected that argument. *See, e.g., Pioneer Magnetics, Inc. v. Micro Linear Corp.*, 238 F.3d 1341, 1344-45 (Fed. Cir. 2001) (refusing to consider patent attorney's declaration regarding the reason for amendment made more than eight years following the amendment), *petition for cert. filed*, 70 U.S.L.W. 3036 (U.S. May 23, 2001) (No. 00-1765); *Pickholtz v. Rainbow Techs., Inc.*, 125 F. Supp. 2d 1156, 1162 (N.D. Cal. 2000) (excluding attorney declaration made 15 years after the amendment).

18. *See* R. Weston, Jr., *A Comparative Analysis Of The Doctrine Of Equivalents: Can European Approaches Solve An American Dilemma?*, 39 J.L. & Tech. 35 (1998) (noting different approaches to claim construction and equivalents in the U.S., U.K. and Germany); A. Soobert, *Analyzing Infringement By Equivalents: A Proposal To Focus The Scope Of International Patent Protection*, 22 Rutgers Computer & Tech. L.J. 189 (1996) (distinguishing approaches to claim construction and equivalents in the U.S., U.K., Germany and Japan).

CONCLUSION

The judgment should be affirmed because the Federal Circuit correctly held that an estoppel can and should be created in *all* contexts in which an amendment narrows the scope of a claim element for any reason related to a statutory requirement for a patent and that such an amendment serves as a disclaimer to completely bar application of the doctrine of equivalents as to the amended claim element.

Respectfully submitted,

dated: October 31, 2001

CHRISTOPHER A. HUGHES
Counsel of Record
MARK J. ABATE
MORGAN & FINNEGAN, L.L.P.
345 Park Avenue
New York, New York 10154
(212) 758-4800

FREDERICK T. BOEHM
KEVIN M. JORDAN
PRYOR A. GARNETT
MARK F. CHADURJIAN
IBM CORPORATION
Armonk, New York 10504

J. JEFFREY HAWLEY
ANDREW J. ANDERSON
EASTMAN KODAK COMPANY
Rochester, New York 14650

WILLIAM J. COUGHLIN
DANIEL M. STOCK
FORD MOTOR COMPANY
Dearborn, Michigan 48121

VERNON R. RICE
BARRY ESTRIN
P. MICHAEL WALKER
E.I. DU PONT DE NEMOURS
AND COMPANY
Wilmington, Delaware 19805

GERALD DEBLASI
RICHARD J. BOTOS
AGERE SYSTEMS INCORPORATE
Berkeley Heights, New Jersey 07922

RICHARD WHITING
THE FINANCIAL SERVICES
ROUNDTABLE
805 15th Street, NW
Washington, DC 20005

Attorneys for Amici Curiae

Supreme Court, U.S.
FILED
OCT 31 2001
CLERK

No. 00-1543

IN THE

Supreme Court of the United States

FESTO CORPORATION,

Petitioner,

v.

SHOKETSU KINZOKU KOGYO KABUSHIKI CO. LTD.
(a/k/a SMC CORPORATION) & SMC PNEUMATICS, INC.,

Respondents.

On Writ of Certiorari to the United States Court of Appeals for the Federal Circuit

BRIEF *AMICUS CURIAE* OF GENENTECH, INC. IN SUPPORT OF RESPONDENTS SEEKING AFFIRMANCE

Jeffrey P. Kushan,
Counsel of Record
David L. Fitzgerald
Marinn F. Carlson
POWELL, GOLDSTEIN,
FRAZER & MURPHY LLP
1001 Pennsylvania Ave. NW
Washington, D.C. 20004
Tel: (202) 347-0066

BEST AVAILABLE COPY

TABLE OF CONTENTS

TABLE OF AUTHORITIES iii

BRIEF *AMICUS CURIAE* 1

INTERESTS OF THE *AMICUS CURIAE* 1

SUMMARY OF THE ARGUMENT 2

ARGUMENT 4

I. *Festo* provides a balanced, workable, and fair standard for interpreting acts that give rise to prosecution history estoppel. 4

A. *Festo* does not eliminate the doctrine of equivalents, but simply refines its application. 4

B. The *Festo* rule is a fair and workable test for assessing whether a patent applicant has relinquished rights. 6

C. The public is entitled to rely on the record of examination to determine the enforceable rights granted to a patent owner. 8

D. The *Festo* court properly held that a claim amendment made to overcome any patentability deficiency should give rise to prosecution history estoppel. 10

E. A complete bar has significant public policy benefits because it provides certainty as to the scope of patent rights. 13

F. Application of the *Festo* rule does not "take" any property rights held by patent owners. 14

II. Concerns over adapting practice to the *Festo* rule can be fairly resolved and should not deter adoption of sound public policy. 15

A. Courts will develop rules to govern the interpretation of "intrinsic" evidence regarding the motivations for claim amendments. 17

B. Courts will refine when "claim elements" have been "narrowed" and what grounds constitute those "substantially related to patentability." 18

C. Continuing applications preserve an applicant's ability to pursue and obtain broad claims. 18

D. *Festo* will promote more informative file histories. ... 20

III. The Federal Circuit's holding does not establish a disincentive to biotechnology innovation or to the commercialization of patented technology. 22

A. The biotechnology industry is not built on the doctrine of equivalents. 22

B. The clarity and predictability resulting from the *Festo* rule will promote investment in the biotechnology industry. 27

CONCLUSION 29

TABLE OF AUTHORITIES

CASES

ACLARA Biosci. Inc. v. Caliper Tech. Corp., 125 F. Supp. 2d 391 (N.D. Cal. 2000) 17

Amgen, Inc. v. Chugai Pharm. Co., 927 F.2d 1200 (Fed. Cir. 1991) 24

Amgen, Inc. v. Hoechst Marion Roussel, Inc. and Transkaryotic Therapies, Inc., 126 F. Supp. 2d 69 (D. Mass. 2001) 28

Control Resources, Inc. v. Delta Electronics, Inc., 133 F. Supp. 2d 121 (D. Mass. 2001) 16

Festo Corp. v. Shoketsu Kinzoku Kogyo Kabushiki Co. Ltd., 234 F.3d 558 (Fed. Cir. 2000) ..... passim

Graham v. John Deere Co., 383 U.S. 1 (1966) 19, 27

Hughes Aircraft Co. v. United States, 717 F.2d 1351 (Fed. Cir. 1983) 6

In re Angstadt, 537 F.2d 498 (C.C.P.A. 1976) 25

In re Deuel, 51 F.3d 1552 (Fed. Cir. 1995) 25

In re Oetiker, 977 F.2d 1443 (Fed. Cir. 1992) 9

In re Wands, 858 F.2d 731 (Fed. Cir. 1988) ..... passim

Litton Systems, Inc. v. Honeywell, Inc., 140 F.3d 1449 (Fed. Cir. 1998) 9

Markman v. Westview Instruments, Inc., 52 F.3d 967 (Fed. Cir. 1995) 9

Regents of the Univ. of Calif. v Eli Lilly and Co., 119 F.3d 1559 (Fed. Cir. 1997) 11, 25, 26

Ruckelshaus v. Monsanto Co., 467 U.S. 986 (1984) 14

TurboCare Div. of Demag Delaval Turbomachinery Corp. v. General Elec. Co., 264 F.3d 1111 (Fed. Cir. 2001) 11, 17

Vas-Cath, Inc. v. Mahurkar, 935 F.2d 1555 (Fed. Cir. 1991) 11

Warner-Jenkinson Co., Inc. v. Hilton Davis Chemical Co., 520 U.S. 17 (1997) 4, 16, 17

Wilson Sporting Goods Co. v David Geoffrey & Assoc., 904 F.2d 677 (Fed. Cir. 1990) 15

STATUTES

35 U.S.C. § 101 12

35 U.S.C. § 102 ..... 10, 12

35 U.S.C. § 103 ..... 10, 12

35 U.S.C. § 112 ..... passim

35 U.S.C. § 120 18

35 U.S.C. § 251 8

35 U.S.C. § 261 14

American Inventors' Protection Act, Pub. L. No. 106-113 16

Uruguay Round Agreements Act, Pub. L. No. 103-465 15

RULES

Supreme Court Rule 37.3(a) 1

Supreme Court Rule 37.6 1

OTHER AUTHORITIES

Dana Rohrbacher & Paul Crilly, *The Case for a Strong Patent System*, 8 HARV. J. L. & TECH. 263 (1995) 15

Donald S. Chisum, CHISUM ON PATENTS (1998) 13

U.S. Patent & Trademark Office, *Training Materials for Examining Patent Applications with Respect to 35 U.S.C. Section 112, First Paragraph—Enablement: Chemical-Biotechnical Applications* 27

U.S. Patent and Trademark Office, MANUAL OF PATENT EXAMINING PROCEDURE (8th ed. 2001) 12, 19, 26, 27

BRIEF *AMICUS CURIAE*

Pursuant to Supreme Court Rule 37.3(a), on written consent of all parties filed with the Court concurrently with this submission, Genentech, Inc. ("Genentech") respectfully submits this brief *amicus curiae* in support of Respondents.[1]

INTERESTS OF THE *AMICUS CURIAE*

Genentech is a biotechnology company based in South San Francisco, California. Its corporate mission is to use human genetic information to develop, manufacture, and market pharmaceuticals that address significant unmet medical needs. Founded in 1976, Genentech was the first "biotechnology" company. It has been a pioneer in recombinant protein medicines throughout its existence. Genentech scientists have been granted over 700 United States patents, and the company continues an active program of filing and prosecuting patent applications to protect its inventions.

Genentech is active in all aspects of the patent system. It licenses its technology both to other commercial entities and to academic researchers, and the company regularly takes licenses on patented technology owned by others. It has been a participant in litigation—often involving patent rights of considerable value—as plaintiff, defendant, and third party.

It is hardly lost on Genentech that the rules announced by the *en banc* Federal Circuit in *Festo Corp. v. Shoketsu Kinzoku Kogyo Kabushiki Co. Ltd.*, 234 F.3d 558 (Fed. Cir.

---

[1] Pursuant to Rule 37.6, *amicus curiae* states that no person or entity other than Genentech or its counsel has made any monetary contribution to the preparation or submission of this brief. Further, no counsel for Petitioner or Respondents authored this brief in whole or in part.

2000), have had immediate and perceptible effects on several aspects of patent practice. In the short term, the new rules are likely to work to Genentech's advantage in some situations, and to its disadvantage in others. But Genentech believes that patent applicants and their attorneys are fully capable of adapting their patent application and prosecution practices to comport with those rules, so as to continue to enjoy the benefits of strong and effective patent protection. It similarly believes that the U.S. Patent and Trademark Office ("PTO") and the courts have the resources to operate effectively in a post-*Festo* environment.

In Genentech's view, the approach to prosecution history estoppel taken in *Festo* is the right one. The decision of the Court of Appeals corrects an imbalance under prior practice between the rights and responsibilities of patentees on the one hand, and the public interest on the other. Moreover, Genentech believes that the complete bar rule, as implemented by *Festo*, will provide substantial benefit over the long term to the biotechnology industry.

SUMMARY OF THE ARGUMENT

In *Festo*, the *en banc* Federal Circuit established objective, precise, and "workable" standards to govern the effect of prosecution history estoppel in connection with the doctrine of equivalents. Its prior precedent held that a narrowing claim amendment could have widely varying effects on the scope of relief available under the doctrine of equivalents. As a consequence, the literal terms of amended patent claims had become one of the *less* important indicators of the scope of the patentee's enforceable rights.

Clarity and legal certainty promote innovation and investment. *Festo* advances these objectives. It relies on a straightforward indicator, amendments made for reasons substantially related to patentability, that can be reliably evaluated in light of the objective evidence in the prosecution history.

A narrowing amendment, when made by an applicant following a determination by the PTO that the applicant is not entitled to the breadth of protection sought, signals that the applicant has relinquished the right to exclude others from using subject matter outside the scope of the amended claim. The public should be entitled to rely on this surrender, regardless of the particular statutory requirement that formed the basis for the PTO's determination of non-entitlement.

Viewed objectively, the "complete bar" rule provides a number of public policy benefits. Under the *Festo* rule, the notice function of the patent is enhanced by the transparency of the prosecution history. Because patent applicants will amend their claims only when rejections are clearly stated and fully supported, amendments will correlate more closely with patentability. The result will be more thorough and informative prosecution histories. Any disruptions associated with changes to application filing and prosecution practice are likely to be temporary, and they are a reasonable price to pay for the benefits of a better rule.

The Court of Appeals did not purport to eliminate the doctrine of equivalents, and the new rule will not do so in practice. *Festo* simply refines the analysis for measuring the effect of actions taken by patent applicants.

The biotechnology industry will thrive under *Festo*. Federal Circuit precedent and PTO practice allow biotechnology patent applicants to claim their inventions broadly, *provided* that they fully describe and enable the public to practice the invention. This incentive reinforces a sound business strategy: reliance on *literal* claim coverage to protect important inventions, rather than a mere possibility that equitable relief will be available under the doctrine of equivalents. The predictability gained from the new rule will lead to more informed business decisions and will stimulate investment in the industry.

ARGUMENT

I. *Festo* provides a balanced, workable, and fair standard for interpreting acts that give rise to prosecution history estoppel.

Prosecution history estoppel serves an important role in balancing the competing public policy interests that motivate the statutory claiming requirement. As this Court has recognized, if the patent system is to promote innovation, a patent must both fairly protect the rights of the inventor and provide reasonable notice to the public of the scope of the property right granted. *Warner-Jenkinson Co., Inc. v. Hilton Davis Chemical Co.*, 520 U.S. 17, 33 (1997) ("claims do indeed serve both a definitional and a notice function"). Neither interest can or should eclipse the other.

Genentech thus does not side with those who urge that the notice function of the claims is paramount. However, based on its experience in procuring, enforcing, licensing, and litigating patents in the biotechnology industry, Genentech does believe that the rules in effect prior to *Festo* have skewed the patent application and prosecution process toward greater uncertainty about the boundaries of patent claims. A rebalancing is in order, and the Federal Circuit's decision accomplishes it.

A. *Festo* does not eliminate the doctrine of equivalents, but simply refines its application.

Petitioner and its supporting *amici* portray the majority opinion of the Federal Circuit as effectively extinguishing the doctrine of equivalents. This mischaracterizes the opinion and overstates the impact it will have on the enforceability of patent claims.

The impact of *Festo* is reasonable and precise: its rule concerns *narrowing* amendments made to specific *claim*

elements during prosecution for purposes *substantially related to patentability*. Patent owners who have not narrowed claim elements due to patentability deficiencies, or who provide a written record that makes it clear that the narrowing amendment was not made for a reason substantially related to patentability, will enjoy the same access to the doctrine of equivalents as they did prior to *Festo*.

Festo only operates when patent owners amend their claims to relinquish subject matter. Under the new rule, that subject matter, relative to the amended claim element, cannot be "recovered" through the doctrine of equivalents. Under pre-*Festo* practice, the relinquishing act *could* but would not necessarily preclude relief. *Festo* creates certainty for both the patentee and the public about the effect of an act of relinquishment.

Notwithstanding the extreme reactions of Petitioner and its *amici*, the Federal Circuit has not abolished the doctrine of equivalents. Rather, it has restated the legal test for the doctrine's availability in situations where the patent owner has disclaimed subject matter. If the condition is satisfied (*i.e.*, there has been no narrowing amendment of a claim element made for reasons related to patentability), then the doctrine of equivalents is fully available. The test relies on evidence that is readily ascertainable from inspection of the administrative record of the patent examination. The doctrine of equivalents remains alive and well after *Festo* and will provide a remedy for patent owners—other than those who would attempt to reclaim that which they expressly disclaimed during the patent's examination.

B. The *Festo* rule is a fair and workable test for assessing whether a patent applicant has relinquished rights.

The merits of the *Festo* rule should be assessed objectively, and not simply through the lens of its impact on previously granted patents. Certainly, there may be situations where a patent owner will be prejudiced by the application of the *Festo* rule to a record of examination created before the new rule. But the putatively adverse effects of these rules as described by the Petitioner and its *amici* are limited to patents granted before *Festo*. Those citing these patents to challenge the soundness of the *Festo* rule seem to be assuming that patent applicants will not make any extra effort after *Festo* to produce better-documented examination records. Measured prospectively, rather than against these examples, the *Festo* rule is sound, fair, and workable.

As the Federal Circuit majority candidly observed, their holding was designed to address the all-too-frequent reliance on the doctrine of equivalents by an unreasonably large proportion of patent infringement litigants. *See Festo*, 234 F.3d at 578 ("A complete bar reins in the doctrine of equivalents . . ."). The court was justifiably concerned by the inability of members of the public to know—short of the conclusion of litigation involving the patent—whether they could rightfully use subject matter outside the literal scope of the claims.

Under the pre-*Festo* "flexible bar" rule, prosecution history estoppel might limit the scope of equivalents "within a spectrum ranging from great to small to zero." *Hughes Aircraft Co. v. United States*, 717 F.2d 1351, 1363 (Fed. Cir. 1983). Thus, under pre-*Festo* practice, the literal terms of amended claims perversely became one of the *less* important indicators of the scope of enforceable rights retained by the patentee. It was this inability of the public to determine the

scope of rights granted by the patent based on the public record of the patent examination that was the object of the court's holding.

The new rule the Federal Circuit announced does not undermine the doctrine of equivalents or the process used to evaluate equivalents. Instead, it refines the legal test for determining whether relief through the doctrine of equivalents should be available. Specifically, the court discarded a subjective and open-ended standard for determining whether the patent owner's own acts should preclude relief, in favor of an *objective* standard based on publicly accessible evidence in the prosecution record of a patent. The new test certainly is more limiting than the previous standard, especially for those seeking to rely on *post hoc* rationales for the patent owner's actions, but this does not make the test unworkable or unsound.

The inherent uncertainty of the pre-*Festo* "flexible bar" rule has proven to be a windfall for patent owners going far beyond the remedial purposes of the doctrine of equivalents. This uncertainty enabled patent owners to exploit the public's reluctance to risk liability for use of technology related in varying degrees to the patented invention. In effect, the flexible bar rule permitted patent owners to control access to technology within the public domain in addition to the technology specifically claimed in the patent. The patent statute does not and should not grant such barriers to fair competition as part of the reward for an invention.

In contrast, the complete bar rule confines relief under the doctrine of equivalents to a more predictable set of circumstances—namely, those where patentees do not take actions during prosecution of the patents to expressly foreclose their rights to protect insubstantial variations of the invention. As applied in *Festo*, the complete bar provides simply that a doctrine of equivalents analysis is not appropriate where the objective evidence of the prosecution

history indicates that the patent applicant surrendered the subject matter in question. Such a surrender—a narrowing amendment—is almost always the result of an event, such as a rejection by the PTO examiner, that places the patent applicant on direct notice that subject matter embraced by the original claim is unpatentable.

Applying the *Festo* rule to an adequately documented record of examination will reliably yield a fair and equitable result. Evidence in the administrative record of the patent demonstrating that subject matter has been relinquished will control the determination of estoppel against the patent owner with respect to the relinquished subject matter. When an applicant narrows a claim, the applicant is fully aware of the subject matter retained in the claim and that being relinquished. Most patent applicants and their counsel are neither naïve nor incapable of drafting and amending claims that yield the greatest possible breadth of literal coverage. Patent applicants also have alternatives to relinquishing subject matter, including appeal, continuing examination of the application, or even amendment by filing a broadening reissue application within two years of the date of the patent grant, 35 U.S.C. § 251. A patent with broader claims granted on the basis of a continuing application in this scenario will not face the *Festo*-based limitations of the first patent. Given these considerations, the public should be entitled to rely on a clear public record of surrender of subject matter.

C. The public is entitled to rely on the record of examination to determine the enforceable rights granted to a patent owner.

The prosecution history of a patent should have a primary role in determining the scope of rights granted—and not granted—to the patent owner. It is a defined body of objective evidence, readily available to the public, that documents the administrative examination of the application

by the PTO. Each patent applicant has an ample opportunity to participate in shaping this record before the patent is granted. .

The prosecution history is integral to the notice function served by the patent claims. *See Markman v. Westview Instruments, Inc.*, 52 F.3d 967, 979-80 (Fed. Cir. 1995), *aff'd* 517 U.S. 370 (1996). In particular, the second paragraph of 35 U.S.C. § 112 provides:

> The specification shall conclude with one or more claims particularly pointing out and distinctly claiming the subject matter which the applicant regards as his invention.

This section states two separate requirements. First, the applicant must claim "particularly . . . and distinctly," that is, the claims must convey the metes and bounds of the invention with reasonable clarity. Second, the claims must be directed to the subject matter which the applicant "regards as his invention." *See, e.g., Litton Systems, Inc. v. Honeywell, Inc.*, 140 F.3d 1449, 1461 (Fed. Cir. 1998) (holding that an amendment responding to a rejection based on such grounds was made for a substantial reason related to patentability). By amending claims, an applicant represents that "the invention" (*i.e.*, the subject matter in which enforceable property rights are sought) extends only so far as the literal terms of the amended claims.

The written records contained in the file wrapper of a patent provide a sufficient basis for determining what, if anything, the patent applicant relinquished during the examination of the patent. For example, the PTO may conclude that the applicant is not entitled to the breadth of protection sought in the claims. To reject a claim on such grounds, the PTO must cite a deficiency based on one of the statutory requirements for patentability and support its assertion with suitable argument or evidence. *See In re Oetiker*, 977 F.2d 1443, 1445 (Fed. Cir. 1992) (explaining

the role of a *prima facie* case of unpatentability in *ex parte* examination). In response, the applicant may contest and appeal any such rejection. If improperly imposed, the rejection will be withdrawn without the necessity of a claim amendment. Alternatively, the applicant may choose to amend a claim and accept the consequences of that action. While the applicant's subjective motivation for the amendment may be to expedite the prosecution of the application, that amendment, *in the absence of any explanation*, is the clearest possible indication that the applicant has surrendered the subject matter outside the scope of the amended claim.

Some argue that a patent applicant should not be penalized for "taking the bargain offered by the Patent Office." *See, e.g.*, Chiron *Amicus* Br. at 26. But an offer by an examiner to allow amended claims is not a "deal" subject to the same rules and expectations as a business negotiation. It is instead an indication that the PTO has affirmatively determined only a subset of the claimed subject matter to be patentable. The patent statute and the PTO's rules of practice give the applicant the absolute right, as well as ample opportunity, to contest the examiner's conclusions. It is the applicant, and only the applicant, who holds the power to authorize a narrowing amendment to the claims.

D. The *Festo* court properly held that a claim amendment made to overcome any patentability deficiency should give rise to prosecution history estoppel.

The *en banc* Court of Appeals held that "a narrowing amendment made for any reason related to the statutory requirements for a patent will give rise to prosecution history estoppel with respect to the amended claim element." *Festo*, 234 F.3d at 566. Petitioner, in contrast, would draw a distinction between unpatentability based on prior art under 35 U.S.C. § 102 and § 103, on the one hand,

and an insufficiency of disclosure under 35 U.S.C. § 112, on the other. *See* Pet. Br. at 26-27. In its view, the former sections of the statute are the exclusive statutory requirements for patentability. The latter, Petitioner argues, involve mere formalities because they appear in a chapter of the statute entitled "Application for Patent." *See id.*

This argument lacks merit. Some of the requirements of 35 U.S.C. § 112 are concededly administrative, such as the restrictions on multiple claim dependence set forth at the fifth paragraph of that section. Others, however, serve important and substantive functions in our patent system, particularly in the field of biotechnology.

The enablement requirement of the first paragraph of 35 U.S.C. § 112, for example, ensures that the applicant is granted claims that correspond to what the inventor has disclosed in sufficient detail to enable a person skilled in the art to make and use the invention without undue experimentation. *In re Wands*, 858 F.2d 731 (Fed. Cir. 1988). Similarly, the written description requirement, a distinct provision of the first paragraph of 35 U.S.C. § 112, serves the evidentiary function of ensuring that the applicant "was in possession of" the claimed subject matter as of the filing date of the application. *Vas-Cath, Inc. v. Mahurkar*, 935 F.2d 1555, 1563-64 (Fed. Cir. 1991); *see also Regents of the Univ. of Calif. v Eli Lilly and Co.*, 119 F.3d 1559 (Fed. Cir. 1997). The PTO certainly treats both requirements as substantive requirements for patentability, and not as simple application formalities.[2] *See* U.S. Patent &

---

[2] Many amendments, particularly under the second, fourth, fifth, and sixth paragraphs of § 112, are made for "substantial reasons related to patentability" but are not "narrowing." Consequently, such amendments will not invoke the complete bar announced in *Festo*. *See, e.g., TurboCare Div. of Demag Delaval Turbomachinery Corp. v. General Elec. Co.*, 264 F.3d 1111, 1125-26 (Fed. Cir. 2001) (amendment "redefin[ing]" claim

Trademark Office, MANUAL OF PATENT EXAMINING PROCEDURE §§ 2163-64 (8th ed. 2001) (hereinafter M.P.E.P.). The PTO similarly uses the utility requirement of 35 U.S.C. § 101 as the basis for substantive rejections of claims. *See* M.P.E.P. § 2107.

Petitioner's attempt to distinguish 35 U.S.C. § 112 deficiencies from those arising under 35 U.S.C. § 102 or § 103 is feeble at best. A determination by an examiner that a claim is not enabled by the disclosure, or cannot be supported by the written description, followed by an amendment to conform the claim to a scope that does not have the deficiencies identified by the examiner, creates an entirely justifiable presumption that the applicant *was not entitled to rights beyond the scope of the amended claims.* Which particular statutory patentability requirement is lacking is irrelevant. To find otherwise would mean that a patent claim found to be unjustified due to an inadequate disclosure at the time of examination could somehow become justified when the patent is enforced.

Moreover, the enablement and written description requirements enforce the fundamental *quid pro quo* of the patent system that a patent should be granted in exchange for the full disclosure to the public of a new and useful invention. A deficiency with respect to either criterion is an entirely justifiable basis for denying a grant of patent or for invalidating an issued patent claim.

It is also notable that 35 U.S.C. § 101, titled "Inventions patentable," states that a patent may be obtained only "subject to the conditions and requirements of this title." This language does not exempt the provisions of 35 U.S.C. § 112 or any other section from the requirements for

---

language in response to a rejection under 35 U.S.C. § 112, second paragraph, did not change scope of the claim and thus did not give rise to prosecution history estoppel).

"patentability." Petitioner would have this Court draw a distinction that the statute does not.

E. A complete bar has significant public policy benefits because it provides certainty as to the scope of patent rights.

"[A] major purpose of claims is to notify the public as to what constitutes infringement." Donald S. Chisum, CHISUM ON PATENTS § 18.02[2] (1998). Under a flexible bar rule, however, the claims can be relied upon only to define the limits of the subject matter in which the patentee *might* assert exclusive rights. The competitor who thoroughly evaluates the prosecution history, reviews all of the relevant prior art, and secures one or more detailed opinions of patent counsel will be rewarded with, at best, informed conjecture about the outer limit of what the patent claims encompass. Even if a court were to eventually determine that the patentee is entitled to enforce only a very narrow range of equivalents, the claims will not have provided notice to the public as to what the public reasonably could expect to practice without liability for patent infringement.

The *Festo* rule provides certainty that advances the public interest in several important respects. First, it helps parties avoid a significant amount of unproductive litigation. Second, it substantially reduces the transaction costs for all market participants in evaluating competing patent positions, particularly in a crowded market involving a mature technology. Third, it provides patent owners and their investors with more reliable assessments of their proprietary positions.

The complete bar rule is also a superior method for assessing what the patentee has surrendered during prosecution. The language of the claims provides a far better indication of what a given amendment was meant to achieve than any subjective evaluation of the applicant's

motivation. The public notice function of the patent is supported by the straightforward and transparent nature of the complete bar rule.

F. Application of the *Festo* rule does not "take" any property rights held by patent owners.

A number of the *amici* supporting reversal argue that the *Festo* decision represents an unprecedented "taking" of property rights. *See, e.g.*, Wisc. Alumni Res. Found. *Amicus* Br. at 20. As with a number of other characterizations of the decision below, this is neither accurate nor justified.

Patents confer private property rights. 35 U.S.C. § 261 ("Subject to the provisions of this title, patents shall have the attributes of personal property."). Certainly the unauthorized and uncompensated use by the federal government of subject matter claimed in a patent would be an unconstitutional taking of property. *Cf. Ruckelshaus v. Monsanto Co.*, 467 U.S. 986, 1003-04 (1984) (taking of intangible property cognizable under Fifth Amendment). However, the suggestion that the adoption of the complete bar rule abrogates vested property rights is entirely misplaced.

In assessing these characterizations, it is crucial to recall that the relief available through the doctrine of equivalents has never been a "right" of the patent owner. Instead, it is fundamentally an equitable remedy that courts have provided *notwithstanding* the absence of any literal infringement of the patent claims.

The claims define the property right granted by the government in exchange for disclosure of the invention. As the late Judge Rich noted, "[t]he doctrine of equivalents, by definition, involves going *beyond any permissible interpretation* of the claim language; *i.e.*, it involves determining whether the accused product is 'equivalent' to what is described by the claim language." *Wilson Sporting*

Goods Co. v David Geoffrey & Assoc., 904 F.2d 677, 684 (Fed. Cir. 1990) (emphasis added).

A trial court may invoke its equitable discretion to provide relief to a patent owner for the unauthorized use of *unclaimed* subject matter "equivalent" to the patented invention. But *a priori*, the only assurance that the patent owner has, absent a bar raised by prosecution history estoppel, is that the court will undertake a doctrine of equivalents *analysis*. The availability of a theory for equitable relief cannot be equated to a vested property right associated with the patent.

In *Festo*, the Federal Circuit clarified aspects of a proper doctrine of equivalents analysis. The refinement of a rule governing the circumstances under which equitable relief might be proper has nothing to do with the Constitutional prohibition against the taking of property rights without just compensation.

II. Concerns over adapting practice to the *Festo* rule can be fairly resolved and should not deter adoption of sound public policy.

Patent law and practice have successfully adapted to changes far more drastic than the changes predicted to result from *Festo*. Indeed, change and adaptation are neither surprising nor unfamiliar to participants in the patent system.

In the last decade alone, the practice of patent law has experienced enormous changes. In 1994, Congress enacted the Uruguay Round Agreements Act, Pub. L. No. 103-465, which *inter alia* changed the way patent term is measured and gave applicants the ability to prove prior invention based on acts in foreign countries. Both provisions led to dire predictions of negative effects when they were proposed, *see generally* Dana Rohrbacher & Paul Crilly, *The Case for a Strong Patent System*, 8 HARV. J. L. & TECH. 263 (1995), but those effects have not materialized. In

1999, Congress adopted the American Inventors' Protection Act, Pub. L. No. 106-113, which, among other things, instituted pre-grant publication of patent applications, new patent term adjustment standards, and significant changes to the PTO's organizational structure. Even greater change lies in the foreseeable future as the United States, led by the PTO, engages in multilateral negotiations in an effort directed toward harmonization of patentability standards on a global basis.

All of these changes have prompted the reevaluation of business strategies by patent applicants and patent owners. They have required patent attorneys to master complicated new bodies of law and procedure. The PTO has promulgated regulations to implement the new laws and has had to manage significantly different workloads arising from changed practice. In spite of disruptions to settled practice caused by significant changes in the law, the patent system has evolved and adapted, and has continued to effectively promote innovation and serve the public interest.

This case involves the judicial treatment of a judicial doctrine rather than a new provision of statutory law. The courts, and particularly the Federal Circuit, are ideally equipped to refine the legal tests—including with respect to the new issues implicated by the *Festo* rule—governing access to the doctrine of equivalents "in the orderly course of case-by-case determinations," *Warner-Jenkinson*, 520 U.S. at 40. As they do, the disruption associated with the new rule will inevitably abate as the new rule becomes the norm.[3]

---

[3] Several courts to date have applied *Festo*, arriving at straightforward conclusions, *see, e.g., Control Resources, Inc. v. Delta Electronics, Inc.*, 133 F. Supp. 2d 121, 137 (D. Mass. 2001), even where the Federal Circuit's *Festo* opinion did not address every question required to resolve the issues at hand, *see, e.g., ACLARA Biosci. Inc. v. Caliper Tech. Corp.*, 125 F. Supp. 2d 391, 398-402 (N.D. Cal. 2000); *TurboCare*, 264 F.3d at 1125-26.

A. Courts will develop rules to govern the interpretation of "intrinsic" evidence regarding the motivations for claim amendments.

As this Court held in *Warner-Jenkinson*, 520 U.S. at 33, there is a rebuttable presumption that an unexplained amendment was made for reasons related to patentability. The Federal Circuit held that a patentee may use only the evidence in the prosecution history itself to explain the basis for an amendment. *See Festo*, 234 F.3d at 586. Key to the latter holding is that patentees should not be able to manufacture *post hoc* rationales to escape the effects of estoppel of their own creation.

The prosecution history of a patent is a defined body of publicly available, objective evidence. It is compiled with the full participation of the patent applicant. Given this combination of characteristics, it is appropriate to rely on the prosecution history as the exclusive source of evidence for evaluating the actions taken by the applicant before the PTO.

This is not to say, however, that all of the relevant evidence relating to the examination of a given application is to be found in the "file wrapper" of the patent (*i.e.*, the collection of papers associated with examination of the patent). The actions documented in the file wrapper occurred within the context of examination policies and the law in effect at the time of the examination of the application. Prevailing law and practice are thus an inherent part of every prosecution history and are available to give context and meaning to the records of the PTO. Genentech believes that it is reasonable, as well as consistent with the Federal Circuit's holding in *Festo*, to take account of suitable objective evidence, such as the edition(s) of the

PTO's *Manual of Patent Examining Procedure* in effect during the pendency of the application, *Federal Register* notices explaining PTO examination standards, and the like, when evaluating the examination record.

B. Courts will refine when "claim elements" have been "narrowed" and what grounds constitute those "substantially related to patentability."

The *Festo* rule employs certain variables (*e.g.*, "claim element," "narrowing amendment," "substantial reason related to patentability") that govern the determination of whether a patent owner has relinquished subject matter and, as a consequence, should be barred from relief under the doctrine of equivalents. The proper use of each of these variables within the *Festo* framework will be refined through subsequent jurisprudence of the Federal Circuit.

For example, the complete bar rule is to be assessed with respect to a "claim element" that has been "narrowed." What constitutes a "claim element," and whether the claim element has been "narrowed" by an amendment, are issues that future courts will develop rules to govern. Moreover, they will likely develop rules and understandings specific to the differing practices employed in various technological disciplines. Interpretive rules will evolve to provide some flexibility in applying *Festo* to different technological areas.

C. Continuing applications preserve an applicant's ability to pursue and obtain broad claims.

A patent applicant may file a series of applications based on a single initial application. For each application, the applicant may obtain the priority of the filing date of the first in the series, provided that the claims in the later application are supported in the first. 35 U.S.C. § 120. Multiple patents, each with its own discrete set of claims

and record of examination, can arise from this series of applications.

Continuing application practice gives applicants the option of seeking further examination of broader claims at a later date to resolve issues that turn on additional evidence not available during prosecution of the initial application. For example, where the prior art supports a *prima facie* case of unpatentability under 35 U.S.C. § 103, additional objective evidence, such as that relating to commercial success or a long-felt need in the art, can establish the patentability of the claims. *See Graham v. John Deere Co.*, 383 U.S. 1 (1966). Similar procedural considerations come into play where evidence cited by the PTO calls into question the skilled artisan's ability to practice the full scope of the invention without undue experimentation, as required by 35 U.S.C. § 112, *see In re Wands*, 858 F.2d 731 (Fed. Cir. 1988), or compliance with the utility requirement of 35 U.S.C. § 101, *see* M.P.E.P. § 2107.

Continuation practice benefits the public by promoting the early disclosure of inventions in a first issued patent—without penalizing the patent applicant. Providing the applicant an opportunity to secure broader claims *to which the disclosure entitles him* benefits the public by preserving the stimulus for others to innovate that broad exclusivity provides. Additionally, the more extended examination captured in a second, continuing application provides a thorough, informative prosecution history that supports the interpretation and enforceability of both the narrow claims issued in the first patent and the broader claims in the second.

Existing continuation practice should not be affected by the *Festo* rule on prosecution history estoppel. A contrary rule, holding that the surrender of subject matter by narrowing amendment is final for all purposes and thus effectively eliminating the applicant's option to pursue broader claims in a continuing application, would

undermine the benefits and balance of the *Festo* decision. In this respect, Genentech is confident that courts and the Federal Circuit will develop jurisprudence to refine the *Festo* rule in ways that will preserve the ability of patent applicants to pursue broad claims through continuation practice while obtaining immediate grants of narrower claims in a first application.

D. *Festo* will promote more informative file histories.

After *Festo*, patent applicants understandably will approach prosecution more carefully than in the past, especially when considering narrowing claim amendments. They will be reluctant to acquiesce to amendments in the face of arguably unfounded rejections, particularly those involving a greater degree of subjectivity. Until the Federal Circuit clarifies the law governing aspects of the complete bar rule, applicants will carefully review the potential consequences of their actions and will behave more conservatively.

The most immediate short-term effect of the *Festo* rule will be that applicants will draft original application claims more carefully and will carefully consider and document any claim amendments. These are all desirable developments that will lead to stronger, more reliable patents that provide clearer notice to the public. Clearer prosecution histories will result because amendments will correlate more closely with valid rejections. More complete records will also better delineate the nature of a surrender of subject matter, whether based on prior art, insufficient description or disclosure, or any other statutory ground of unpatentability.

Likewise, PTO practice is likely to improve in *Festo*'s wake. While several of the *amici* supporting Petitioner have painted gloomy scenarios—arguing that if *Festo* is affirmed the PTO will be overwhelmed by contentious and difficult

prosecutions because prosecuting patent attorneys will submit innumerable claims and refuse to agree to any amendment—they fail to appreciate the beneficial consequences of those same dynamics.

The examination practices of the PTO will surely change in view of the rule announced in *Festo*. What will not change, however, is that applicants will remain motivated to secure patent allowances, and their attorneys will still work to secure literal claim coverage for at least the most important aspects of the inventions.

If some applicants engage in tactics that the PTO finds unreasonably burdensome, it has the administrative experience and the regulatory authority to devise suitable procedures to address and resolve procedural problems. It is also likely that the courts, and in particular the Federal Circuit, will develop clearer rules to neutralize "clever" stratagems designed to escape the effect of *Festo*. The burdens on the PTO are likely to be transitory, much like those that occur when a decision of the Federal Circuit materially alters the application of the statutory criteria for patentability.

The bar's reluctance to accommodate "examiner preference" rejections will, in all likelihood, result in more judicious use of rejections by the PTO and more thorough justifications for them. This trend will be driven by the agency's need to expend its examination resources only on those issues that properly relate to the statutory requirements for patentability. For similar reasons, the PTO is likely to develop practices and procedures that will yield a better examination record and thus higher quality patent grants. The very effects decried by the Petitioner and its chorus will thus in fact benefit patent applicants and the public by promoting better PTO practice.

III. The Federal Circuit's holding does not establish a disincentive to biotechnology innovation or to the commercialization of patented technology.

Petitioner and many of the *amici* supporting its position express concern that absent an unfettered ability of patentees to resort to the doctrine of equivalents, there will be no incentive to innovate—whether generally, or with respect to biotechnology in particular. Genentech disagrees. The rewards provided by the patent system will remain, and the exclusivity provided by a patent with its attendant market is something that no mere copyist can obtain under the law.

If anything, the decision of the Court of Appeals will restore the proper balance between the disclosure requirements of the patent statute and the grant of exclusivity to the patentee. The new rule will encourage innovation *and* complete disclosure of the invention. The patent applicant who provides both will secure claims of sufficient breadth to effectively deter copyists, and will leave a prosecution history that will better inform members of the public where they may act without fear of infringement liability. Biotechnology will not only survive *Festo*, but will thrive under it.

A. The biotechnology industry is not built on the doctrine of equivalents.

Genentech fully joins with several *amici* representing biotechnology companies and research organizations in confirming that effective patent protection is critical to innovation and economic vitality in our industry. Genentech parts company with these *amici*, however, when they assert that a complete bar rule, as implemented by the decision below, will drastically undermine the value of existing biotechnology patents and render the procurement of new patents a useless exercise. *See* Chiron *Amicus* Br. at 27; Celltech *Amicus* Br. at 5. Genentech also disagrees with the assertions that biotechnology patents will be limited to

extremely narrow claims, that biotechnology patent applications will be burdened by large numbers of "trivial" examples, or that biotechnology patent holders are especially dependent on the doctrine of equivalents because of uncertainty in the field.

The *Festo* rule will not cripple biotechnology investments. Assertions to the contrary are not consistent with Genentech's twenty-five years' experience in the laboratory, before the PTO, in the courts, and in the business of commercial biotechnology. A patent applicant's fundamental objective in seeking patent protection is to obtain literal claim coverage for commercially important products or methods based on the invention. It is not a rational business strategy for a biotechnology company to prepare a patent application that can literally support only relatively narrow claims and hope that the doctrine of equivalents will preserve a commercially feasible scope of protection in the future.

Other objections also fail to withstand rigorous consideration. Chiron, for example, asserts that biotechnology patent applicants are unable to describe and claim anything more than a single exemplified cDNA sequence. *See* Chiron *Amicus* Br. at 12-14. Numerous U.S. patents granted to Chiron and others flatly contradict this assertion.[4] The courts as well as the PTO have found DNA

---

[4] For example, U.S. Patent No. 6,277,590, assigned to Chiron, claims a mammalian "PACE 4" endoproteinase or a functional mutant thereof having substitutions at up to 20% of the residues of a specified reference sequence.

U.S. Patent No. 6,087,144, assigned to Genentech, claims tyrosine kinase polypeptides with reference to coding nucleic acids that hybridize under stringent conditions to (and hence bear a substantial structural similarity to) a reference cDNA.

and protein claims of some breadth to fully comply with the requirements of the patent statute. *See, e.g., Amgen, Inc. v. Chugai Pharm. Co.*, 927 F.2d 1200, 1212-14 (Fed. Cir. 1991) (broader claims invalid, but claim to DNA "consisting essentially of a DNA sequence encoding human erythropoietin," with no reference to either a specific DNA or amino acid sequence, not invalid for lack of enablement); *In re Wands*, 858 F.2d at 740 (35 U.S.C. § 112 enablement rejection of claims to assays requiring monoclonal antibody proteins defined only in terms of immunological specificity reversed).

Chiron also voices concern that biotechnology patent applications will be burdened with hundreds or thousands of trivial examples, representing the needless expenditure of resources by patent applicants, because the Federal Circuit has allegedly adopted a "rule" that one cannot claim a genus of sequence-based products (DNA or protein molecules) without expressly describing the sequence of each member of the genus. These concerns derive from a naïve misapprehension of the controlling law, and they do not reflect current PTO practice.

The patent law, and in particular the law relating to chemical inventions (which in the view of the Federal Circuit includes biotechnology inventions, *Chugai*, 927 F.2d at 1206 ("[A] gene is a chemical compound, albeit a complex one.")), has never required that an applicant make and test every member of a large genus to obtain comprehensive claims. Rather, to enable a genus, the patent specification must teach the skilled worker how to make and

---

U.S. Patent No. 6,235,975, assigned to the University of California, claims "Leafy Cotyledon 1"-encoding nucleic acids with requirements for sequence-specific DNA binding by the polypeptide product, hybridization under stringent conditions to a reference cDNA, and at least 85% identity between the encoded amino acid sequence and a reference amino acid sequence.

use species commensurate in scope with the genus through no more than routine experimentation. *See In re Angstadt*, 537 F.2d 498 (C.C.P.A. 1976); *see also Lilly*, 119 F.3d at 1569 (observing that "enablement of a genus [may be met] by showing the enablement of a representative number of species within the genus," citing *Angstadt*); *In re Wands*, 858 F.2d at 740. Moreover, it is not fatal to a claim if a specified genus includes some inoperative embodiments—for example, compounds that do not exhibit the useful properties possessed by the working examples—so long as the specification teaches how to identify the species that are useful for the disclosed purposes and to distinguish them from those that are not. *See In re Angstadt*, 537 F.2d at 502-03; *In re Wands*, 858 F.2d at 739-40.

This point was broached by the Federal Circuit several years ago in the specific context of claims to DNA encoding a particular amino acid sequence. Owing to the "degeneracy" of the genetic code, very many DNA sequences can encode the same amino acid sequence. In a case that reversed a PTO rejection for obviousness of DNA encoding a protein of previously unknown sequence, the court, in *dicta*, invited the PTO to consider whether a claim directed to any DNA encoding the specified protein was fully enabled. The court noted that the patent disclosure provided only the one naturally occurring DNA sequence encoding the protein. *See In re Deuel*, 51 F.3d 1552 (Fed. Cir. 1995). The PTO has apparently declined to make rejections on such grounds, as it continues to routinely issue claims of the form questioned by the court. *See, e.g.*, patents cited *supra* at note 4. This practice is consistent with the perspective of the scientists to whom biotechnology patent disclosures are directed, who understand that "degenerate" DNA sequences are functionally equivalent for the purpose of encoding a given protein.

Neither does the written description requirement of 35 U.S.C. § 112 require the exposition of each sequence within

a claimed genus. The Federal Circuit has held that "a description of a genus of cDNAs may be achieved by means of a *representative number* of cDNAs, defined by nucleotide sequence, falling within the scope of the genus." *Lilly*, 119 F.3d at 1569 (emphasis added). The PTO has adopted this standard as a metric for determining whether a patent application describes the invention in sufficient detail to demonstrate that the applicant was "in possession" of a claimed generic invention at the time the application for patent was filed. *See* M.P.E.P. § 2163. Based on the biotechnology patents issued since the PTO's promulgation of guidelines for written description under 35 U.S.C. § 112, *see* M.P.E.P. § 2163 and patents cited *supra* note 4, it is evident that the PTO accepts that a single example of a DNA sequence encoding a protein of defined sequence is very often sufficiently "representative" of the degenerate DNA sequences encoding the protein to support a claim to the genus.

In summary, neither Federal Circuit law nor the policies or practices of the PTO require an applicant to burden the disclosure with numerous examples of trivial variations of a "sequence" invention in order to secure comprehensive *literal* claim coverage for a reasonable scope of variants.

Chiron also urges this Court to facilitate access to the doctrine of equivalents for biotechnology applicants in view of the "unpredictability" associated with the evaluation of enablement by the PTO. Chiron *Amicus* Br. at 16-17. In a sense, it is true that the result of an enablement inquiry cannot be predicted with certainty. Enablement under 35 U.S.C. § 112 is a question of law which takes into account a number of factual determinations, including those defined by scientific principles. *See In re Wands*, 858 F.2d at 736-37. Enablement is a requirement that cannot be evaluated and applied according to simple formula. But patent practice involves many other fact-based questions of law;

chief among these is obviousness under 35 U.S.C. § 103. *See Graham*, 383 U.S. at 17-18. Though many of these tests require the balancing of substantial amounts of factual evidence and each involves some legal "uncertainty," none has a debilitating effect on patent procurement or enforcement.

In the case of the enablement requirement, the controlling law for biotechnology inventions is by now well-developed, and the PTO has provided detailed guidance to its examiners to ensure its uniform application in biotechnology applications. *See* M.P.E.P. § 2164 *et seq.*[5] Certainly the outcome of an enablement inquiry is more "predictable" than a determination of whether a given product performs substantially the same function in substantially the same way to achieve substantially the same result as a patented counterpart. *See Festo*, 234 F.3d at 591-92 (Plager, J., concurring). In Genentech's view, the application of the enablement requirement is not so fraught with difficulty as to require this Court to intercede on behalf of any particular class of patentees.

B. The clarity and predictability resulting from the *Festo* rule will promote investment in the biotechnology industry.

Legal certainty encourages wise investments. A mechanism that enables innovators, competitors, and investors to precisely gauge the scope of commercial rights associated with a patent will promote more informed business decisions. Such informed decisions are much more likely to stimulate investment in the biotechnology industry

---

[5] *See also* U.S. Patent & Trademark Office, *Training Materials for Examining Patent Applications with Respect to 35 U.S.C. Section 112, First Paragraph—Enablement: Chemical-Biotechnical Applications*, available online at <http://www.uspto.gov/web/offices/pac/dapp/oppd/1pecba.htm>.

and reward its innovators than are decisions based on uncertain predictions linked to the outcome of litigation over speculative claims under the doctrine of equivalents.

Uncertainty is anathema to the economic health of this industry. An equivalence analysis, as applied prior to the decision of the court below, introduced considerable uncertainty into any business decision that relied on the breadth of a patent. *See Festo*, 234 F.3d at 592 (Plager, J., concurring).

None of the formulations used by the courts to determine the "substantial identity" or "insubstantial differences" of claim elements provides certainty for patent owners or the public as to the enforceable scope of patent claims. This is particularly true in biotechnology, where to date only one structurally defined biomolecule has been found to infringe a "sequence" claim through equivalents. *See Amgen, Inc. v. Hoechst Marion Roussel, Inc. and Transkaryotic Therapies, Inc.*, 126 F. Supp. 2d 69 (D. Mass. 2001) (claim to erythropoietin ("EPO") protein held infringed by an EPO product differing only by the absence of one terminal amino acid residue from the 166-amino acid sequence literally required); *see also Festo*, 234 F.3d at 597-598 (Lourie, J., concurring).

Patent applicants, and particularly those developing biotechnology products for clinical medicine, realize that an effective scope of rights is necessary to secure commercially relevant protection for the products they intend to develop. The *Festo* rule will encourage these applicants to support their broad claims in their patent applications and in the prosecution history. Such complete disclosures will fully enable the public to practice all of the claimed subject matter when it passes into the public domain at the conclusion of the patent term.

For genomics inventions, it is particularly easy to determine what the range of proximal equivalents will be

since they will all relate to a narrow universe of known polypeptide structural modifications. It is possible to obtain literal claim coverage for a reasonable scope of variants by providing a complete written description and an enabling disclosure commensurate with the genus claimed, generally including an experimental demonstration of the biological function asserted for the prototypical compound.

CONCLUSION

For the foregoing reasons, *amicus curiae* Genentech, Inc., respectfully asks this Court to affirm the judgment of the Court of Appeals.

Respectfully submitted,

Jeffrey P. Kushan,
Counsel of Record
David L. Fitzgerald
Marinn F. Carlson
POWELL, GOLDSTEIN, FRAZER
& MURPHY LLP
1001 Pennsylvania Ave. NW
Washington, D.C. 20004
Tel: (202) 347-0066

October 31, 2001

No. 00-1543

Supreme Court, U.S.
OCT 31 2001
OFFICE OF THE CLERK

IN THE

Supreme Court of the United States

FESTO CORPORATION,

Petitioner,

—v.—

SHOKETSU KINZOKU KOGYO KABUSHIKI CO., LTD., a/k/a SMC CORPORATION and SMC PNEUMATICS, INC.,

Respondents.

ON WRIT OF CERTIORARI TO THE UNITED STATES COURT OF APPEALS FOR THE FEDERAL CIRCUIT

BRIEF OF AMICUS CURIAE MEDIMMUNE, INC. IN SUPPORT OF RESPONDENTS

HARVEY KURZWEIL
Counsel of Record
BRADFORD J. BADKE
HENRY J. RICARDO
DEWEY BALLANTINE LLP
1301 Avenue of the Americas
New York, New York 10019
(212) 259-8000

Counsel for Amicus Curiae MedImmune, Inc.

October 31, 2001

BEST AVAILABLE COPY

TABLE OF CONTENTS

	PAGE
STATEMENT OF INTEREST	1
SUMMARY OF ARGUMENT	2
ARGUMENT	4
I. CELLTECH HAS MISCHARACTERIZED THE FACTS OF ITS DISPUTE WITH MEDIMMUNE	4
A. MedImmune Did Not Engage in Copying and Has Not Reneged on its License Agreement with Celltech	4
B. Prosecution History Estoppel Precluded Infringement Both Before and After the *Festo* Decision	5
II. THE LITIGATION BETWEEN CELLTECH AND MEDIMMUNE IS AN EXAMPLE OF WHY *FESTO* SHOULD BE AFFIRMED	8
CONCLUSION	9

TABLE OF AUTHORITIES

Cases: PAGE

Festo Corp. v. Shoketsu Kinzoku Kogyo Kabushiki Co., 234 F.3d 558 (Fed. Cir. 2000) ..... *passim*

Southwall Techs., Inc. v. Cardinal IG Co., 54 F.3d 1570 (Fed. Cir. 1995) 7

Warner-Jenkinson Co. v. Hilton Davis Chem. Co., 520 U.S. 17 (1997) 3, 7, 8

STATEMENT OF INTEREST

MedImmune, Inc. ("MedImmune") is a biotechnology company based in Gaithersburg, Maryland.[1] MedImmune manufactures and sells Synagis®, a prescription drug that treats premature infants vulnerable to respiratory syncytial virus ("RSV"), the leading cause of infant hospitalization due to bronchitis and bronchiolitis. Synagis® contains "humanized" antibody molecules that help fight RSV. A humanized antibody molecule is a hybrid antibody that is created by combining human DNA with the DNA of another species (*e.g.*, a mouse). This combined DNA creates a hybrid (*i.e.*, "humanized") antibody molecule that is similar to the naturally occurring human antibody except for certain segments, derived from the mouse DNA, that appear in the naturally occurring mouse antibody that fights the same virus. Humanized antibodies serve as close substitutes for natural human antibodies, which are extremely difficult to reproduce in laboratory conditions.

MedImmune is the defendant in a lawsuit pending in the English High Court of Justice brought by the United Kingdom subsidiary of *amicus curiae* Celltech Group plc. (coilectively referred to as "Celltech"). Celltech has alleged that MedImmune owes it a royalty on sales of Synagis® pursuant to a license agreement between the parties that requires MedImmune to pay a royalty for sales of products that would infringe Celltech's U.S. patent but for the license.[2] Celltech has conceded that

[1] Written consent to the filing of this brief has been obtained from the parties and is lodged herewith. Counsel for a party did not author this brief in whole or in part. No person or entity other than the *amicus curiae*, its members, or its counsel made a monetary contribution to the preparation and submission of this brief.

[2] Although Celltech filed its case in England, Celltech has asserted that whether Synagis® falls within the scope of a valid claim of its U.S. patent is governed by U.S. patent law.

Synagis® would not literally infringe its patent. Celltech therefore relies entirely on the doctrine of equivalents to support its claim to royalties. MedImmune has sought dismissal of Celltech's suit on the basis that prosecution history estoppel prevents Celltech from relying on the doctrine of equivalents with respect to Synagis®. MedImmune's position is that prosecution history estoppel barred Celltech's claims both before and after the decision of the United States Court of Appeals for the Federal Circuit in *Festo Corp. v. Shoketsu Kinzoku Kogyo Kabushiki Co., Ltd.*, 234 F.3d 558 (Fed. Cir. 2000), and it will pursue dismissal of Celltech's suit as a matter of law regardless of how this Court rules in the *Festo* case. But before *Festo*, a patentee such as Celltech could construct a creative doctrine of equivalents argument that amounted to nothing more than an attempt to recapture the precise subject matter surrendered during prosecution. *Festo* has, or course, brought this tactic to an end.

SUMMARY OF ARGUMENT

Celltech purports to provide the Court with "a 'real world' example of how a licensee who entered into a pre-*Festo* license can use *Festo*'s complete bar to avoid paying very substantial royalties."[3] Cloaking itself with the concerns expressed by Judge Michel of the Federal Circuit in a concurring and dissenting opinion, Celltech warns that *Festo* would encourage licensees of biotechnology patents to engage in a two-step method for liability-free copying, working a great injustice against both Celltech in particular and licensors of biotechnology patents in general. Suggesting that it has befallen this fate, Celltech argues that it will lose the benefit of its license to MedImmune if *Festo* is affirmed. Regrettably, in its *amicus* brief Celltech has now provided this Court with a misleading account of the facts of its dispute with MedImmune, requiring MedImmune to submit this brief.

[3] Brief of *Amicus Curiae* Celltech Group PLC. in Support of Petitioner, at 2.

For the reasons set out below, an affirmance of *Festo* would have no such effect. Celltech has grossly mischaracterized MedImmune's development of Synagis®, the parties' expectations in connection with their license, and the scope of Celltech's patent rights in order to create the misimpression that *Festo* will cause an unjust result. In the process, Celltech has failed to advise the Court of the most important fact of all: that *Celltech obtained its patent only after amending its claims to exclude the specific feature found in the prior art and contained in Synagis® that it is now improperly trying to recapture under the doctrine of equivalents in its case against MedImmune.* Indeed, during prosecution, Celltech repeatedly distinguished its claimed invention from the prior art on the basis of the amendment at issue. This is a classic case of prosecution history estoppel under *Warner-Jenkinson Co. v. Hilton Davis Chem. Co.*, 520 U.S. 17 (1997) and its progeny, in which a patentee attempts to use the doctrine of equivalents to recapture subject matter that it surrendered during patent prosecution.

While a reversal of the *Festo* decision would not breathe life into Celltech's case because of *Warner-Jenkinson*, Celltech's U.K. case is nonetheless an illustration of why greater certainty concerning the doctrine of equivalents would be of considerable value to prevent patentees from attempting to rewrite the prosecution history, and it supports an affirmance of *Festo*. Celltech admits, as it must, that there is no literal infringement.[4] Before *Festo*, patentees like Celltech would disclaim

[4] *Id.* at 7.

coverage of subject matter during prosecution in order to obtain allowance of their claims, only to advance creative arguments later in litigation in order to reclaim what was surrendered in the Patent Office. In the absence of *Festo*, a resourceful plaintiff such as Celltech would be able to force a defendant such as MedImmune to spend millions of dollars in legal and technical expert fees during discovery, claim construction proceedings, summary judgment motions, and perhaps even trial, to defeat an unmeritorious allegation of infringement under the doctrine of equivalents. By providing more certainty as to the scope of patent claims to patentees and competitors alike based on the public record, *Festo* prevents this kind of wasteful litigation.

ARGUMENT

I. CELLTECH HAS MISCHARACTERIZED THE FACTS OF ITS DISPUTE WITH MEDIMMUNE

A. MedImmune Did Not Engage in Copying and Has Not Reneged on its License Agreement with Celltech

Celltech paints MedImmune as an unscrupulous licensee that combed through the file history in search of a claim amendment to provide cover for a single insignificant alteration to Celltech's invention. Indeed, Celltech goes so far as to accuse MedImmune of "pirat[ing] Celltech's invention with impunity," and cheating Celltech out of its "vested rights" in the license agreement between the parties. Such allegations are unfounded.

In fact, MedImmune had already developed Synagis®, the life-saving drug that Celltech characterizes as the product of piracy, and performed clinical testing of it *before* Celltech's patent ever issued. As the Court is no doubt aware, Celltech's U.S. file history was not available to MedImmune until after the patent issued, so MedImmune had no opportunity to use it in the development of Synagis®.

Moreover, the *Festo* decision has *not* upset any settled expectations with respect to Celltech's license to MedImmune. Nowhere in this license agreement did MedImmune agree to pay a royalty in connection with sales of Synagis®, which belies any notion that the parties structured their agreement based on such an assumption. Instead, the license agreement provides that MedImmune must pay a royalty on sales of any product that would infringe Celltech's patent but for the license. The parties, therefore, left unresolved whether Synagis® would infringe Celltech's U.S. patent but for the license. Given the words of the license agreement and Celltech's concession that Synagis® does not fit within the literal scope of Celltech's patent claims, Celltech had no reasonable expectation of royalties from sales of Synagis®.

B. Prosecution History Estoppel Precluded Infringement Both Before and After the *Festo* Decision

Although it claims to be a victim of the *Festo* decision, Celltech's brief says remarkably little about the claims of its patent, the prosecution history that led to them, or why Celltech believes the outcome of its English case would have been any different before the *Festo* decision. The reason for this silence is that Celltech is simply attempting to recapture through the doctrine of equivalents subject matter that it was forced to relinquish during patent prosecution for reasons relating to patentability.

To the extent Celltech hopes to persuade this Court that it is a victim of injustice, a brief discussion of Celltech's patent is in order. Celltech's brief creates the misimpression that its patent provides a detailed blueprint that

identifies a precise sequence of more than 1300 individual amino acids (or "residues") needed to form a humanized antibody molecule. In fact, Celltech's patent claims a far more modest development that differed from the prior art with respect to only *two* of the more than 1300 residues that comprise an antibody molecule.

A "humanized" antibody is simply a mouse antibody that has been genetically altered to be more like the naturally occurring human antibody that fights a given disease. The purpose of this modification is to minimize the possibility that a human patient will reject an antibody generated by a mouse cell. The humanizing process involves altering DNA to replace certain residues in the mouse antibody with the residues that appear in the corresponding human antibody molecule. The prior art taught that it was critical for certain amino acids in the mouse antibody to remain unchanged, particularly the residues located in binding areas known as complementarity determining regions ("CDRs"), plus certain additional residue positions not located in the CDRs.

More specifically, Celltech's patent claims a humanized antibody molecule where mouse amino acids are retained at the CDRs, plus positions 6, 23, 24 and 49 of the antibody heavy chain. Celltech's patent does not specify which amino acids should appear at the claimed positions 6, 23, 24 and 49 (or any other positions). Instead, the only "invention" described by the claims is the identification of the four residue *positions* (in addition to the CDRs) that must be mouse residues, whatever amino acids they may be.

During prosecution, the Patent Office rejected Celltech's claims based on a humanized antibody described in a prior art reference by Riechmann, *et al.* In order to overcome this rejection, Celltech amended its claims to require *mouse* residues at positions 23 and 24, as compared to the antibody disclosed in the Riechmann reference which had *human* residues at positions 23 and 24. Celltech also argued, on several different occasions, that this amendment, which differed from the prior art by only *two* amino acids, distinguished the claims over the prior art. Even before *Festo*, Celltech would have been estopped from relying on the doctrine of equivalents to recapture the specific subject matter (*human* amino acids at positions 23 and 24) it had clearly and unequivocally surrendered during prosecution to avoid the prior art, even if *some* range of equivalents remained available. *See, e.g., Southwall Techs., Inc. v. Cardinal IG Co.*, 54 F.3d 1570, 1579 (Fed. Cir. 1995) ("[P]rosecution history estoppel limits the range of equivalents available to a patentee by preventing recapture of subject matter surrendered during prosecution of the patent."). This principle is the foundation of the doctrine of prosecution history estoppel.

Having obtained its patent by distinguishing its "invention" from the prior art based on a difference with respect to just two amino acid positions, Celltech now attempts to minimize this same distinction in its suit against MedImmune. Celltech concedes that Synagis® does not have the claimed mouse residue at position 23. Instead, Synagis® has a human residue which is different from the mouse residue at that position. By no stretch of the imagination can a *change* of the residue at position 23 to a human amino acid constitute the equivalent of retaining a different mouse residue at position 23. This is particularly so in light of Celltech's claim amendments and repeated distinction of prior art antibodies that, like Synagis®, contained a human amino acid at position 23. Therefore, under *Warner-Jenkinson*, Celltech is precluded from relying on the doctrine of equivalents to cover humanized antibodies that have a human residue at position 23. ***This is the specific subject matter that Cell-***

tech surrendered during prosecution in response to prior art rejections, and it cannot be recaptured.

This is a classic case of prosecution history estoppel falling squarely within *Warner-Jenkinson* and its progeny. The practical effect of the *Festo* decision in a suit like Celltech's is to speed the dismissal of the case as a matter of law because no range of equivalents is available. Celltech's *amicus* brief appears to be an attempt to delay such a dismissal of its English action, which is stayed until this Court rules in the *Festo* case.

II. THE LITIGATION BETWEEN CELLTECH AND MEDIMMUNE IS AN EXAMPLE OF WHY *FESTO* SHOULD BE AFFIRMED

The facts of Celltech's case illustrate why the *Festo* decision provides much needed certainty for competitors seeking guidance on the scope of patents based on the prosecution history. A less rigorous application of prosecution history estoppel would allow patent holders to disavow their statements to the Patent Office in order to assert tenuous infringement claims that impose immense litigation costs on defendants to defeat them. In addition, uncertainty as to the scope of patent claims often leads potential licensees to take licenses and pay royalties as ransom to avoid litigation that may threaten important products. These concerns are even greater in the biotechnology field where unmeritorious claims may be unusually difficult to dismiss early in litigation due to the complicated technology involved and the lengthy prosecution histories that often precede the issuance of biotechnology patents.[5]

[5] Celltech's additional argument that *Festo* should not be applied "retroactively" is an affront to the doctrine of *stare decisis* that would create two different infringement regimes depending on the effective filing date of a patent application, which may itself be a hotly contested issue.

CONCLUSION

In what appears to be an attempt to prolong its English litigation, Celltech has created the misimpression that the fears of Judge Michel have come to fruition. However, Celltech's brief is misleading in several important respects. First, Celltech has falsely characterized MedImmune as a pirate of Celltech's technology, knowing full well that MedImmune developed Synagis® before Celltech's patent issued. Second, Celltech has misrepresented the scope of its own patent, suggesting much broader coverage than it actually has. Finally, Celltech failed to disclose its specific surrender of subject matter through arguments and claim amendments made during patent prosecution, giving rise to a prosecution history estoppel under pre-*Festo* authority. The only lesson to be learned from Celltech's *amicus* brief is the need for greater certainty with respect to the available scope of equivalents, particularly in the biotechnology field where patentees may assert years after the fact that unclaimed molecular structures were simply obvious variations of the claimed invention, even if such assertions fly in the face of what was surrendered during prosecution. The burden of clarity as to the scope of the claims belongs with the patentee. The certainty provided by *Festo* can curtail efforts, like Celltech's, to disavow statements made before the Patent Office in complicated fields like biotechnology.

Respectfully submitted,

HARVEY KURZWEIL
Counsel of Record
BRADFORD J. BADKE
HENRY J. RICARDO
DEWEY BALLANTINE LLP
1301 Avenue of the Americas
New York, New York 10019
(212) 259-8000

Counsel for Amicus Curiae
MedImmune, Inc.

October 31, 2001

Supreme Court, U.S.
FILED
OCT 31 2001
OFFICE OF THE CLERK

No. 00-1543

In The

Supreme Court of the United States

FESTO CORPORATION,

Petitioner,

v.

SHOKETSU KINZOKU KOGYO KABUSHIKI CO., LTD.,
a/k/a SMC CORPORATION AND
SMC PNEUMATICS, INC.,

Respondents.

On Writ Of Certiorari
To The United States Court Of Appeals
For The Federal Circuit

BRIEF OF AMICI CURIAE APPLERA CORPORATION (APPLIED BIOSYSTEMS AND CELERA GENOMICS), APPLIED MATERIALS, INC., CISCO SYSTEMS, INC., MICRON TECHNOLOGY, INC., AND ORACLE CORPORATION IN SUPPORT OF RESPONDENTS

MATTHEW D. POWERS
Counsel of Record
EDWARD R. REINES
WEIL, GOTSHAL & MANGES, LLP
201 Redwood Shores Parkway
Fifth Floor
Redwood Shores, CA 94065
(650) 802-3000

Counsel for Amici Curiae

COCKLE LAW BRIEF PRINTING CO., (800) 225-6964
OR CALL COLLECT (402) 342-2831

BEST AVAILABLE COPY

34 pp

TABLE OF CONTENTS

Page

I. STATEMENT OF INTEREST 1

II. INTRODUCTION 4

III. THE FEDERAL CIRCUIT'S *FESTO* RULING SHOULD BE AFFIRMED 7

A. The Flexible Bar Rule Should Not Be Adopted By This Court 7

1. Use Of The Doctrine Of Equivalents To Ensnare Claim Scope Beyond The Narrowing Language The Applicant Selected At The Point Of Disputed Patentability Should Not Be Permitted .. 8

a. The "Supreme Court Precedent" Argument Does Not Justify Overturning The Federal Circuit's Ruling 9

b. The "Actual Surrender" Argument Does Not Justify The Flexible Bar Rule 10

c. Far From Being "Straightforward," The Flexible Bar Rule Creates Ambiguity And Uncertainty 12

d. *Festo* Will Not "Destroy" The Doctrine Of Equivalents 14

e. The Quality Of Patent Prosecution Will Not Be Reduced By *Festo* 16

f. The Suggestions That The *Festo* Rule Helps Large Entities More Than Small Entities Is Unsupported 18

TABLE OF CONTENTS – Continued

Page

g. *Festo* Does Not Eliminate Any Vested Rights 19

2. *The Proposed "Unforeseeabilty" Exception To The Festo Rule Is Not Worth Its Substantial Cost* 20

a. Only Infrequently Will An Amendment Covering Equivalents Be Unforeseeable 20

b. The Benefits Of A Foreseeability Test Are Not Worth Its Substantial Cost 23

B. All Narrowing Amendments Related To Patentability Should Give Rise To A Prosecution History Estoppel 26

TABLE OF AUTHORITIES

Page

CASES

Al-Site Corp. v. VSI Int'l Corp., 174 F.3d 1308 (Fed. Cir. 1999) 13

In re: Barr, 444 F.2d 588 (C.C.P.A. 1971) 15

Exhibit Supply Co. v. Ace Patents Corp., 315 U.S. 126 (1942) 9, 11, 20

Fay v. Cordesman, 109 U.S. 408 (1883) 10

Festo Corp. v. Shoketsu Kinzoku Kogyo Kabushiki Co., Ltd., 234 F.3d 558 (Fed. Cir. 2000) ..... *passim*

Genentech, Inc. v. Novo Nordisk A/S, 108 F.3d 1361 (Fed. Cir. 1997) 27

Goodyear Dental Vulcanite Co. v. Davis, 102 U.S. 222 (1880) 10

Gould v. Mossinghoff, 711 F.2d 396 (D.C. Cir. 1983) 27

Hurlbut v. Schillinger, 130 U.S. 456 (1889) 10

Shepard v. Carrigan, 116 U.S. 593 (1886) 10

Universal Oil Products Co. v. Globe Oil & Refining Co., 322 U.S. 471 (1944) 27

Warner-Jenkinson Co., Inc. v. Hilton Davis Chem. Co., 520 U.S. 17 (1997) 15, 20, 25, 26

STATUTES

35 U.S.C. § 102 25

35 U.S.C. § 103 ..... 24, 25

35 U.S.C. § 112 ..... 22, 26, 27

TABLE OF AUTHORITIES

Page

OTHER

ALAN M. HALE, PATENTING MANUAL (2d ed. 1983) 22

Brief for Litton Systems, Inc. (Litton Systems Brief) 20

Brief for Petitioner (Pet. Brief) 4, 9, 12, 14, 16, 26

Brief for the United States (U.S. Brief) 5, 21

Brief of Federal Circuit Bar Association (F.C.B.A. Brief) 12, 17, 18

Brief of the American Bar Association (A.B.A. Brief) 14, 17

Brief of the American Intellectual Property Law Association (A.I.P.L.A. Brief).....10, 11, 16

Brief of the Institute of Electrical and Electronics Engineers (I.E.E.E. Brief).....5, 21

MANUAL OF PATENT EXAMINING PROCEDURE § 2173.05(b) (7th ed. 1998)..... 22

ROBERT C. FABER, LANDIS ON MECHANICS OF PATENT CLAIM DRAFTING (4th ed. 2000)..... 21-22

U.S. Patent No. RE 1,527 10

U.S. Patent No. RE 1,904 10

U.S. Patent No. RE 4,364 10

I.

STATEMENT OF INTEREST

This brief is submitted by Applera Corporation (including Applied Biosystems and Celera Genomics), Applied Materials, Inc., Cisco Systems, Inc., Micron Technology, Inc., and Oracle Corporation (referred to collectively as "Amici").[1]

Amici are companies whose technological contributions epitomize the innovation that the Constitutional mandate for a patent system is intended to promote. Indeed, Amici's technological developments have led to: (1) important patents that have been recognized by courts, competitors, and consumers as protecting major advances that have both enabled and fueled a technological revolution, and (2) the wide-spread acceptance of their technology-based products to the point where such products have become staples of the global economy.[2] Amici are also active in asserting *and* defending against numerous patent infringement claims, and thus cannot be categorized as generally plaintiffs or generally defendants in patent infringement cases.

---

[1] Pursuant to Rule 37.6, none of the parties or their counsel has contributed substantively or monetarily to the preparation of this brief. Specifically, only Amici and their counsel have contributed to the preparation or submission of this brief. The consents of the parties are being lodged herewith.

[2] For example, Applied Biosystems' DNA sequencing products, Applied Materials' semiconductor chip making equipment, Celera's genomic information, Cisco's internet equipment, Micron's computer memory chips, and Oracle's database software are each acknowledged as the gold standard in their respective fields.

These qualities place Amici in a balanced position to advise the Court concerning the Questions Presented. Specifically, the future of each of the Amici is dependent on a balance between the effective protection of its technology through a robust patent system and the ability to evaluate the patent landscape with sufficient clarity to permit continued innovation and to minimize the cost of litigation encouraged by uncertainty. This duality forces Amici to approach the Questions Presented with balance, and does not allow them to adopt one position or the other in patent cases based simply on whether a position is pro-plaintiff or pro-defendant.

Amici undertake this joint brief because they believe their shared viewpoint adds a unique perspective. The amicus briefs submitted thus far are sponsored by entities that generally have a one-sided interest in the potency of patents – but that have little reason to be concerned about excesses inflicted if the system instills too much power in the threat of patent assertions. The university licensing amici benefit from an increase in the threat posed by patents, but have no fear of excesses because they rarely if ever make or sell products themselves. Individual inventors have a one-sided interest in the strength of patents for the same reason.[3]

Similarly, the views on the Questions Presented set forth by interest groups representing attorneys must be

[3] Other amici are companies that are uniquely built on narrow products that are heavily patented, or are companies whose patent litigation and licensing efforts outshine their success with technology-based products. These companies also have a relatively untempered motivation to strengthen patents.

evaluated with a recognition of the personal benefit many members of such groups obtain from the addition of more legal tests and analyses in patent law and from litigation-inducing uncertainty. In addition, such groups would benefit from the expanded toleration of professional inexactness, or even sloppiness, that is in some ways the chief argument for the elimination of the certainty-advancing rules set forth by the Federal Circuit in *Festo Corp. v. Shoketsu Kinzoku Kogyo Kabushiki Co., Ltd.*, 234 F.3d 558 (Fed. Cir. 2000) ("*Festo*"). That these groups attempt to overturn the *Festo* decision is understandable – but appears to stem from the one-sided nature of their interest in the patent system.

There are two additional voices before the Court which come from a balanced perspective: the United States and the Institute Of Electrical and Electronics Engineers (I.E.E.E.). As described further below, Amici agree with much contained in the briefs of those entities, but with important points of difference that are set forth below.

In sum, Amici do not have a general interest that is either for or against the power of patents or for or against plaintiffs or defendants. Rather, Amici, much like the Constitutional founders and this Court, are interested in balancing a robust patent system to protect the development of technology with clear rules that minimize conflict, litigation, and uncertainty, and therefore encourage innovation. Accordingly, Amici are hopeful that their views will aid the Court in its resolution of the Questions Presented.

II.

INTRODUCTION

The essence of the argument against the Federal Circuit's decision in *Festo* is that the Federal Circuit supposedly inflicted a "crippling blow" to the patent system. Pet. Brief at 42. According to Petitioner and supporting amici, if this Court affirms that ruling "investment in patentable inventions will sharply and very substantially decline." *Id.*

Amici submit this brief to report to this Court that the "sky above the patent landscape" is *not* falling. Amici have many important products whose sales are protected by patents. Indeed, without meaningful patent protection, Amici's industry leading products could be copied or mimicked by the many competitors chasing them. Yet, Amici are confident that the patent system will be strengthened by clear ground rules that enhance respect for valid patent rights and provide innovators with added clarity as to the boundaries of patent rights. Amici are also confident that the *Festo* rule will not facilitate the misappropriation of patented technology. Indeed, Amici have not reduced investment in technology or patent applications because of *Festo*, and would have *more* confidence in the wisdom of continuing to innovate if this Court affirms *Festo*. As set forth in greater detail below, Petitioner's speculation about the dire effect of affirming *Festo* simply does not withstand scrutiny.[4]

---

[4] Many of the critics of *Festo* make arguments reflecting parochial interests. In some instances, claims are made that particular types of technologies or particular products are special and will be disparately affected by *Festo*. Amici believe that *Festo* sets forth neutral principles equally applicable to all technologies and products, and thus should be evaluated based upon its overall impact on the technology community and the public interest.

The *Festo* rule recognizes that, when the Patent Office rejects proposed claims and an applicant makes changes to the particular claim language at the point of disputed patentability,[5] it is the obligation of the applicant to *claim* the scope of coverage to which it believes it is entitled. This is common sense. Simply put, when both the resources of the applicant and the resources of the Patent Office are directly focused on setting the permissible boundary of coverage at the precise point of disputed patentability, they should resolve the issue by determining that line clearly and carefully at that time. There should not be room in the system to allow narrow language to be added to gain allowance of the patent with the belief that disputes can be deferred until litigation about the proper scope of the claim at the point of disputed patentability.

Amici United States and I.E.E.E. correctly acknowledge this straightforward logic. U.S. Brief at 26 ("The courts can properly insist that prosecution history estoppel requires applicants to draft claim amendments to encompass literally all the equivalents they wish to include."); I.E.E.E. Brief at 23 ("Where the limiting effect

---

[5] The "point of disputed patentability" refers to the portion of the claimed subject matter where a narrowing amendment is made to avoid a Patent Office rejection. This includes amendments made for existing rejections as well as anticipated rejections expressly preempted by an applicant.

of an amendment's language with respect to an accused device should have been foreseen by a person reasonably skilled in the art, the patentee should not be permitted to ignore that effect by utilizing the doctrine of equivalents . . . "). However, these amici further argue that, where an applicant could not have foreseen at the time of its narrowing claim amendment how to draft claim language that would have covered the accused product, an absolute bar rule preventing reliance on the doctrine of equivalents may be "unfair." Accordingly, they argue that this fairness concern outweighs the significant cost in uncertainty of providing "fudge" room to the applicant during subsequent litigation. Thus, these amici propose a narrow foreseeability exception to the *Festo* rule.[6]

As explained further below, there are relatively few situations in which proper claim drafting could not have covered an accused device due to the unforeseeability of the claim language. On balance, the cost of requiring a foreseeability analysis (which could turn into a trial within a trial) in nearly every case involving prosecution history estoppel is not justified by those few situations. Indeed, allowing such an exception to the *Festo* rule would impose on all the considerable expense of litigating the foreseeability issue (which would most likely require the consideration of substantial evidence, and the

[6] As explained further below at pages 23-25, the contours of the proposed "foreseeability" exception, as it would be implemented in practice, are not particularly clear. Amici understand it to refer to the foreseeability of claim language that would be sufficiently broad to cover a feature of an accused product that is not literally encompassed by the chosen claim language.

resolution of potentially nebulous factual disputes) as patent holders attempt to keep doctrine of equivalents claims alive. Simply put, there are enough tests and subtests in patent litigation as it stands. However, a narrow foreseeability exception to the *Festo* rule, applicable in only limited circumstances where claim language to cover a major technological development is truly unforeseeable, would be superior to the flexible bar rule. The flexible bar rule is intolerable because it allows those who *could* have foreseeably selected appropriate claim language to avoid Patent Office scrutiny on a disputed issue of patentability by merely waiting until the litigation process before seeking to notify the public of the claimed scope of their property right.

III.

THE FEDERAL CIRCUIT'S *FESTO* RULING SHOULD BE AFFIRMED

Amici agree with the United States' neutral statement of the two Questions Presented. First, Amici address Petitioner's request that this Court adopt the so-called "flexible bar" rule. Second, Amici address Petitioner's request that this Court hold that some types of narrowing amendments made for reasons of patentability should be unlimited by the doctrine of prosecution history estoppel.

A. The Flexible Bar Rule Should Not Be Adopted By This Court

In *Festo*, the Federal Circuit ruled that patentees should be bound to the claim language they specifically

add during prosecution at the point of disputed patentability, reasoning that the flexible bar rule is unworkable. The first section below establishes that a patentee should not be permitted to obtain claim scope through the doctrine of equivalents that is broader in scope than the plain language it added at the point of disputed patentability, but which it could have foreseeably attempted to include in the claims if it had believed that it was entitled to broader claim coverage.[7] The second section establishes that the circumstances in which a feature of an accused product could not have foreseeably been included within the claim amendment are so infrequent that the burden imposed by requiring this evidentiary issue to be yet another issue litigated in every case involving prosecution history estoppel is unjustified.

1. Use Of The Doctrine Of Equivalents To Ensnare Claim Scope Beyond The Narrowing Language The Applicant Selected At The Point Of Disputed Patentability Should Not Be Permitted

In *Festo*, the Federal Circuit explained in detail that, if an applicant narrows its patent claims to avoid a patentability rejection, the applicant should not be able to defer until litigation a clear decision about the extent to which it can gain coverage outside the specific language it selected at the point of disputed patentability. *See Festo*, 234 F.3d at 576-77. As common sense dictates, if broader

---

[7] Of course, whether the Patent Office would have granted the foreseeable and broader claim scope is an issue that the applicant unfairly side-steps, if the Petitioner's analysis is accepted.

claim language were in fact foreseeable and the applicant for some reason elected *not* to seek such claim scope at the point in the Patent Office process when the applicant and the examiner were focused on the limits of patentability, a rule permitting arguments for expanded claim scope later should be barred.

Those attacking the Federal Circuit's sound rule set forth a series of arguments, including some that are superficially seductive and thus demand a response. They are addressed in turn.

a. The "Supreme Court Precedent" Argument Does Not Justify Overturning The Federal Circuit's Ruling

Petitioner contends that the Federal Circuit's ruling is improper because the "spirit" of this Court's precedent mandates the flexible bar rule. Pet. Brief at 33.

This argument must be rejected because it disregards this Court's most relevant analysis, and the leading case on the question of prosecution history estoppel. In *Exhibit Supply Co. v. Ace Patents Corp.*, 315 U.S. 126, 136 (1942), Chief Justice Stone concluded that an amendment constitutes a disclaimer of *all* the subject matter outside a limitation added at the point of disputed patentability: "By the amendment he recognized and emphasized the difference between the two phrases and proclaimed his abandonment of *all* that is embraced in that difference." (emphasis supplied) (citations omitted).

In the face of *Exhibit Supply*, and without addressing it, Petitioner chiefly relies upon four cases from the late

1800s. However, all of the patent claims involved in those cases state that they include within their literal scope "equivalents" of the described subject matter and/or "substantially" what is described. *Hurlbut v. Schillinger*, 130 U.S. 456, 463 (1889) (quoting U.S. Patent No. RE 4,364); *Shepard v. Carrigan*, 116 U.S. 593, 594 (1886) (quoting patent at issue); *Fay v. Cordesman*, 109 U.S. 408, 413-14 (1883) (quoting U.S. Patent No. RE 1,527); *Goodyear Dental Vulcanite Co. v. Davis*, 102 U.S. 222, 223 (1880) (quoting U.S. Patent No. RE 1,904). Thus, such cases are better viewed as literal infringement cases under the very different claiming conventions of that era. This is important because these applicants were expressly *claiming* that they were entitled to more than the terms of the specific language of the amendment – even in the face of a patentability challenge. Of course, this Court acted logically in those cases to the extent it concluded that the applicants did not *disclaim* claim scope that they were in fact specifically *claiming*.

b. The "Actual Surrender" Argument Does Not Justify The Flexible Bar Rule

Those attacking the *Festo* rule argue at great length that the Federal Circuit ignored the general principle that an estoppel should apply only to the subject matter that is actually surrendered. *See, e.g.*, A.I.P.L.A. Brief at 7 ("A clear and unmistakable surrender of otherwise patentable subject matter should be the touchstone of prosecution history estoppel . . . "). These critics insist that what is surrendered is not determined by the perimeter of the language selected by the applicant to delineate its right,

but will instead often lie somewhere in the zone between the impermissibly broad original limitation and the narrowing language added by the applicant. *See, e.g., id.* However, this argument is unhelpful because it assumes its conclusion. Specifically, it assumes that the applicant's selection of claim language to define the scope of its patent right at the point of disputed patentability is somehow the *wrong* line of demarcation as to what is surrendered, without adding substantive content as to why it would be improper.

Not only is this argument unhelpful, it is wrong. As noted above, as long ago as *Exhibit Supply*, this Court determined that the applicant's selection of particular narrowing language to avoid a patentability rejection constitutes the proclamation that "all that is embraced" in the difference between the original language and the amended language is abandoned. *Exhibit Supply*, 315 U.S. at 136. Where the applicant has made a choice not to expose a request for greater claim scope to the Patent Office for examination, and therefore is properly understood not to be claiming such subject matter, it is fair to conclude that such subject matter is surrendered, as set forth in *Festo*. The suggestion that the "true surrender" created by an amendment is in an undefined zone best determined in litigation after Patent Office examination ignores the fact that a surrender occurs at the time of the amendment giving rise to the estoppel. As such, the scope of surrender caused by an amendment is best measured at the time it could be changed by the applicant and before it becomes an effective patent right that can be wielded in litigation. In addition, deferring a decision about the extent of surrender seriously undermines the

notice function of patent claiming. Finally, the cost of any uncertainty about the scope of a surrender should be borne by the party creating it (the applicant that sought less claim coverage than it later asserted it was entitled to seek), rather than the public as a whole.

In short, the most accurate and effective measure of what the applicant has surrendered *is* the specific language selected by it at the specific point of disputed patentability. The Federal Circuit recognized and relied upon this reality. Its ruling should not be disrupted.

c. Far From Being "Straightforward," The Flexible Bar Rule Creates Ambiguity And Uncertainty

Based on its day-in and day-out responsibility for adjudicating patent cases, the Federal Circuit concluded that the flexible bar rule was difficult to apply and created unjust uncertainty. *See Festo*, 234 F.3d at 577. Some of those attacking the *Festo* rule insist the application of the flexible bar rule is straightforward. *See* Pet. Brief at 32-33; *but see* F.C.B.A. Brief at 11 ("While the flexible bar has not always been applied with ideal clarity or consistency . . . "). This claim is inconsistent with Amici's substantial experience and, moreover, is disproved by Petitioner's own example.

To attempt to prove that the flexible bar rule is straightforward to apply, Petitioner relies chiefly on the following example: A claim is narrowed from language that generically covers all attachments, to language that covers only "glue." This narrowing is provoked by prior art that discloses the use of a nail as an attachment. From

this hypothetical, Petitioner argues that the flexible rule is straightforward to apply because it should be obvious that a screw is so much like a nail that it would be clear that coverage of a screw would be estopped.

Even if it were clear that the flexible bar rule would permit the non-infringing use of a screw attachment in view of the "glue" attachment claim limitation – and Amici's litigation experiences give it no comfort on this score – Petitioner's own example highlights the magnitude of the uncertainty created by the flexible bar rule. There are obviously a vast number of different attachments, including tape, magnets, epoxy, suction cups, clips, hooks, Velcro, hinges, latches, staples, rivets, and welds. Trying to determine whether these attachments are more like "glue" (and thus not subject to estoppel according to Petitioner's analysis), or are more like a "nail" (and thus subject to an estoppel), vividly illustrates the uncertainty of the flexible bar rule and the lack of clear principles to guide one attempting to employ that rule. Is a weld closer to glue or a nail? Is tape close enough to glue because it uses adhesive? Is a magnet more like a nail because it is metal? How about Velcro?

Concern that something like a staple or rivet could be found to be an equivalent of glue is not speculative. Indeed, in *Al-Site Corp. v. VSI Int'l Corp.*, 174 F.3d 1308, 1316 (Fed. Cir. 1999), the Federal Circuit recently upheld a jury verdict that a glue, a rivet, and a staple are all structurally equivalent attachments.

The flexible bar rule is difficult, if not impossible, to apply in a principled way in most cases, as Petitioner's own example demonstrates, and as Amici's experience

confirms. In real cases where the technology is even more complicated than Petitioner's simple example, the difficulty of applying the flexible bar rule is compounded.

d. *Festo* Will Not "Destroy" The Doctrine Of Equivalents

Those attacking the *Festo* rule use extreme hyperbole to argue that this rule essentially prevents the doctrine of equivalents from meaningfully protecting patent rights. *See, e.g.*, A.B.A. Brief at 2 ("the new rule all but abolishes the doctrine of equivalents for a large proportion of the more than 1.2 million unexpired patents"). There are several fallacies underlying this argument.

First, this argument ignores the fact that the *Festo* rule applies only to the particular words added to narrow the claim at the point of disputed patentability. Typically, this is only a small fraction of the claim. Accordingly, the doctrine of equivalents *is* in fact available with respect to most of the terms of patent claims that are narrowed for purposes of patentability. Most critics get this wrong, and incorrectly suggest that the doctrine of equivalents would be barred generally. *See, e.g.*, Pet. Brief at 2 ("the new principles announced by the Federal Circuit will effectively strip most existing patents of the vital protection provided by the doctrine of equivalents"). The limited nature of the *Festo* rule severely curtails any potential that it will generally preclude coverage of subject matter that would otherwise properly fall within the doctrine of equivalents.

Second, because the *Festo* rule only applies to narrowing language added at the point of disputed patentability, any doctrine of equivalents allegation barred by the *Festo* rule necessarily relates to a material limitation at the point of disputed patentability. This Court stressed in *Warner-Jenkinson Co., Inc. v. Hilton Davis Chem. Co*, 520 U.S. 17, 40 (1997), that the doctrine of equivalents is a limited doctrine designed only to protect a patentee against insubstantial changes. As a matter of logic, insubstantial changes from the claimed subject matter would typically lie far from the point of patentability. Thus, the likelihood is not great that the difference between a new product and the narrowing claim language right at the point of disputed patentability would somehow be insubstantial.

Third, the suggestion that it is generally easy to make a trivial modification to a product to fall outside of an added claim limitation ignores the broad latitude that a patent applicant has to define its claims. For instance, in the example used by Petitioner, and referenced in the prior section at pages 12-13, above, if the applicant truly believed it was entitled to a broad attachment claim in the face of the "nail" prior art it could have simply claimed "attachments that are not nails." *See In re: Barr*, 444 F.2d 588, 595 (C.C.P.A. 1971) (holding that negative claims are permissible). This would have covered every attachment except a nail, assuming that the Patent Office agreed that such a broad claim was patentable. Likewise, the applicant could have sought several claims covering several attachment methods, or could have claimed a "liquid attachment" or a "chemical-based" attachment or "an attachment including at least one sticky surface." All of

these claims would likely have literally encompassed paste (the differentiating element of the product that the applicant would like to find infringing in the hypothetical), rather than narrowly limiting the claim only to "glue attachments" as the applicant hypothetically did. In addition, if the applicant believed the prior art with the nail attachment should not bar patentability because the particular nature of the attachment was unimportant to the novelty of the invention, it could have appealed and overcome the rejection if it were correct.

In sum, the suggestion that it is often easy to make trivial changes at the point of disputed patentability that allow one to steal inventions without falling within the literal scope of a patent claim is analytically incorrect, and inconsistent with Amici's experience generally.

e. The Quality Of Patent Prosecution Will Not Be Reduced By *Festo*

Critics of the *Festo* rule contend that this rule somehow degrades patent prosecution. However, many of the changes predicted by the critics make patent examination more effective, not less.

Specifically, *Festo* critics predict that applicants who believe a rejection is unwarranted will now appeal, rather than simply narrowing the claim and accepting an estoppel. *See, e.g.*, Pet. Brief at 39 ("the number of appeals will increase dramatically"); A.I.P.L.A. Brief at 14 ("the effects of *Festo* on the USPTO would be generally negative, involving more rejections and more appeals"). A threshold problem with this analysis is that, even under Petitioner's rule, an estoppel would be accepted with such an

amendment, albeit uncertain in scope. In any event, improper rejections *should* be appealed. A healthy appellate process is obviously not something to avoid, particularly if it facilitates the issuance of a patent with claims that provide the applicant with the broadest coverage appropriate, while also providing the public with clear notice of what falls within the scope of the patent. Moreover, Petitioner's rule creates an unhealthy incentive for applicants to acquiesce in meritless rejections based on the hope that they can obtain a narrow patent easily and use the doctrine of equivalents to attempt to expand coverage as needed.

A second change in patent prosecution practice predicted by the critics is that applicants will not be as ambitious in the scope of the claims that they submit to the Patent Office, will be more likely to search for relevant prior art before submitting their claims to the Patent Office for examination, and will therefore submit narrower claims at the outset. *See, e.g.*, A.B.A. Brief at 19 ("Time-consuming and expensive pre-filing searches are more important now . . . ."); F.C.B.A. Brief at 9 ("Applicants may draft narrow claims that are likely to be allowed without amendment.").

Amici believe that any such change in practice would be quite positive. Unfortunately, too many applicants engage in the practice of submitting overbroad "Hail Mary" claims with the hope that an overworked Patent Office employee will allow such claims through the process without rejection. Moreover, if applicants were to search for prior art and refine the claims that they submit to the Patent Office in the first place, the process would obviously be more refined, more accurate, faster and, all

things considered, *less* expensive. In any event, any conceivable incremental increase in the cost of patent prosecution due to the *Festo* rule pales in comparison to the concomitant savings in product development or patent litigation. Importantly, none of these changes prevents applicants from aggressively pursuing the full breadth of coverage to which they believe they are entitled.

In sum, Amici believe that the predicted changes, assuming they occur, will *improve* patent prosecution.

f. The Suggestions That The *Festo* Rule Helps Large Entities More Than Small Entities Is Unsupported

Some critics of the *Festo* rule imply that it helps large entities more than small entities. F.C.B.A. Brief at 9-10. This is not, in fact, the case.

First, a major benefit of the *Festo* rule, by any measure, is that the patent landscape is much clearer for those seeking to innovate. Because both large and small entities innovate, they both benefit.

Second, some critics suggest that the *Festo* rule makes patent prosecution costly. *Id.* However, clearly the most important impact of the *Festo* rule to prosecution is the importance of the selection of claim language added at the point of disputed patentability. Once an applicant facing a patentability rejection prepares a response including a proposed amendment, and has analyzed the basis for a potential rejection, the cost of preparing an amendment is already entirely incurred. At that point, the amount of time or expense it takes to select particular

words, over other potential words, for the amendment obviously is not large. For this reason, selecting the proper language is not really a question of dollars and cents. Indeed, encouraging patent attorneys to select the proper claim language at the point of disputed patentability is best achieved by emphasizing to them through legal rules that they cannot be sloppy when selecting language with the expectation that any "missed," but patentable, subject matter can be reclaimed later through litigation.

Finally, small entities would benefit from a system that reduces uncertainty and the expensive litigation encouraged by such uncertainty. As noted above, the cost of litigation spawned by uncertainty greatly exceeds any marginal increase in the cost of prosecution (if it does not in fact *decrease*) that could be expected under the *Festo* rule. Because smaller entities generally have fewer resources to address the expense of litigation, *Festo*'s certainty-advancing rule would work to the benefit, not detriment, of small entities.[8]

In any event, whether the patent owner is large or small, the effect of a rule that tolerates the sloppy selection of claim language at the point of disputed patentability is too costly for this Court to adopt.

g. *Festo* Does Not Eliminate Any Vested Rights

Critics of *Festo* contend that it somehow eliminates vested rights. Specifically, critics contend that applicants

---

[8] This is most true for small companies that are not patent litigation savvy or experienced, and whose voice this Court ironically will not hear in this proceeding for that very reason.

narrowing their claims at the point of disputed patentability to obtain patent rights had a vested interest that cannot legally be taken away in subject matter *beyond* what they claimed as the scope of their right. *See generally* Litton Systems Brief. Even if *Festo* were not supported by this Court's decision in *Exhibit Supply* – when in fact it is – this position would still not reflect reality. The suggestion that patent applicants consciously claim less than they feel they are entitled to, relying on the doctrine of equivalents, is nonsense. Moreover, doctrine of equivalents law has evolved and changed significantly through the years (including the rules set forth in this Court's decision in *Warner-Jenkinson*), so any notion of settled, vested rights in particulars of that doctrine never legitimately existed. This is especially true given the clear conclusion of this Court in *Exhibit Supply* that an applicant abandons "all that is embraced in [the] difference" between the original claim language and the narrowed claim language. *Exhibit Supply*, 315 U.S. at 136.

2. The Proposed "Unforeseeabilty" Exception To The *Festo* Rule Is Not Worth Its Substantial Cost

a. Only Infrequently Will An Amendment Covering Equivalents Be Unforeseeable

The United States and the I.E.E.E. both conclude that, where claim language is foreseeable at the time of a narrowing amendment at the point of disputed patentability, but such language goes unused by the applicant, the applicant should not be permitted to rely on the doctrine of equivalents to capture such unclaimed subject

matter after patent issuance. *See* U.S. Brief at 24; I.E.E.E. Brief at 23.

In fact, in only a fraction of the cases will language that would capture an accused device have been truly unforeseeable at the time of amendment. This is particularly true because such amendments are usually crafted years after the invention is made, and at a time when the technology selected by potential infringers is increasingly visible. Of course, if the technology sought to be covered by the amendment is well-known when the amendment is made, that diminishes any chance of showing that an amendment was unforeseeable.[9]

This leaves the less frequent situation of after-arising technology. Properly analyzed, the issue is not whether after-arising technology was foreseeable, but whether claim language that could encompass that technology was foreseeable. However, it is generally possible to use a broad array of claim techniques to claim "after-arising" technology. Indeed, a central mission of patent prosecution is to devise language that will both encompass future developments that incorporate the patented invention, and avoid unnecessary limitations. *See* ROBERT C. FABER,

---

[9] The United States apparently holds open the possibility of including an "after-arising technology" exception to the *Festo* rule, in addition to the foreseeability exception. However, if claim language is foreseeable, the fact that the accused infringer has innovated should not justify an additional exception to the *Festo* rule. Nevertheless, the presence of after-arising technology may in some cases make it easier to prove the unforeseeability of the amendment. Accordingly, it is not clear why the United States proposed these as two different exceptions.

LANDIS ON MECHANICS OF PATENT CLAIM DRAFTING X-2 (4th ed. 2000) (noting that the drafter must write claims that "cover competitive products which neither the inventor nor the attorney thought of or could even have imagined at the time, but which employ the concept of the invention."). Examples of the form of such language include the following: (1) generic language, such as "light source" instead of "lamp" if light is what is required for the invention, (2) terms of degree such as "mostly," (3) broadening modifiers such as "substantially" or "essentially," (4) functional limitations such as those expressly authorized under 35 U.S.C. Section 112(6), (5) negative limitations such as "but not . . . ", and (6) language of result such as "wherein the . . . ." *See, e.g.*, MANUAL OF PATENT EXAMINING PROCEDURE § 2173.05(b) (7th ed. 1998) (discussing acceptable uses in claims of "relative terminology" such as "about", "essentially" and "substantially"); ALAN M. HALE, PATENTING MANUAL 72 (2d ed. 1983) ("a claim is made broader by using generic names"). Thus, in most cases, claim language can cover after-arising technology so long as it is consistent with the patentability of the claimed invention.

In sum, it is the standard protocol of patent attorneys to avoid limitations that are unnecessary and to draft claims that fully cover the concept of the invention, rather than merely narrow embodiments of that invention. This responsibility should be, and is generally, heightened when the patent attorney is selecting narrowing language at the point of disputed patentability in the face of a Patent Office rejection. Accordingly, only in a relatively few cases will an amendment covering equivalents be truly unforeseeable to competent patent counsel.

b. The Benefits Of A Foreseeability Test Are Not Worth Its Substantial Cost

As demonstrated above, there will be relatively few cases where subject matter excluded by an amendment at a point of disputed patentability could not have foreseeably been captured at the time of the amendment. The cost and difficulty of litigating this issue in virtually every case of prosecution history estoppel cannot be justified by those limited situations.

A foreseeability exception would be a difficult issue to litigate, depending on what the ground rules are. Some thorny questions are: (1) Is the foreseeability measured through the eyes of a technologist or a patent attorney or agent? Since the patent attorney or agent is normally the person who crafts claim language and is the person trained to maximize the scope of the claim as appropriate, it would add even more artificiality to the proposed legal test to analyze the question from the perspective of one skilled in the relevant technical art. However, to add yet another hypothetical actor in the world of patent law (e.g., a person of ordinary skill in the art of claim drafting in the relevant technical art) would appear, at first blush, to be no more appetizing. (2) To what extent are the particular circumstances of the particular patent prosecution taken into account in determining foreseeability? Because objective analyses are performed in the context of the facts of the case at hand, some actual facts would need to be considered. For example, would the hypothetical person be assumed to know the entire state of the technical art, as is the hypothetical person in the obviousness analysis, or would they know only the technical art

of record in the Patent Office? Would they instead be presumed to know all technical art of which they can be shown to have been actually aware, or all technical art of which they knew or should have known? Creating and applying such rules will not be easy. **(3)** What needs to be foreseeable, the technology uncaptured by the claim language or the potential claim language that would cover that technology? It is one thing to analyze whether the claim could foreseeably have been drafted to encompass after-arising technology, for example, by using the standard patent attorney tool kit of claiming techniques described above at page 22. It is another to measure whether the after-arising technology in the context of the claimed invention could have been foreseen. It is yet another matter to evaluate whether the after-arising technology could have been foreseen at all. **(4)** Does the after-arising technology have to be non-obviously different from existing technology? A natural patent litigation test to determine whether technology is "after-arising" at all is whether the technology would have been non-obvious (*see* 35 U.S.C. § 103). Borrowing this test would be convenient, but would add substantial complexity to the case. **(5)** How does one determine whether potentially foreseeable claim language would have been granted in view of the patentability rejection in the Patent Office, if that matters? Does a patentability test need to be performed on the potentially foreseeable language to determine if the claim would have issued from the Patent Office from the perspective of an examiner, or would it be performed as though the claim had issued with a presumption of

validity? **(6)** What is the general standard for foreseeability? Does it borrow the well-established, but elaborate concepts of novelty and non-obviousness developed elsewhere in patent law? *See* 35 U.S.C. §§ 102, 103.

The evidence submitted on these issues could be voluminous and complicated to evaluate. Moreover, the legal rules that develop may well turn out to be difficult to apply in many cases.

Litigating the foreseeability issue would be particularly expensive – even beyond the normal cost of addressing such potentially complicated issues. The value of the *Festo* rule is that businesses are in a much better position to pursue safely a very expensive product development program without fear that the resultant product could be shut down after a costly trial and sales to now-orphaned customers. Because prosecution history estoppel is a question of law, *see Warner-Jenkinson*, 520 U.S. at 39 n.8, claims that are barred by that doctrine are resolved reliably on summary judgment under *Festo*. The foreseeability exception, if adopted, would therefore become yet another breeding ground of uncertainty in such a case for both sides. Simply put, patent litigation is expensive and unpredictable enough for all parties without forcing the litigation of this proposed exception, which should properly only apply in a relatively few cases anyway.

While the foreseeability issue may have equitable appeal as an abstract concept, as a practical matter it simply is not worth its considerable weight.

B. All Narrowing Amendments Related To Patentability Should Give Rise To A Prosecution History Estoppel

The Federal Circuit, with little dissent (one judge out of twelve), concluded that all narrowing amendments related to the statutory requirement of patentability give rise to prosecution history estoppel. This unexceptional ruling is based on substantial precedent and should be affirmed. *See Warner-Jenkinson*, 520 U.S. at 40-41 (if an amendment "had a purpose *unrelated* to patentability, a court must consider that purpose in order to decide whether an estoppel is precluded.") (emphasis supplied).

Petitioner appears to acknowledge that the touchstone of whether a prosecution history estoppel arises is, and should be, whether a narrowing amendment is made for reasons of patentability. *See* Pet. Brief at 26. Accordingly, Petitioner argues that the Federal Circuit's interpretation is flawed simply because it construes the term "patentability" too broadly. *Id.* ("To the contrary, 'patentability' has an established and limited meaning."). Petitioner's chief argument is that the term "patentability," for purposes of an estoppel analysis, is controlled by the words chosen for the names of the chapters in Title 35. *Id.* Specifically, Petitioner argues that only amendments in response to objections based on the provisions of Chapter 10 of Title 35 can create an estoppel because that Chapter is entitled "Patentability Of Inventions." *Id.* Thus, Petitioner argues that narrowing amendments in response to rejections based on provisions of other chapters, such as Section 112 of Title 35, cannot create an estoppel. *Id.* ("Section 112 is in the chapter describing the

'Application For Patent.' "). This argument dangerously elevates semantics over substance.

It is well-established that the adequacy of disclosure is a fundamental aspect of patentability. *See, e.g., Gould v. Mossinghoff*, 711 F.2d 396, 397 n.2 (D.C. Cir. 1983) ("Patent applicants must disclose information specified by 35 U.S.C. § 112 to obtain a patent."); *see also Universal Oil Products Co. v. Globe Oil & Refining Co.*, 322 U.S. 471, 484 (1944) (commenting that the "*quid pro quo*" for receiving a patent is "disclosure of a process or device in sufficient detail to enable one skilled in the art to practice the invention . . . and the same precision of disclosure is likewise essential to warn the industry concerned of the precise scope of the monopoly asserted.").

Section 112 requires, for example, that a patent applicant enable the full scope of a claimed invention. *See Genentech, Inc. v. Novo Nordisk A/S*, 108 F.3d 1361, 1365 (Fed. Cir. 1997) ("to be enabling, the specification of a patent must teach those skilled in the art how to make and use the full scope of the claimed invention"). It is common during patent prosecution for the Patent Office to reject claims because the patent specification does not enable the full scope of the broad claims that are submitted. To take a common situation, if an applicant submits a specification which contains one example, but attempts to encompass thousands of examples in the claim it seeks, the Patent Office may reject that claim under Section 112(1). Specifically, the Patent Office may reject the claim because, on the facts presented, the full scope of the claim is not enabled. For instance, the specification may only teach how to make and use limited aspects of the broadly claimed subject matter. If claim language is added in

response to such a rejection to narrow the claim to the one disclosed example which is taught, one can readily see that the prosecution history estoppel issues are not meaningfully different than when an applicant narrows a claim in response to a rejection based on prior art. Precisely how broad or narrow the claims should be in view of the teachings of the specification is something that should be resolved when the Patent Office rejects the application, and the applicant is crafting an amendment to attempt to obtain a patent. An applicant should not be permitted to simply add narrowing language to avoid a Section 112 rejection to obtain a patent, while unfairly leaving the critical question of the appropriate scope of the claims in view of the submitted disclosure to await litigation.

In short, Petitioner's argument based on the chapter names in Title 35 ignores, among other things, the fact that Section 112 unquestionably sets forth important rules of patentability. There is no good reason why narrowing amendments to obtain a patent over a rejection based on such patentability concerns should not give rise to a prosecution history estoppel. Petitioner's argument based

on the chapter designations is simply too superficial and should be rejected.

Respectfully submitted,

Amici Curiae
Applera Corporation
Applied Materials, Inc.
Cisco Systems, Inc.
Micron Technology, Inc.
Oracle Corporation

MATTHEW D. POWERS
Counsel of Record

EDWARD R. REINES
WEIL, GOTSHAL & MANGES LLP
201 Redwood Shores Parkway
Fifth Floor
Redwood Shores, CA 94065
(650) 802-3000

Supreme Court, U.S.
FILED
OCT 31 2001
OFFICE OF THE CLERK

(48)

No. 00-1543

IN THE

Supreme Court of the United States

OCTOBER TERM, 2001

FESTO CORPORATION,

Petitioner,

v.

SHOKETSU KINZOKU KOGYO KABUSHIKI CO., LTD.,
A/K/A SMC CORPORATION AND SMC PNEUMATICS, INC.,

Respondents.

ON WRIT OF CERTIORARI TO THE UNITED STATES COURT OF APPEALS FOR THE FEDERAL CIRCUIT

BRIEF OF INTEL CORPORATION, CYPRESS SEMICONDUCTOR CORPORATION AND UNITED TECHNOLOGIES CORPORATION AS *AMICI CURIAE* IN SUPPORT OF RESPONDENTS

Terry E. Fenzl
Counsel of Record
Alan H. Blankenheimer
Howard Ross Cabot
Dan L. Bagatell

BROWN & BAIN, P.A.
2901 North Central Avenue, Suite 2000
Phoenix, Arizona 85012-2788

(602) 351-8000

Counsel for Amici Curiae

October 31, 2001

BEST AVAILABLE COPY

30

TABLE OF CONTENTS

Table of Authorities iii

Statement of Interest 1

Summary of Argument 3

Argument 5

I. Patentees Should Be Barred from Invoking the Doctrine of Equivalents to Broaden the Enforceable Scope of Limitations that They Agreed to Narrow in Order to Have Their Patents Issued 6

A. Prosecution History Estoppel Reins in the Doctrine of Equivalents by Clarifying What Remains in the Public Domain and by Preventing Patent Holders from Unfairly Reclaiming in Litigation What Was Disclaimed During Patent Prosecution 6

B. Prosecution History Estoppel Will Clarify the Scope of Claims and Promote Certainty and Predictability of Outcomes Only If It Operates as a Complete Bar 8

1. A "Flexible Bar" Test Leads to Unpredictable Outcomes and Offers No Coherent and Practical Standard to Measure Patents' Scope 8

2. Uncertainty Over Patents' Enforceable Scope Discourages Innovation and Increases the Amount and Cost of Litigation 11

3. The Intermediate Approach Advocated by the Solicitor General Still Would Result in Unacceptable Uncertainty and Unpredictability 14

C. A Complete Bar Rule Reflects the Public's Fair Conclusion that When a Patentee Narrows Its Claims to Obtain a Patent, It Releases Everything Within the Scope of the Original Claims But Not Within the Scope of the Amended Claims 16

D. A Complete Bar Rule Is Not Unfair to Patentees 17

1. Patentees Are Estopped Only When They Agree to Set New Boundaries on Their Claims 17

2. A Complete Bar Rule Neither Guts the Doctrine of Equivalents Nor Thwarts Its Purpose to Prevent Fraud on a Patent 18

3. Past Patentees Could Not Reasonably Rely on Any Range of Available Equivalents Because the Scope of Estoppel Was Always Uncertain 20

E. Making Prosecution History Estoppel a Complete Bar Can Only *Improve* Patent Prosecution Practice 21

1. Claiming Could Change Only for the Better 21

2. Even If Applicants Challenge More Rejections, Patents' Scope Should Be Decided in Advance by Presumptively Expert PTO Examiners Rather than Years Later in Patent Litigation 22

3. Inventions Will Not Be Discouraged Because Pioneer Claims Rarely Require Amendments and Non-Pioneer Claims Should Receive a Narrow Range of Equivalents to Begin With 23

II. Prosecution History Estoppel Should Apply to All Amendments Narrowing Claims for Patentability Reasons, Not Just Amendments to Avoid Prior Art 24

A. The Logic of Prosecution History Estoppel Extends to Narrowing Amendments Made to Fully Describe and Distinctly Claim an Invention or Establish Its Utility 24

B. An Exception for Section 112 Amendments Would Swallow the Rule, Allowing Clever Applicants to Evade Estoppel and Reclaim What They Have Disclaimed 25

C. Prosecution History Estoppel Should Depend on the Substance of an Amendment, Not on Its Form 26

III. The Court's Ruling Should Apply Universally and Should Not Be Limited to Prospective Application 27

Conclusion 29

TABLE OF AUTHORITIES

Cases **Page(s)**

ACLARA Biosciences, Inc. v. Caliper Techs. Corp.,
125 F. Supp. 2d 391 (N.D. Cal. 2000) 19

Augustine Med., Inc. v. Gaymar Indus., Inc.,
181 F.3d 1291 (Fed. Cir. 1999) 20, 23

Bai v. L & L Wings, Inc.,
160 F.3d 1350 (Fed. Cir. 1998) 20, 26

Bayer AG v. Elan Pharm. Research Corp.,
212 F.3d 1241 (Fed. Cir.),
cert. denied, 531 U.S. 993 (2000) 8

Bonito Boats, Inc. v. Thunder Craft Boats, Inc.,
489 U.S. 141 (1989) 19

Budinich v. Becton Dickinson & Co.,
486 U.S. 196 (1988) 11

Chevron Oil Co. v. Huson,
404 U.S. 97 (1971) 27, 28

Control Resources, Inc. v. Delta Elecs., Inc.,
133 F. Supp. 2d 121 (D. Mass. 2001) 18

Crawford v. Heysinger,
123 U.S. 589 (1887) 5, 24

Dickinson v. Zurko,
527 U.S. 150 (1999) 22

Diversitech Corp. v. Century Steps, Inc.,
850 F.2d 675 (Fed. Cir. 1988) 20

EMI Group N. Am., Inc. v. Intel Corp.,
157 F.3d 887 (Fed. Cir. 1998) 20

Cases **Page(s)**

Environmental Instruments, Inc. v. Sutron Corp.,
877 F.2d 1561 (Fed. Cir. 1989) 9, 20

Exhibit Supply Co. v. Ace Patents Corp.,
315 U.S. 126 (1942) 5, 6, 14, 16, 20, 28

Festo Corp. v. Shoketsu Kinzoku Kogyo Kabushiki Co.,
234 F.3d 558 (Fed. Cir. 2000) (*en banc*),
cert. granted, No. 00-1543 (U.S.) ..... *passim*

Harper v. Virginia Dep't of Taxation,
509 U.S. 86 (1993) 27

Hughes Aircraft Co. v. United States,
717 F.2d 1351 (Fed. Cir. 1983) 8, 20, 28

KCJ Corp. v. Kinetic Concepts, Inc.,
223 F.3d 1351 (Fed. Cir. 2000) 20

Kinzenbaw v. Deere & Co.,
741 F.2d 383 (Fed. Cir. 1984) 17, 20

Litton Sys., Inc. v. Honeywell, Inc.,
140 F.3d 1449 (Fed. Cir. 1998) 9, 10

Loral Fairchild Corp. v. Sony Corp.,
181 F.3d 1313 (Fed. Cir. 1999),
cert. denied, 528 U.S. 1075 (2000) 25, 26

Markman v. Westview Instruments, Inc.,
517 U.S. 370 (1996) 11, 13

McClain v. Ortmayer,
141 U.S. 419 (1891) 7

Modine Mfg. Co. v. United States Int'l Trade Comm'n,
75 F.3d 1545 (Fed. Cir. 1996) 9

Cases **Page(s)**

Mycogen Plant Science, Inc. v. Monsanto Co.,
252 F.3d 1306, *reh'g denied*,
261 F.3d 1345 (Fed. Cir. 2001) 26, 27

Perkin-Elmer Corp. v. Westinghouse Elec. Corp.,
822 F.2d 1528 (Fed. Cir. 1987) 23

Pfaff v. Wells Elecs., Inc.,
525 U.S. 55 (1998) 11

Quill Corp. v. North Dakota,
504 U.S. 298 (1992) 11

Sage Prods., Inc. v. Devon Indus., Inc.,
126 F.3d 1420 (Fed. Cir. 1997) 18

Sextant Avionique, S.A. v. Analog Devices, Inc.,
172 F.3d 817 (Fed. Cir. 1999) 9

Smith v. Magic City Kennel Club,
282 U.S. 784 (1931) 6, 10, 16

Southwall Techs., Inc. v. Cardinal IG Co.,
54 F.3d 1570 (Fed. Cir. 1995) 9

Sun Studs, Inc. v. ATA Equip. Leasing, Inc.,
872 F.2d 978 (Fed Cir. 1989) 9

Townsend Eng'g Co. v. HiTec Co.,
829 F.2d 1086 (Fed. Cir. 1987) 20

Turbocare Div. v. General Elec. Co.,
264 F.3d 1111 (Fed. Cir. 2001) 26

United Carbon Co. v. Binney & Smith Co.,
317 U.S. 228 (1942) 11

Cases **Page(s)**

Wang Labs., Inc. v. Mitsubishi Elecs. Am., Inc.,
103 F.3d 1571 (Fed. Cir. 1997) 20

Wang Labs., Inc. v. Toshiba Corp.,
993 F.2d 858 (Fed. Cir. 1993) 20

Warner-Jenkinson Co. v. Hilton Davis Chem. Co.,
520 U.S. 17 (1997) ..... *passim*

Weber Elec. Co. v. E.H. Freeman Elec. Co.,
256 U.S. 668 (1921) 6

Wilson Sporting Goods Co. v. David Geoffrey & Assocs.,
904 F.2d 677 (Fed. Cir. 1990) 9

Statutes **Page(s)**

35 U.S.C. § 101 25
35 U.S.C. § 102 ..... 24, 25
35 U.S.C. § 103 ..... 24, 25
35 U.S.C. § 112 ..... 7, 13, 24, 25, 26
35 U.S.C. § 282 22

Other Authorities **Page(s)**

5A DONALD S. CHISUM, CHISUM ON PATENTS
§ 18.05[3][b][ii] (2001) 9

William M. Atkinson, Bruce J. Rose & John A. Wasleff,
Was Festo *Really Necessary?*,
83 J. PAT. & TRADEMARK OFF. SOC'Y 111 (2001) 10

Note, *To Bar or Not to Bar: Prosecution History Estoppel After* Warner-Jenkinson,
111 HARV. L. REV. 2330 (1998) 11, 18, 23

BRIEF OF INTEL CORPORATION, CYPRESS SEMICONDUCTOR CORPORATION AND UNITED TECHNOLOGIES CORPORATION AS *AMICI CURIAE* IN SUPPORT OF RESPONDENTS[1]

Statement of Interest

The questions presented reflect the tension between patentees' need for meaningful patent protection on the one hand and the public's need for fair and clear notice of patents' scope on the other. As companies whose lifeblood is technological innovation, Intel Corporation, Cypress Semiconductor Corporation and United Technologies Corporation (UTC) appreciate both perspectives.

Innovation and intellectual property rights have been cornerstones of our remarkable growth and prosperity. Over the years, we have been responsible for pioneering inventions from the microprocessor to the helicopter, as well as a host of incremental innovations whose cumulative effect has been equally important. We invest massively in designing new technologies and bringing them to market. Intel, the world's largest chip maker, invested nearly $4 billion in researching and developing computer, networking and communications products last year. Cypress annually spends hundreds of millions of dollars (15 to 20 percent of its revenues) researching and developing integrated circuits for cutting-edge computer and communications applications. UTC dedicated $1.3 billion last year to researching and developing products ranging from aerospace equipment to air conditioning systems.

To protect those investments, we vigorously seek patents and enforce them against others. Intel holds a portfolio of over 5,000 patents and received approximately 800 patents last year alone. Cypress was issued over 100 patents last year and expects to file 250 new applications this year. UTC entities hold about 4,500 patents and obtained 400 patents last year. These broad patent portfolios enable us to negotiate cross-licenses with other inno-

---

[1] Counsel of record for all parties have given written consent to file this brief. Those letters of consent have been filed with the Clerk.

No party or counsel to a party has authored this brief in whole or in part, and no person or entity other than the companies submitting this brief and their counsel have contributed monetarily to the preparation or submission of this brief.

vative companies, and some patents generate royalty revenues for us as well. So when others have infringed our hard-earned patents, we have brought patent infringement actions to protect our rights.

As owners of impressive patent portfolios and as three of the best customers of the Patent and Trademark Office (PTO), we strongly support robust patent rights and sensible patent prosecution procedures. On the other hand, we have an equally strong interest in the predictability of the scope of *all* patents. As part of our efforts to develop new products, we regularly evaluate whether technology that we have developed independently may nevertheless infringe on others' patent rights. And in this litigious age, we also have defended against infringement suits by others.

Over the years, we have been increasingly frustrated at the lack of certainty and predictability of patents' scope. We recognize the importance of the doctrine of equivalents, and in appropriate cases we rely on it ourselves. But we also recognize the need to cabin it so that the public has fair notice of what technology it can and cannot freely use. Increasingly, we have been hounded by holders of seemingly modest patents attempting to extort huge settlements. In many cases, the claimants have little hope of proving literal infringement, yet they raise the specter that the doctrine of equivalents will enable them to win large verdicts and shut down key product lines. This occurs even though the patentees often have agreed to narrow the claims of their patents in order to have them issued in the first place.

In our view, the Federal Circuit's *en banc* decision in this case properly balanced the interests of patentees and the public at large and properly defined the relationship between the doctrine of equivalents and prosecution history estoppel. We accordingly urge the Court to affirm the judgment for respondents and hold that

(1) when prosecution history estoppel applies, it completely bars a patent holder from broadening the enforceable scope of a narrowed limitation by resort to the doctrine of equivalents; and

(2) prosecution history estoppel applies whenever a patent applicant narrows a claim limitation for any reason related to patentability, regardless of the form of the change and regardless of the section of the Patent Act that prompted the change.

Summary of Argument

1. The court of appeals correctly held that prosecution history estoppel completely bars a patentee from relying on the doctrine of equivalents to expand the enforceable scope of a claim limitation that it agreed to narrow in order to have the claim issued. Only a complete bar rule serves the twin purposes of prosecution history estoppel: to promote efficiency and innovation by increasing the clarity and predictability of patents' scope, and to promote fairness by binding patentees to concessions they make before the PTO.

Under the "flexible bar" approach, the range of potential equivalents varied unpredictably "within a spectrum ranging from great to small to zero." The only effective limit on the doctrine of equivalents was the prior art, a limit that exists even without prosecution history estoppel. The resulting uncertainty stifled innovation and competition. It takes millions of dollars to develop new products in technology-intensive industries such as those where we compete. When the scope of prosecution history estoppel varied unpredictably, patent counsel could not reliably advise clients on the danger of infringement. The risk of large damage awards and line-stopping injunctions was particularly great because infringement under the doctrine of equivalents is decided by lay jurors who often barely comprehend the technology at issue. As a result, weak claims proliferated but, without any prospect of a definitive answer until after an appeal, defendants faced the Hobson's choice of paying large settlements or taking business-endangering risks.

In contrast, a complete bar rule provides a safe harbor in the otherwise uncertain and unpredictable sea of potential infringement under the doctrine of equivalents. Counsel can now safely advise that patentees will not be able to reclaim through the doctrine of equivalents what they disclaimed during patent prosecution. Even the Solicitor General's proposal of a rebuttable presumption of a complete bar would be problematic in practice because it fails to define precisely when the presumption can be rebutted and what scope of equivalents would then remain.

A complete bar rule also is the only rule that is fair to the public and potential competitors. When an applicant narrows its claims to gain a patent, the public is fairly entitled to conclude that

the applicant has recognized and surrendered the entire difference between the original and amended claims. Simply put, a complete bar properly binds the patentee to its bargain with the PTO. A "flexible bar" unfairly requires the public to speculate about what the patentee and examiner would have, could have, should have or might have done, but did not do.

The complete bar rule is not unfair to patentees because they can be estopped only when and to the extent they agree to narrow their claims. Patentees are in the best position to judge the value and content of their inventions and decide whether to accommodate or traverse an examiner's rejections. A complete bar rule will not gut the doctrine of equivalents because it still will apply to claims that were not narrowed for patentability and even to the unamended portions of claims that were so narrowed. The minimal danger of "unscrupulous copyists" pales in comparison to the greater danger of deterring legitimate innovation. And the complete bar rule has not unfairly changed the legal landscape because the scope of estoppel and equivalents had been uncertain before.

Finally, a complete bar rule will improve rather than hamper patent prosecution practice. If applicants have the incentive to claim more realistically and to search the prior art beforehand, so much the better. If applicants stand their ground and appeal, the scope of their inventions will properly be determined in advance by the expert PTO rather than years later in litigation. And neither logic nor evidence suggests that inventiveness will be discouraged. If anything, more patent applications will be filed because more inventive activity will be encouraged.

2. Prosecution history estoppel should apply to all kinds of amendments narrowing claims to ensure patentability, not simply to amendments admittedly designed to overcome prior art.

The logic and policy rationales behind prosecution history estoppel fully apply to amendments that narrow claims so they adequately describe and distinctly claim the true invention. Regardless of the statutory basis for the amendment, the public is entitled to rely on its ability to practice what the patentee chose not to claim. Furthermore, as experience has shown, an exception for amendments purporting to "clarify" the claims would create a huge loophole that clever patent counsel inevitably would try to exploit.

The Federal Circuit properly did not hold that every amendment clarifying the scope of a claim will trigger an estoppel. True clarifications or corrections that do not narrow the substantive scope of a claim do not and should not result in estoppel. Conversely, however, an amendment does not automatically avoid estoppel simply because it does not take the classic form of an added limitation. The test should depend on the substantive effect of an amendment, not on its form or formal basis.

3. The Court's affirmance of the decision below should apply to all present and future cases. Even if the Constitution permits purely prospective judicial decisionmaking in extraordinary cases, this is no such case. The pre-*Festo* case law was split, and no one could predict or rely on the scope of equivalents that survived a narrowing amendment. If patent applicants proposed narrowing amendments and expected that they could later renege on those agreements and make broader claims in litigation, they acted at their own peril. Applying the "flexible bar" to all past claim amendments would simply extend the uncertainty—and plaintiffs' unfair exploitation of that uncertainty—for twenty more years.

ARGUMENT

Respondents and other *amici* have demonstrated why the Federal Circuit's holdings on both questions presented were consistent with—indeed, compelled by—this Court's prior decisions. Even if the Court finds no definitive answer in its own precedents, however, this brief will demonstrate that the decision below was right as a matter of sound public policy and sensible patent practice.[2]

---

[2] As a threshold matter, the Court cannot simply reverse and leave the issue for Congress to decide, as some of petitioner's *amici* have simplistically suggested. The judiciary created both the doctrine of equivalents and the doctrine of prosecution history estoppel, and now the judiciary must clarify their interplay. The Patent Act of 1952 and its predecessors addressed neither doctrine, much less the relationship between them. If, as in *Warner-Jenkinson Co. v. Hilton Davis Chemical Co.*, 520 U.S. 17, 25-28 (1997), the Court believes that Congress intended to maintain existing law when it adopted the current Patent Act, then the Court should affirm the Federal Circuit's decision. As discussed below, this Court's pre-1952 case law had long held that prosecution history estoppel served as a complete bar to reliance on the doctrine of equivalents as to amended limitations [*see Exhibit Supply Co. v. Ace Patents Corp.*, 315 U.S. 126, 137 (1942)], and the estoppel was not limited to cases of amendments to overcome prior art [*see Crawford v. Heysinger*, 123 U.S. 589, 606 (1887)].

I. PATENTEES SHOULD BE BARRED FROM INVOKING THE DOCTRINE OF EQUIVALENTS TO BROADEN THE ENFORCEABLE SCOPE OF LIMITATIONS THAT THEY AGREED TO NARROW IN ORDER TO HAVE THEIR PATENTS ISSUED

In *Warner-Jenkinson,* this Court held that where a patent holder fails to explain the basis for a claim amendment, the court should "presume that the patent applicant had a substantial reason related to patentability for including the limiting element added by amendment," and that prosecution history estoppel will then "bar the application of the doctrine of equivalents as to that element." 520 U.S. at 33. The Federal Circuit unanimously held [234 F.3d 558, 564, 578 (2000)], and petitioner does not dispute, that where the purpose of an amendment is unclear, that "bar" is absolute, allowing no range of equivalents as to the amended element.

As shown below, the reasons for imposing a complete bar where an amendment's purpose is *unknown* apply with even greater force where the amendment's purpose *is* known—and known to be related to patentability. The Court should therefore affirm that when a patentee has narrowed a claim to obtain a patent, the holder of that patent may not effectively broaden that claim by invoking the doctrine of equivalents as to the added or amended limitations.

A. Prosecution History Estoppel Reins in the Doctrine of Equivalents by Clarifying What Remains in the Public Domain and by Preventing Patent Holders from Unfairly Reclaiming in Litigation What Was Disclaimed During Patent Prosecution

Prosecution history estoppel has long been held to bar a patent holder from using the doctrine of equivalents to effectively *re*claim in litigation subject matter that the patentee *dis*claimed during prosecution of the patent, either by an amendment to a claim limitation or through argument to the patent examiner. *See, e.g., Exhibit Supply Co. v. Ace Patents Corp.*, 315 U.S. 126, 137 (1942); *Smith v. Magic City Kennel Club,* 282 U.S. 784, 790 (1931); *Weber Elec. Co. v. E.H. Freeman Elec. Co.*, 256 U.S. 668, 677-78 (1921). The rule serves to alleviate two highly problematic side effects of the doctrine of equivalents:

First, prosecution history estoppel sharpens edges of the public domain that the doctrine of equivalents otherwise blurs. Patent

claims serve to define the scope of an invention and notify the public that the claimed invention is no longer free to be used. *See* 35 U.S.C. § 112 ¶ 2 ("The specification shall conclude with one or more claims particularly pointing out and distinctly claiming the subject matter which the applicant regards as his invention."); *McClain v. Ortmayer,* 141 U.S. 419, 424 (1891) (the object of this requirement "is not only to secure to [the patentee] all to which he is entitled, but to apprise the public of what is still open to them"). The doctrine of equivalents inherently creates tension with those functions because it provides a penumbra of protection that allows a patent holder to win damages and injunctions even when a defendant has not infringed the literal terms of the claims.

Because the classic "function-way-result" and more recent "insubstantial difference" tests for equivalence are inherently imprecise, "[t]here can be no denying that the doctrine of equivalents, when applied broadly, conflicts with the definitional and public-notice functions of the statutory claiming requirement." *Warner-Jenkinson,* 520 U.S. at 29. Because the doctrine of equivalents "has taken on a life of its own, unbounded by the patent claims" [*id.* at 28-29], prosecution history estoppel has evolved to "place[] reasonable limits" and "insulate" the doctrine of equivalents from unacceptable conflicts with the policies of the Patent Act [*id.* at 34]. As the Federal Circuit aptly put it below, prosecution history estoppel is a "tool that prevents the doctrine of equivalents from vitiating the notice function of claims." *Festo,* 234 F.3d at 564.

Second, prosecution history estoppel prevents patent holders from unfairly restricting their competitors and unjustly enriching themselves. When the objective public record shows that a patentee disclaimed certain subject matter during prosecution, the public is entitled to take the patentee at its word and use that technology freely. *See id.* at 564-65 ("The logic of prosecution history estoppel is that the patentee, during prosecution, has created a record that fairly notifies the public that the patentee has surrendered the right to claim particular matter as within the reach of the patent."). Conversely, patentees would be unjustly enriched if they could renege on bargains they struck during prosecution and demand royalties or damages for technology they agreed to exclude from the scope of their patents.

In short, prosecution history estoppel does two things: it promotes efficiency and innovation by increasing the clarity and predictability of patents' scope, and it promotes fairness by binding patentees to concessions that they make in obtaining patents. As shown below, those twin goals will be frustrated unless patent prosecution estoppel *completely* bars patent holders from relying on the doctrine of equivalents as to claim limitations that were added or narrowed for patentability reasons.

B. Prosecution History Estoppel Will Clarify the Scope of Claims and Promote Certainty and Predictability of Outcomes Only If It Operates as a Complete Bar

The Federal Circuit majority rejected a "flexible bar" approach to prosecution history estoppel because under that approach "it is virtually impossible to predict before the decision on appeal where the line of surrender is drawn." *Festo,* 234 F.3d at 575. Based on decades of frustrating experience, the court recognized that a "flexible bar" is "unworkable" because it cannot "be relied upon to produce consistent results and give rise to a body of law that provides guidance to the marketplace on how to conduct its affairs." *Id.*

As our experience attests, both holdings were exactly right.

1. A "Flexible Bar" Test Leads to Unpredictable Outcomes and Offers No Coherent and Practical Standard to Measure Patents' Scope

Under the classic formulation of the "flexible bar," the range of potential equivalents varied "within a spectrum ranging from great to small to zero." *Hughes Aircraft Co. v. United States,* 717 F.2d 1351, 1363 (Fed. Cir. 1983). Admittedly, however, "there was no precise metric to determine the exact range of equivalents within that spectrum." *Festo,* 234 F.3d at 627 (Linn, J., dissenting). While the Federal Circuit often tried to define and refine the test, its verbiage provided no real guidance on how to determine the permissible scope of equivalents. The cases asked whether "there ha[d] been a clear and unmistakable surrender of subject matter," as judged by "whether a competitor would reasonably believe that the applicant had surrendered the relevant subject matter." *See, e.g., Bayer AG v. Elan Pharm. Research Corp.,* 212 F.3d 1241, 1252 (Fed. Cir.) (citation omitted), *cert. denied,* 531 U.S. 993 (2000). But just how the "reasonable competitor" was to

determine the scope of surrender was never clear. The cases likewise said that the scope of estoppel was to be "determined with reference to the prior art and any amendments and/or arguments made in an attempt to distinguish such art." *Sextant Avionique, S.A. v. Analog Devices, Inc.,* 172 F.3d 817, 826-27 (Fed. Cir. 1999). But the decisions never provided the recipe for combining these ingredients of the analysis.

As a result, the scope of prosecution history estoppel, and therefore the enforceable scope of patents, was notoriously unpredictable. As two of the dissenters below acknowledged, the "difficult and complex" nature of prosecution histories and the technology discussed made resolving the scope of estoppel an "often arduous task" that frequently "g[a]ve rise to differing opinions as to what subject matter [wa]s within the scope of the claim and what ha[d] been surrendered." *Festo,* 234 F.3d at 628. Even Professor Chisum, author of two *amicus* briefs supporting petitioner, candidly recognized the "predictive difficulties of the flexible approach" in his treatise. 5A DONALD S. CHISUM, CHISUM ON PATENTS § 18.05[3][b][ii] at 18-505 to -506 (2001) (citing *Sun Studs, Inc. v. ATA Equip. Leasing, Inc.,* 872 F.2d 978 (Fed Cir. 1989), and *Environmental Instruments, Inc. v. Sutron Corp.,* 877 F.2d 1561 (Fed. Cir. 1989), as illustrations that similar facts often led to very different outcomes).

In practice, the only true "limit" to equivalents recognized in the pre-*Festo* "flexible bar" case law was the prior art. *See, e.g., Litton Sys., Inc. v. Honeywell, Inc.,* 140 F.3d 1449, 1462 (Fed. Cir. 1998) (the doctrine "estops the applicant from later asserting that the claim covers, through the doctrine of equivalents, features that the applicant amended his claim to avoid" as well as "'trivial' variations of such prior art features"); *Modine Mfg. Co. v. United States Int'l Trade Comm'n,* 75 F.3d 1545, 1556 (Fed. Cir. 1996) (the range of equivalents is limited only by the prior art). *But see Southwall Techs., Inc. v. Cardinal IG Co.,* 54 F.3d 1570, 1581 (Fed. Cir. 1995) (estoppel extends beyond the prior art).

Even without prosecution history estoppel, however, the doctrine of equivalents cannot be applied to cover the prior art. *See Wilson Sporting Goods Co. v. David Geoffrey & Assocs.,* 904 F.2d 677, 684 (Fed. Cir. 1990). Thus, prosecution history estoppel matters only if its reach extends *beyond* the prior art. *See Sextant,*

172 F.3d at 827 ("If [defendant] were practicing the prior art, it would have had a complete defense to [plaintiff's] infringement charge, and prosecution history would be irrelevant."). On the critical question *how far* the estoppel extends beyond the prior art, petitioner and its *amici* are conspicuously silent. Of necessity, both they and the dissenters below have avoided defining the "flexible bar" with any precision.[3]

The Federal Circuit thus was correct in observing that under a "flexible bar," "the exact range of equivalents when prosecution history estoppel applie[d] [wa]s virtually unascertainable, with only the prior art marking the outer limits of the claim's scope." *Festo*, 234 F.3d at 577. And when only the prior art marks the outer limits of a claim, prosecution history estoppel is a nullity.[4]

---

[3] Some decisions have noted that prosecution history estoppel prevents a patentee from recapturing its original claim language. *See, e.g., Litton*, 140 F.3d at 1462. That is true, but prosecution history estoppel must mean at least that much or else a narrowing amendment would have no effect whatsoever. Like a prior-art "limit" on equivalence, a prior-claim-language "limit" is no limit at all.

[4] Several of petitioner's *amici* have endorsed the analysis in William M. Atkinson, Bruce J. Rose & John A. Wasleff, *Was* Festo *Really Necessary?*, 83 J. PAT. & TRADEMARK OFF. SOC'Y 111 (2001), but neither of the two complicated refinements of the "flexible bar" test proposed in that article withstands scrutiny.

First, the article suggests (at 137-38) that estoppel should also apply to the extent the examiner perceived the prior art to be broader than the trial court finds it really was. Any distinction between true and perceived prior art, however, runs afoul of this Court's direction in *Warner-Jenkinson* [520 U.S. at 33 n.7] that trial courts must accept the correctness of an examiner's objection. For purposes of prosecution history estoppel, the examiner's view of the prior art *is* the correct one. *See Smith*, 282 U.S. at 789-90 ("Whether the examiner was right or wrong in rejecting the original claim, the court is not to inquire.").

Second, the article proposes (at 138-39) that the bar apply only where the patent holder argues that a device that did not literally infringe the *original* claim nevertheless infringes the *issued* claim under the doctrine of equivalents. That is, a patent holder still could argue that a device infringes by equivalents if it *was* within the literal scope of original claim but is *not* within the literal scope of the amended claim. But this too moots the estoppel. The patent holder could claim coverage all the way up to the original scope even when the examiner rejected the original claim. Even the authors admit (at 139) that "[i]n certain cases, it contributes little to the doctrine of equivalents analysis" and that "[i]f the patentee amended a claim by adding a new element . . . the abandoned claim provides no limits for application of the doctrine of equivalents to the added element."

2. Uncertainty Over Patents' Enforceable Scope Discourages Innovation and Increases the Amount and Cost of Litigation

This Court has long recognized that the scope of patent protection must be clearly defined, otherwise the specter of potential infringement claims will stifle socially useful innovation and competition. An absence of clear limits creates a "zone of uncertainty which enterprise and experimentation may enter only at the risk of infringement claims," and that uncertainty will "discourage invention only a little less than unequivocal foreclosure of the field." *Markman v. Westview Instruments, Inc.*, 517 U.S. 370, 390 (1996) (quoting *United Carbon Co. v. Binney & Smith Co.*, 317 U.S. 228, 236 (1942)). As one commentator succinctly put it, "[w]ithout clear rules defining the scope of intellectual property protection, potential investors will be deterred from taking the risk of investing in technological innovation." Note, *To Bar or Not to Bar: Prosecution History Estoppel After* Warner-Jenkinson, 111 HARV. L. REV. 2330, 2331 (1998) ("Harvard Note").[5]

The uncertainty and unpredictability inherent in the "flexible bar" approach to prosecution history estoppel caused serious problems in the technology-intensive industries in which we compete. Bringing new products to market requires massive investment in research, development, manufacturing technology, marketing and distribution systems. Given the stakes, the product development process must assess the risk of patent infringement. In many cases, engineers develop new solutions independently and then check whether others may have patents that block the use of those solutions. In others, engineers start with a competitor's product, locate any related patents and then try both to improve on that technology and to design around the patents—a process that patent

---

[5] This Court has often recognized the need for clear legal standards in patent law and other areas. *See, e.g., Pfaff v. Wells Elecs., Inc.*, 525 U.S. 55, 65-66 (1998) (emphasizing the need for a "definite standard" for determining the applicability of the on-sale bar and rejecting a "substantially complete invention" test because it "seriously undermines the interest in certainty"); *Quill Corp. v. North Dakota*, 504 U.S. 298, 315-16 (1992) ("a bright-line rule in the area of sales and use taxes also encourages settled expectations and, in doing so, fosters investment by businesses and individuals"); *Budinich v. Becton Dickinson & Co.*, 486 U.S. 196, 202-03 (1988) (noting the need for a clear rule to define finality for appeals).

law has long encouraged. Whichever way, companies in technology-driven fields regularly ask their patent counsel to study patents and their prosecution histories and render an opinion whether a proposed new design infringes others' patents.

When the scope of prosecution history estoppel varies from "great to small to zero," patent counsel cannot confidently advise that a product will be safe from allegations of infringement. They and their clients instead must assume the worst: no estoppel and a wide range of potentially infringing equivalents. A "flexible bar" thus proves oxymoronic in practice: the extreme elasticity of its application negates the impact of the supposed "bar."

The uncertainty is compounded because under *Warner-Jenkinson* infringement by equivalents is a question of fact, and under current Federal Circuit law that issue is submitted to the jury. Lay juries can easily be confused by the complex and increasingly esoteric technology at the cutting edge of fields such as electronics, biotechnology, aerospace and telecommunications. Even where a product plainly does not literally infringe, companies know they face a serious risk that bewildered jurors nevertheless would find infringement under the doctrine of equivalents. As a result, bringing valuable innovations to market is discouraged.

Whereas the "flexible bar" approach inevitably expands the zone of uncertainty surrounding patents and discourages investment in related technologies, a complete bar rule reduces that uncertainty and encourages investment. As a result of the Federal Circuit's decision in this case, patent counsel finally can advise their clients—unequivocally—that they *can* proceed safely on the assumption that the patentee disclaimed the entire difference between its original claim and the narrower claim issued. Products can be brought to market more quickly and cheaply, and those savings can be passed on to customers.

Of course, in many cases, accused infringers are not aware of patents and their prosecution histories until they are faced with a demand or lawsuit by the patent holder. Even then, however, the unpredictability caused by a "flexible bar" imposes severe costs. Not only is further investment deterred, but the excessive uncertainty results in additional litigation and, often, settlements or damage awards far richer than the merits deserve.

That is because absent clear bounds on the doctrine of equivalents, summary judgment of noninfringement becomes extraordinarily difficult, and when summary judgment is unlikely, weak cases proliferate. Plaintiffs' attorneys prey on the potential for jury confusion. Both sides recognize that jurors may find liability and award damages bearing little relationship to the merits, and that the court will then follow up with a permanent injunction shutting down production. Defendants thus must choose: settle or play Russian roulette. Even the bold that litigate and ultimately prevail find their victories pyrrhic. Patent litigation is extremely time-consuming and expensive: five years from complaint to finality on appeal is typical, and experts' and attorneys' fees (which defendants rarely recover) regularly run to multiple millions of dollars. Those resources are permanently diverted from more productive activities such as developing and marketing new products.

In short, if this Court returns industry to the uncertain world where no one knows whether or how the doctrine of equivalents will apply, the inevitable result will be to discourage productive investment in new technology and to stifle competition—to the detriment of society at large. Competitors should not be subjected to the unpredictability of jury verdicts and the vagaries of how "flexibly" three appellate judges will view the estoppel bar.

To be sure, a complete bar rule will not eliminate all uncertainty in patent law. The doctrine of equivalents will still apply in cases where claims were not narrowed for reasons related to patentability. And liability for literal infringement is not always free from doubt, although it is more predictable.[6] But what prosecution history estoppel should do (and under a complete bar approach will do) is provide a safe harbor in the otherwise uncertain and unpredictable sea of potential infringement under the doctrine of equivalents. The safety of that harbor will be illusory unless prosecution

---

[6] In our experience, advice on literal infringement is far more solid and reliable than opinions on infringement by equivalents. In many cases, how the defendant's product operates is not really disputed, so the question becomes one of claims construction. In theory at least, the claims are supposed to distinctly point out the scope of the invention. *See* 35 U.S.C. § 112. Claims construction is often disputed, but within a narrower range. This Court affirmed in *Markman* that claims construction is an issue for the judges, not juries, to decide, which greatly reduces the degree of uncertainty over literal infringement.

history estoppel completely bars reliance on the doctrine of equivalents in connection with amended limitations.

3. The Intermediate Approach Advocated by the Solicitor General Still Would Result in Unacceptable Uncertainty and Unpredictability

The *amicus* brief of the Solicitor General sets forth forcefully why the "flexible bar" rule had to be rejected and should not be reinstated: the rule was "unworkable," produced an "unacceptably high level of uncertainty" and "did not sufficiently confine the doctrine of equivalents." [U.S. Br. 27, 10, 19] The Solicitor General further explains that because "the conscientious applicant will focus attention on the precise consequences of a narrowing amendment," to limit the scope of equivalents based on those amendments is "just and fair." [*Id.* at 23-24] And he emphasizes that patent applicants "have long been on notice" that narrowing amendments may foreclose access to the doctrine of equivalents. [*Id.* at 24-25 (citing *Exhibit Supply*, 315 U.S. at 136)]

Nevertheless, apparently seeking a middle ground, the Solicitor General proposes erecting a *presumption* of a complete bar and allowing the patent holder to "overcome that presumption by showing a concrete basis, based on the patent prosecution record and relevant to the specific context of the infringement suit, for extending the amended portion of the claim beyond its literal terms to encompass equivalent elements." [*Id.* at 10] The Solicitor General never defines the universe of "concrete bases" that would suffice, instead offering two examples: when "the court finds that the assertedly equivalent element is itself an innovation that was not known to persons of ordinary skill in the art at the time the applicant amended the claim"; and when "the court concludes that, owing to the nature of the subject matter at issue, it was not possible for one of ordinary skill in the art to draft a claim amendment that literally encompassed the allegedly equivalent element while disclaiming the surrendered subject matter." [*Id.* at 25, 26]

The Solicitor General's test, however, is too malleable and open-ended. It fails to address the fundamental flaw in the "flexible" approach: "[t]here is no precise metric to determine what subject matter is given up between the original claim and the amended claim." *Festo*, 234 F.3d at 577. Under his test, courts

still would be required to divine what the patentee surrendered with a narrowing amendment—exactly the exercise the Federal Circuit found unworkable. Equally important, the Solicitor General does not purport to identify all the permissible bases for rebutting the presumption of a complete bar. Patent holders would try to establish additional exceptions for years to come, continuing the uncertainty for all concerned. Cautious patent applicants would have to assume a complete bar when dealing with the PTO, while cautious potential defendants would have to assume that an unknown scope of equivalents would apply despite a narrowing claim amendment. Although designed to combine the best of both worlds, the Solicitor General's test likely would create the worst.

Even if the exceptions were limited to the two specifically listed, the Solicitor General's proposal remains problematic. The English language is extraordinarily versatile, and cases in which a patent applicant cannot craft a line between what is claimed and what is surrendered ought to be quite rare. In litigation, however, enterprising patent holders undoubtedly will try to drive trucks through that seemingly narrow loophole. And while the Solicitor General expresses concern that a surrender by amendment cannot contemplate after-developed technology, he ignores that innovative improvements based on later technology are those that society should least want to deter. By definition, innovators are not the unscrupulous copyists the doctrine of equivalents seeks to capture. Moreover, the exception would engender more uncertainty by leaving to litigation the question whether a particular accused device was based on after-developed technology.[7]

In short, the Solicitor General's attempt to carve out exceptions to a complete bar to accomplish equity in particular cases is understandable, but ultimately the game is not worth the candle.

---

[7] Even if adopted, the Solicitor General's exception would have to be limited to embrace only the rare circumstance where the basic technology in a field had changed so fundamentally that the allegedly equivalent accused technology "did not exist *and was not reasonably within the contemplation of the PTO and the applicant at the time of the claim amendment*." [U.S. Br. 26 (emphasis added)] If instead the exception required only that the accused device itself did not exist, prosecution history estoppel would be nullified, as the requirements of novelty and nonobviousness already bar claims covering preexisting devices.

The loopholes his exceptions would create would simply revive all the problems inherent in the "flexible bar" previously applied.[8]

C. A Complete Bar Rule Reflects the Public's Fair Conclusion that When a Patentee Narrows Its Claims to Obtain a Patent, It Releases Everything Within the Scope of the Original Claims But Not Within the Scope of the Amended Claims

When a patent applicant narrows its claims to gain a patent, the public is fairly entitled to conclude that the applicant has surrendered the entire difference between the original and amended claims. As this Court put it in *Exhibit Supply*, "[b]y the amendment [the patentee has] recognized and emphasized the difference between the two phrases and proclaimed his abandonment of all that is embraced in that difference." 315 U.S. at 136. As a matter of long-settled law, narrowing amendments "must be strictly construed against the inventor and looked upon as disclaimers." *Smith*, 282 U.S. at 790. And as a matter of fairness, a patentee should not be allowed to *re*claim what it *dis*claimed.

Put most simply, a complete bar properly binds the patentee to its bargain with the PTO. A "flexible bar" allows the patentee to renege on that deal on the ground that its release of subject matter was unintentional or not required for patentability. But just as the correctness of an examiner's rejection is irrelevant to prosecution history estoppel, the wisdom and necessity of a particular amendment are also irrelevant. From the public's perspective, the patentee has agreed to be bound by narrower claim language and to abandon the difference to the public domain.

A "flexible bar" approach necessarily allows patentees to reclaim at least some of what they have disclaimed. Indeed, the advocates of that standard expressly argue for a detailed analysis to

[8] The "foreseeable bar" suggested by the Institute of Electrical and Electronics Engineers (IEEE) is another attempted compromise that is doomed to fail. Without resort to litigation, no one will agree on whether "the limiting effect of the language [of an amendment] with respect to an accused device would have been foreseeable at the time of the amendment" [IEEE Br. 4]. The Federal Circuit's "flexible bar" asked whether a "reasonable competitor" would believe the applicant had surrendered the subject matter. The IEEE's "foreseeable bar" test is the same unworkable standard under a different label.

determine exactly what the patentee intended to surrender or was forced to surrender in order to obtain the patent and what intermediate language the patent examiner might have accepted. But what the patentee and examiner would've, could've, should've or might've done is pure speculation. The law should not require or assume that the public reviewing a prosecution history will go through such a tortured analysis. Instead, the law should reflect the common sense conclusion that when a patentee gives up ground to get a patent, it gives up that ground forever. *See Kinzenbaw v. Deere & Co.*, 741 F.2d 383, 389 (Fed. Cir. 1984) (whether or not the patentee needed to specify the radius of a gauge wheel to overcome prior art, prosecution history estoppel applied because the patentee did so; the court properly "decline[d] to undertake the speculative inquiry whether, if [the inventor] had made only that narrowing limitation in his claim, the examiner nevertheless would have allowed it").

D. A Complete Bar Rule Is Not Unfair to Patentees

A complete bar rule will work no unfair hardship.

1. Patentees Are Estopped Only When They Agree to Set New Boundaries on Their Claims

To begin with, prosecution history estoppel can apply only when the patentee, as master of its own claims, makes the deliberate choice to accept narrowed claim language. If an applicant disagrees with the patent examiner's assessment, it is entitled to stand its ground, attempt to traverse the rejection and ultimately appeal if it still cannot convince the examiner. There is no such thing as involuntary prosecution history estoppel.

In most cases, moreover, the applicant drafts the narrowed language, determining what subject matter it is willing to surrender and rewriting its claims accordingly. Bad draftsmanship should be the patentee's problem, not the public's. As a matter of both fairness and efficiency, the patentee is best situated to bear the risk of any uncertainty in the claim language:

> a rule that does not force the patentee, who possesses the best information regarding what the invention is claimed to be, to reveal the limits of an invention places the costs of determining the

> scope of protection afforded by a patent on the public at large. As between the patentee, who reaps the rewards of the possession of a monopoly over the subject matter of an invention, and other inventors, who desire to be able to compete on fair terms with the patentee, the cost of clearly defining the patent scope should fall on the patentee.

Harvard Note, 111 HARV. L. REV. at 2346 (footnotes omitted).

As the Federal Circuit recognized even before *Festo*, "such reasoning places a premium on forethought in patent drafting" and may even increase the cost of patent prosecution somewhat. *Sage Prods., Inc. v. Devon Indus., Inc.*, 126 F.3d 1420, 1425 (Fed. Cir. 1997). But "[g]iven a choice of imposing the higher costs of careful prosecution on patentees, or imposing the costs of foreclosed business activity on the public at large, . . . the costs are properly imposed on the group best positioned to determine whether or not a particular invention warrants investment at a higher level, that is, patentees." *Id.*[9]

2. A Complete Bar Rule Neither Guts the Doctrine of Equivalents Nor Thwarts Its Purpose to Prevent Fraud on a Patent

A complete bar rule will not destroy or undercut the doctrine of equivalents because prosecution history estoppel is narrow. As this Court held in *Warner-Jenkinson* and as the Federal Circuit reaffirmed here, prosecution history estoppel limits application of

[9] Petitioner and its *amici* have repeatedly cited *Control Resources, Inc. v. Delta Electronics, Inc.*, 133 F. Supp. 2d 121 (D. Mass. 2001), but that case proves the point that estoppel is avoidable. The patent there covered a fan speed controller with a "fixed level control signal" corresponding to "half maximum fan speed." The original claim language had required only a "preselected minimum" speed, but the patentee agreed to narrow its claim to the issued language to overcome prior art. The trial court held that the complete bar rule precluded the plaintiff from relying on the doctrine of equivalents, but did so reluctantly because, in its view, the patentee only meant to surrender minimum speeds below half-maximum. *Id.* at 135-37. Regardless of the patentee's intent, however, it *agreed* to the "half maximum" limitation. It could easily have drafted an amendment covering "pre-selected minimum speeds of half-maximum or greater," but it chose not to do so. The public was entitled to take the patentee at its word, and the patentee had no one but itself to blame for the limited scope of the issued patent.

the doctrine of equivalents only when the patentee narrowed the scope of its claims *and* the reason for the amendment related to the requirements for patentability. Prosecution history estoppel will *not* apply when claims are not amended; nor will it apply when claims are amended but not narrowed in scope, or when claims are amended and narrowed but not due to patentability concerns.

In addition, prosecution history estoppel applies only to the particular portion of the claim that was narrowed. If, for example, a claim consists of limitations A, B, C and D, and only limitation C was added or revised during prosecution, then the doctrine of equivalents remains in full force as to limitations A, B and D. Indeed, if limitation C consisted of elements C1, C2 and C3 and the amendment only narrowed the scope of C2, then prosecution history estoppel would apply only to C2, not C1 or C3. *See ACLARA Biosciences, Inc. v. Caliper Techs. Corp.*, 125 F. Supp. 2d 391, 400-03 (N.D. Cal. 2000). As a result, the doctrine of equivalents will continue to enjoy a wide berth even though prosecution history estoppel will serve as a complete bar when that estoppel applies.

The critics of the decision below suggest that "unscrupulous copyists" will come out of the woodwork and duplicate every aspect of a patent except an amended limitation as to which they will make an insubstantial change to avoid literal infringement. In our view, that concern is overblown. Intel, Cypress and UTC have broad patent portfolios. We have found "unscrupulous copying" to be relatively rare and almost always captured by the literal scope of our patent claims. Perhaps most importantly for present purposes, we have seen no upsurge in such activity since the Federal Circuit's adoption of the complete bar rule a year ago. Petitioner and its *amici* point to no empirical evidence either.

Of course, there may be rare instances of such copying in the future. But that small number of cases pales in comparison to the much larger and more important number where defendants have been and would be accused of infringement despite substantial innovations and use of significantly different technology. The patent system encourages designing around patents. *See Bonito Boats, Inc. v. Thunder Craft Boats, Inc.*, 489 U.S. 141, 147 (1989) (the patent laws "recogni[ze] that imitation and refinement through imitation are both necessary to invention itself and the very lifeblood of a competitive economy"). Yet the "flexible bar" test

necessarily deterred innovators from designing around patents and exploiting what fairly appeared to remain in the public domain.[10]

3. Past Patentees Could Not Reasonably Rely on Any Range of Available Equivalents Because the Scope of Estoppel Was Always Uncertain

Petitioner and its *amici* also grouse that the decision below unfairly deprives them of a range of equivalents that they had expected to own under the "flexible bar" line of cases. Those complaints, however, ignore history.

Exhibit Supply certainly indicated a complete bar rule, and some circuits had expressly so held in the days before the Federal Circuit [*see Hughes*, 717 F.2d at 1362]. After that circuit was born, two irreconcilable lines of authority emerged. *See Festo*, 234 F.3d at 572-74. The *Kinzenbaw* line of cases strictly applied estoppel and refused to speculate whether an examiner might have allowed a broader claim. And even under the more liberal *Hughes* line of "flexible bar" cases, the scope of estoppel was variable. Results accordingly varied, but often the Federal Circuit ultimately held that prosecution history estoppel applied anyway.[11]

The reality was that *no one*—not patent holders, not potential accused infringers and not the public at large—could confidently

[10] In addition to arguing that a complete bar guts the doctrine of equivalents, petitioner suggests that it negates *Warner-Jenkinson*'s rebuttable presumption by turning it into an irrebuttable one. But like Judge Newman below, petitioner conflates two distinct issues. *Warner-Jenkinson* established a rebuttable presumption as to the threshold question whether an amendment should be treated as patentability-related. Under *Warner-Jenkinson*, that fact question determines whether prosecution history estoppel comes into play at all. The question here is a separate, logically subsequent and purely legal question: the *scope* of prosecution history estoppel *given* that the threshold requirements for estoppel are met.

[11] *See, e.g., KCJ Corp. v. Kinetic Concepts, Inc.*, 223 F.3d 1351, 1359-60 (2000); *Augustine Med., Inc. v. Gaymar Indus., Inc.*, 181 F.3d 1291, 1300-01 (1999); *EMI Group N. Am., Inc. v. Intel Corp.*, 157 F.3d 887, 897-98 (1998); *Bai v. L & L Wings, Inc.*, 160 F.3d 1350, 1356 (1998); *Wang Labs., Inc. v. Mitsubishi Elecs. Am., Inc.*, 103 F.3d 1571, 1577-78 (1997); *Wang Labs., Inc. v. Toshiba Corp.*, 993 F.2d 858, 867-68 (1993); *Environmental Instruments, Inc. v. Sutron Corp.*, 877 F.2d 1561, 1565-66 (1989); *Diversitech Corp. v. Century Steps, Inc.*, 850 F.2d 675, 680-81 (1988); *Townsend Eng'g Co. v. HiTec Co.*, 829 F.2d 1086, 1090-92 (1987).

predict the scope of prosecution history estoppel before the Federal Circuit's decision in this case. No reasonable patent prosecutor could agree to narrow a claim and still expect to rely on any particular scope of equivalents outside the scope of the amended claim. Accordingly, when valuing portfolios, reasonable patentees have always focused on the literal scope of the claims, rather than an uncertain range of equivalents.

At best patent holders could have hoped to exploit the unpredictability of the scope of equivalents to extort settlements from risk-averse defendants. But this Court should have no solicitude for patentees who simply were taking advantage of uncertainty of their own making. As Judge Lourie pointed out, "The only settled expectation . . . [was] the expectation that clever attorneys [could] argue infringement outside the scope of the claims all the way through [the Federal Circuit]." *Festo*, 234 F.3d at 596 (Lourie, J., concurring). And that expectation has properly been unsettled.[12]

E. Making Prosecution History Estoppel a Complete Bar Can Only *Improve* Patent Prosecution Practice

Petitioner, its *amici* and the dissenters below have proffered a parade of patent prosecution horribles that supposedly will result from a complete bar rule. Few of those fears were raised in the *en banc* briefing, and even now the anguish arises primarily from patent lawyer groups with parochial concerns. More telling is that the Solicitor General, representing the PTO, urges the Court to presume a complete bar, which would provide nearly the same incentives as the decision below. In fact, if a complete bar rule changes patent prosecution practice at all, those changes will be *positive*.

1. Claiming Could Change Only for the Better

The patent lawyer *amici* bemoan that a complete bar rule will force them to change their strategy of claiming overly broadly and then negotiating concessions with the PTO examiner over the course of several rounds. If so, that is all to the good. If a com-

[12] To the extent the concern is settled expectations of the *PTO*, Judge Lourie provided the proper answer to that as well. The PTO decides patentability based on the claims presented, the disclosure made and the known prior art. The prospect of later infringement claims based on the doctrine of equivalents does not enter into the calculus. *Festo*, 234 F.3d at 596-97.

plete bar rule encourages applicants to draft narrower claims more properly reflecting their inventions in order to avoid later amendments, that will protect the public domain and presumably shorten the application process. Likewise, if applicants take more care to draft clearer claims, the result also will only improve the quality of issued patents and increase certainty about their scope. Overaggressiveness and sloppiness by patent applicants and their counsel are nothing the patent laws should encourage.

Some *amici* also complain that they will be required to conduct more thorough prior art searches before applying, again to avoid having to narrow their claims later. If so, that again would only be beneficial, both to the public and patentees. Patentees, not examiners, are in the best position to uncover relevant prior art, and patentees benefit by having their patents presumed valid over art uncovered in such searches. Searches by applicants also would alleviate the burden on examiners that these same *amici* decry. In any event, the increased cost is overstated because Internet databases have made prior art searching easier than ever before.

In the end, patent prosecutors who believe *Festo* will affect their practices can adjust to the complete bar. And they have: despite the hysteria that greeted the *Festo* decision, the patent prosecution world has not fallen apart since it issued nearly a year ago.

2. Even If Applicants Challenge More Rejections, Patents' Scope Should Be Decided in Advance by Presumptively Expert PTO Examiners Rather than Years Later in Patent Litigation

The second major practical objection to the complete bar rule is that the stakes of amending will be higher, resulting in more appeals of examiners' rejections and a slower application process. That objection, however, is flawed in principle. The PTO is charged by law with determining patentability. The Federal Circuit deferentially reviews PTO rejections of patents [*see Dickinson v. Zurko*, 527 U.S. 150 (1999)], and issued patents are presumed valid [35 U.S.C. § 282]. Given the PTO's expertise, decisions about the enforceable scope of patents should be made by the PTO to the extent possible. Such decisions should not be systematically deferred to generalist courts or, worse, befuddled lay juries.

3. Inventions Will Not Be Discouraged Because Pioneer Claims Rarely Require Amendments and Non-Pioneer Claims Should Receive a Narrow Range of Equivalents to Begin With

Finally, petitioner speculates that inventors will abandon patents altogether and rely on trade secret protection, all because prosecution history estoppel will be a complete bar to the doctrine of equivalents as applied to particular amended claim limitations. Petitioner and its *amici* cite no empirical evidence supporting this startling assertion, and it is implausible on its face.

For most apparatus inventions and many method claims, trade secret protection is not feasible because the invention could be copied as soon as the product or process is publicly revealed. (The rodless cylinders in this case are a fine illustration.) Even for inventions where both trade secret and patent protection are viable, it defies credulity to suggest that the choice would be based on the possibility that, years down the road, prosecution history estoppel might apply and partially preclude reliance on the doctrine of equivalents in litigation against some unknown alleged infringer.

The concern that "pioneer inventions" would be discouraged is particularly baseless. By definition, pioneer inventions are those involving the greatest advancement over the prior art. They are, therefore, the ones where narrowing amendments to avoid prior art are least likely. *See Augustine Med., Inc. v. Gaymar Indus., Inc.*, 181 F.3d 1291, 1301-02 (Fed. Cir. 1999); Harvard Note, 111 HARV. L. REV. at 2346 n.114. The issue is far more likely to arise with nonpioneer inventions (modest innovations made in crowded fields), but those inventions should be accorded a narrow range of equivalents in any event. *See Warner-Jenkinson*, 520 U.S. at 27 n.4; *Perkin-Elmer Corp. v. Westinghouse Elec. Corp.*, 822 F.2d 1528, 1532 (Fed. Cir. 1987).

In the end, Intel, Cypress and UTC are active patent applicants, licensors and enforcers. If a complete bar rule portended doomsday for patents as petitioner suggests, we would oppose it. In fact, the complete bar rule has improved the patent system by increasing the predictability of patent scope, fairly balancing the interests of patentees and the public (including other inventors), and encouraging better prosecution practice. It should be affirmed.

II. PROSECUTION HISTORY ESTOPPEL SHOULD APPLY TO ALL AMENDMENTS NARROWING CLAIMS FOR PATENTABILITY REASONS, NOT JUST AMENDMENTS TO AVOID PRIOR ART

Eleven of the twelve judges of the Federal Circuit agreed that "a narrowing amendment made for any reason related to the statutory requirements for a patent will give rise to prosecution history estoppel with respect to the amended claim element." *Festo*, 234 F.3d at 566. Even the lone dissenter, Judge Newman, concurred that "estoppel may arise on substantive grounds of patentability in addition to those of [35 U.S.C.] § 102 and § 103" and that "parts of § 112 may also give rise to estoppel." *Id.* at 634. The court of appeals was correct in so holding, and this Court should reject petitioner's argument that only amendments expressly designed to overcome prior art can trigger estoppel.[13]

A. The Logic of Prosecution History Estoppel Extends to Narrowing Amendments Made to Fully Describe and Distinctly Claim an Invention or Establish Its Utility

This Court has never limited the application of prosecution history estoppel to amendments made to overcome prior art. *See Crawford v. Heysinger*, 123 U.S. 589, 606 (1887) (prosecution history estoppel arose from amendments to overcome an operability/utility rejection). And the logic and policy behind the estoppel fully apply to other forms of amendments.

Once again, prosecution history estoppel shores up the notice function of the patent claims, telling the public what the patentee has not claimed and confirming that it is safe to practice within that safe harbor. That is so regardless of whether the amendment was spawned by invalidating prior art or by the original language's

[13] Petitioner also raises two arguments nowhere suggested by the questions presented in its petition. Even if properly raised, they have no merit. *First*, discerning "voluntary" from "involuntary" amendments is impossible and pointless. An applicant should not escape estoppel simply by preempting a rejection with its own amendment. A surrender is no less real when the applicant unilaterally recognizes the patentability problem. *Second*, rebuttal of *Warner-Jenkinson*'s presumption that unexplained amendments are patentability-related should be based on the public record. Unexpressed private rationales should not count because the public has only the file wrapper. The old "flexible bar" test itself purported to turn on a reasonable competitor's construction of the objective record.

failure to adequately describe and distinctly claim the invention. Prosecution history estoppel also prevents the patentee from unfairly reclaiming what it agreed to give up. The same logic applies regardless of the statutory section underlying the amendment—as long as the amendment truly narrowed the claim and did so to satisfy the conditions of patentability. *See Festo*, 234 F.3d at 567.

Petitioner resorts to formalism in objecting that *Warner-Jenkinson* referred to "substantial reason[s] related to patentability" and that Sections 101-103 appear in a chapter entitled "Patentability of Inventions" while Section 112 appears in a chapter entitled "Application for Patent." This Court, however, was focused on whether an amendment was made to obtain a patent, not on chapter headings. Fully describing one's invention, disclosing the best known mode of practicing it and distinctly claiming it are substantial and substantive requirements for patentability just as much as utility, novelty and nonobviousness. Courts regularly invalidate patents for failure to comply with Section 112, and such patents are no less dead letters than those invalidated in light of prior art.

B. An Exception for Section 112 Amendments Would Swallow the Rule, Allowing Clever Applicants to Evade Estoppel and Reclaim What They Have Disclaimed

Petitioner's blanket exception for Section 112 amendments would also result in serious practical problems. Patent lawyers are clever. If told that prior art-related amendments will result in estoppel while "clarifications to more distinctly claim and point out the invention" under Section 112 will not, they will denominate virtually all their amendments as such "clarifications."

Indeed, many patent lawyers have tried this gambit in the past, and the courts have properly stood vigilant against attempts to evade prosecution history estoppel in this way. As the Federal Circuit put it in *Loral Fairchild Corp. v. Sony Corp.*, "[a]n applicant may not avoid the conclusion that an amendment was made in response to prior art by discussing the amendment under the rubric of a clarification due to a § 112 indefiniteness rejection." 181 F.3d 1313, 1326 (1999), *cert. denied*, 528 U.S. 1075 (2000). "If that were permitted amendments made in response to a § 102 or § 103 rejection would tend to be disguised as responding to the § 112 rejection in an attempt to avoid the creation of prosecution history

estoppel." *Id.; see also Bai v. L & L Wings, Inc.*, 160 F.3d 1350, 1355 (Fed. Cir. 1998) (rejecting an applicant's attempt to minimize an amendment by relying on a "boilerplate remark" that the amendment was simply designed to "specifically and expressly recite the structural details" of his invention).

Petitioner's invitation to further mischief should be rejected.

C. Prosecution History Estoppel Should Depend on the Substance of an Amendment, Not on Its Form

We are not suggesting, and the Federal Circuit did not hold, that every Section 112 amendment clarifying the scope of a claim will result in prosecution history estoppel. True clarifications or technical or grammatical corrections that do not narrow the substantive scope of a claim do not and should not result in estoppel. *See, e.g., Turbocare Div. v. General Elec. Co.*, 264 F.3d 1111, 1125-26 (Fed. Cir. 2001) (no estoppel because patentee's amendment did not truly narrow the claim).

Conversely, however, an amendment should not automatically avoid estoppel simply because it does not take the classic form of an added limitation to a particular pending claim. In all cases, the test for estoppel should depend on the *substantive effect* of an amendment, rather than its form or formal basis.

The Federal Circuit's post-*Festo* holding in *Mycogen Plant Science, Inc. v. Monsanto Co.*, 252 F.3d 1306, *reh'g denied*, 261 F.3d 1345 (2001), provides an excellent illustration. In that case, the applicant did not formally amend its initial claims. Instead, it cancelled its initial claims and replaced them with narrower claims (which had been present as dependent claims in the original application), and those narrower claims issued. Nevertheless, the Federal Circuit properly held that prosecution history estoppel applied. As the court observed, distinguishing the two "would place form over substance and would undermine the rules governing prosecution history estoppel laid out in *Festo* by allowing patent applicants simply to cancel and replace claims for reasons of patentability rather than to amend them." 252 F.3d at 1320.[14]

[14] The Solicitor General suggests (at 16) that merely rewriting a dependent claim as an independent one will not in itself create prosecution history estoppel. *Mycogen*, however, confirms that *canceling* an independent claim and *replacing* it with a narrower, formerly dependent claim *can* create an estoppel. *See* 261 F.3d at 1349 ("cancellation of a claim and replacement with another claim having an added limitation had the effect of narrowing the scope of the original claim . . . with respect to the limitation that was in effect added to the original claim").

In affirming here, this Court too should emphasize that prosecution history estoppel turns on whether, from an objective standpoint, the patentee substantively narrowed the scope of its claims for a reason related to patentability. It does not turn on the particular form, format or declared statutory basis for the change.

III. The Court's Ruling Should Apply Universally and Should Not Be Limited to Prospective Application

Finally, several of petitioner's *amici* argue that if this Court affirms, the rule it announces should apply purely prospectively. Those *amici* apparently suggest that a complete bar rule should apply to claim amendments after the date of decision, while a "flexible bar" should apply to earlier ones. That result would require a double rule of decision and would extend the confusion over how a "flexible bar" applies for decades. Moreover, even ignoring those serious practical problems, this case simply is not a proper candidate for purely prospective application.

To begin with, this Court still has not resolved whether purely prospective decisionmaking is consistent with the constitutional role of the judiciary. The "normal rule" is that judicial decisions are fully retroactive, applicable to all pending and future cases. *Harper v. Virginia Dep't of Taxation*, 509 U.S. 86, 97 (1993). It is also settled that selective prospectivity is forbidden: "When this Court applies a rule of federal law to the parties before it, that rule is the controlling interpretation of federal law and must be given full retroactive effect in all cases still open on direct review, as to all events regardless of whether such events predate or postdate [the] announcement of the rule." *Id.* In *Chevron Oil Co. v. Huson*, 404 U.S. 97 (1971), the Court recognized the possibility of purely prospective rulings in extraordinary cases, but the continuing vitality of that doctrine remains in doubt as members of the Court have questioned its compatibility with the judicial function of declaring what the law is rather than deciding what it should be. *See, e.g., Harper*, 509 U.S. at 107 (Scalia, J., concurring).

The debate over the propriety of purely prospective judicial decisions can wait for another day. In this case, the complete bar approach to prosecution history estoppel would not qualify for prospective treatment even under the three-part test of *Chevron Oil*:[15]

First, a "decision to be applied nonretroactively must establish a new principle of law, either by overruling clear past precedent on which litigants may have relied, or by deciding an issue of first impression whose resolution was not clearly foreshadowed." *Chevron Oil*, 404 U.S. at 106 (citations omitted). Here, *Festo* did not resolve issues of first impression, and the pre-*Festo* precedent offered as much support for a complete bar as a "flexible" one. *Exhibit Supply* indicated a complete bar, and *Warner-Jenkinson* similarly held that an estoppel serves to "bar the application of the doctrine of equivalents" as to the affected limitation. 520 U.S. at 33. In the lower courts, the circuits had split before the Federal Circuit's first decision in *Hughes*, two competing and contradictory lines of precedent continued after *Hughes*, and even under *Hughes*'s "flexible bar" the scope of the estoppel varied from "great to small to zero." In short, until this case no one knew what, if any, equivalents remained after a narrowing amendment.

Second, Chevron Oil "look[ed] to the prior history of the rule in question, its purpose and effect, and whether retroactive operation will further or retard its operation." 404 U.S. at 107 (citation omitted). In this case, the "flexible bar" was inconsistently applied, and a complete bar is the only coherent way for prosecution history estoppel to accomplish its twin goals of promoting predictability and preventing inequity. The term of most patents is twenty years. If the complete bar is applied purely prospectively, competitors will labor under uncertainty, and patentees will unfairly exploit that uncertainty, for two more decades.

Third, Chevron Oil "weighed the inequity imposed by retroactive application . . . ." *Id.* Once again, past patentees could not have relied on any particular scope of equivalents under the "flexible bar" approach. If applicants proposed narrowing amendments

[15] Even petitioner's *amici* do not appear to suggest that applying prosecution history estoppel to all kinds of narrowing amendments for patentability reasons worked such a change in law that the rule must be applied purely prospectively.

with the expectation of reneging on those agreements and making broader claims in litigation, they acted at their own peril.

In short, *Festo* undoubtedly refined the law of prosecution history estoppel and will rein in the doctrine of equivalents somewhat. But so did this Court's adoption of a rebuttable presumption of prosecution history estoppel in *Warner-Jenkinson*, and no one has seriously suggested that that decision could only be applied to future claim amendments. In both cases, the courts clarified the confusing jurisprudence and appropriately balanced the competing interests. The rules they adopted must apply to everyone equally.

Conclusion

The judgment and rationale of the Court of Appeals should be affirmed.

October 31, 2001.

Respectfully submitted,

Terry E. Fenzl
Counsel of Record
Alan H. Blankenheimer
Howard Ross Cabot
Dan L. Bagatell

BROWN & BAIN, P.A.
2901 North Central Avenue, Suite 2000
Phoenix, Arizona 85012-2788
(602) 351-8000

Counsel for Amici Curiae
Intel Corporation, Cypress Semiconductor Corporation and United Technologies Corporation